RK ROSE+KRIEGER

A Phoenix Mecano Company

Profile Technology BLOCAN®

Assembly system without machining



How to use this catalogue

If you are new to profile technology

Please use our selection guide from page 9 onwards.
We will guide you to the right product for your particular application.

If you know all about profile technology

You will know exactly what you require and can go straight to the right product category, where you will find a product overview on the first page.

Specific search

If you are looking for a specific product, we suggest you start in our index on the last pages of this catalogue.

from page 4 **Introduction**

About us
Our products
Service
Level of service

from page 9 **Profile Technology selection guide**

High-calibre combinations
(What is Profile Technology?)

Three steps to your recommended product
(How do I find the right product?)

from page 22 **Structural profiles**

With slots on all sides
Stable, versatile structures

from page 174 **Functional profiles**

Visible, frame, special profiles
Added visual and functional value

from page 376 **Heavy duty profiles**

Heavy loads with maximum stability

from page 408 **Safety guards**

from page 466 **RK Easywork**

Assembly workstation system

from page 480 **Appendix**

Tools
Fax enquiry
Application examples
Index

About us

As a subsidiary of the global Phoenix Mecano AG, we offer an unrivalled range of products in the field of linear, profile, connecting and module technology. With decades of experience and expertise in a huge range of industrial applications, you need look no further for a highly competent partner. From the first point of contact through to delivery, we focus entirely on your requirements. Individual advice and short delivery periods are two central priorities of our customer-focused corporate philosophy. We want our customers to share in our success and look forward to being your strategic partner.



Head Office: Germany, Minden / Westph.

- Company sales representatives
- Distributors and system partners

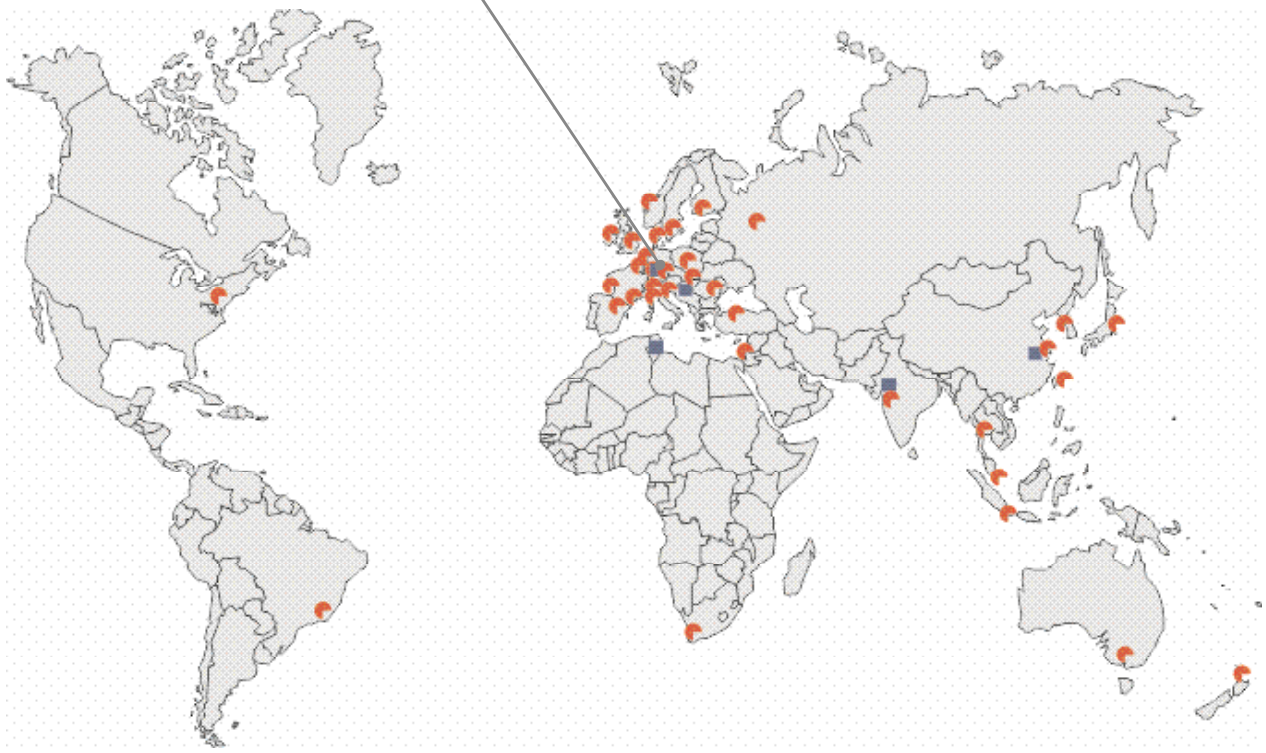

Available around the globe.

- Profit Centre within Phoenix Mecano
- Sales and system partners
- ■ = Production facilities
- ◔ = Distribution companies

Our product ranges

CONNECTING TECHNOLOGY

- Fittings for the secure clamp connection of round and square tubes
- Elements made of aluminium, stainless steel and plastic
- Sizes from 8 mm to 80 mm



PROFILE TECHNOLOGY

- The tried and tested BLOCAN® aluminium assembly
  system, with profiles offering cross-sections from 15 mm to 320 mm, for a broad spectrum of applications
- Connecting technology with an unsurpassed combination of flexibility and reliability

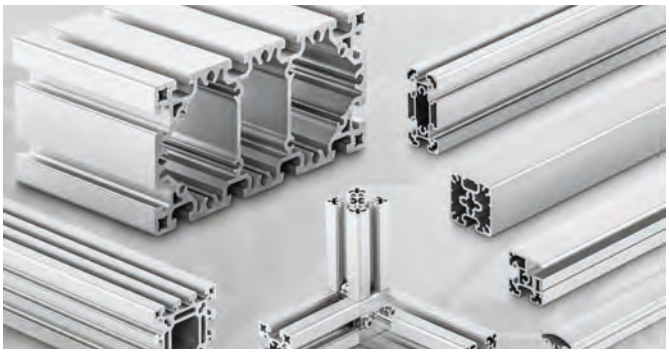

LINEAR TECHNOLOGY

- Linear axes
- Manual guide units
- Electric cylinders
- Lifting columns
- We can move loads for you of up to 3 t and 12 m dynamically, reliably and with great precision



MODULE TECHNOLOGY

- We develop, manufacture and assemble
- Machine frames
- Workstations
- Machine guards
- Multidimensional linear axis modules
- Complete drive solutions

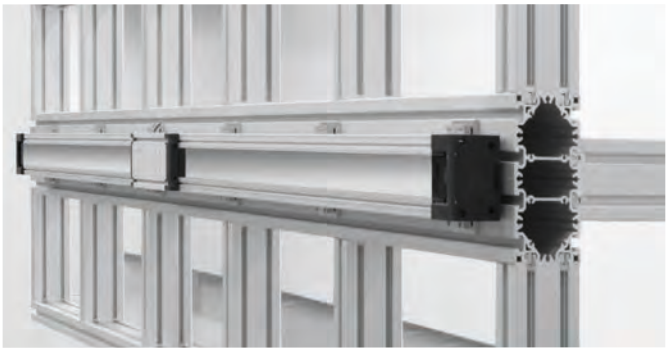

What we can do for you

We help you make the right choice:

CAD component library

To help you design your products, we give you free access to the component data stored in our Rose+Krieger component library (drawings, technical descriptions), where you can choose between around 60 different file formats (2D/3D). The link to our component server can be found on our web site at: www.rk-rose-krieger.com/deutsch/service/cad-daten.html

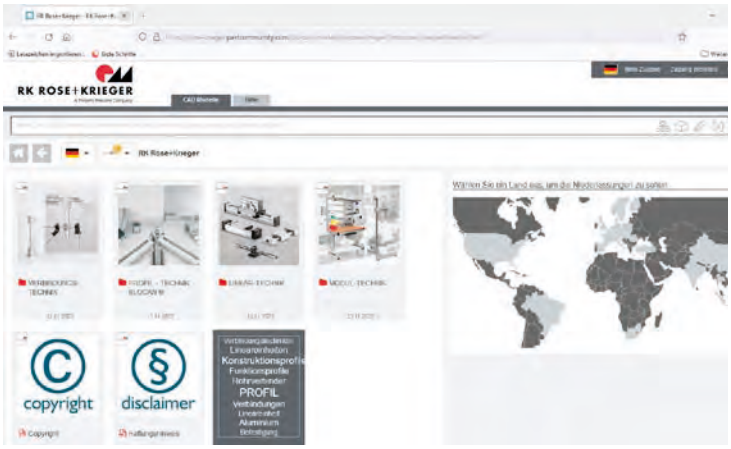

In-house RK product consultancy

The RKinfovan – our showroom on your doorstep. With more than 20 presentation boards containing exhibits and functional samples and a range of applications from the world of drive and linear technology, our infovan provides a complete cross-section of the RK products currently available.
Our Key Account managers and sales consultants are happy to visit you on site and help you draw up practical solutions.





RK website: www.rk-rose-krieger.com

At our website you will find a wealth of information on our company and our products. You will also find the details of company contacts in your area and the latest catalogues (PDF format) available to download.

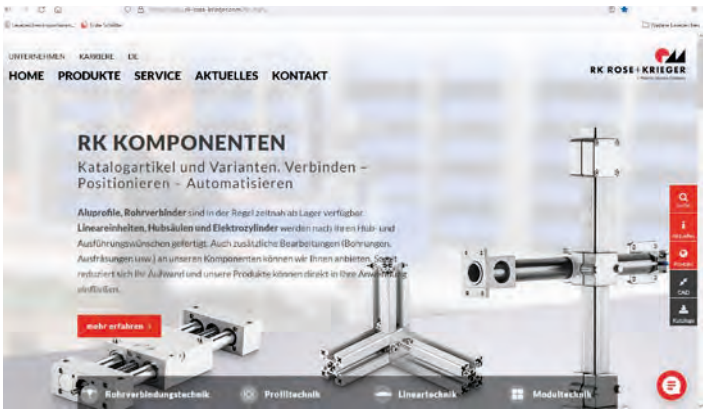

If you want to focus your resources on other tasks and are looking for an expert partner you can rely on, our specialists will work closely with you to develop tailor-made solutions. If you wish, we can also assemble and commission the units on site.

You make a sketch of your requirements.

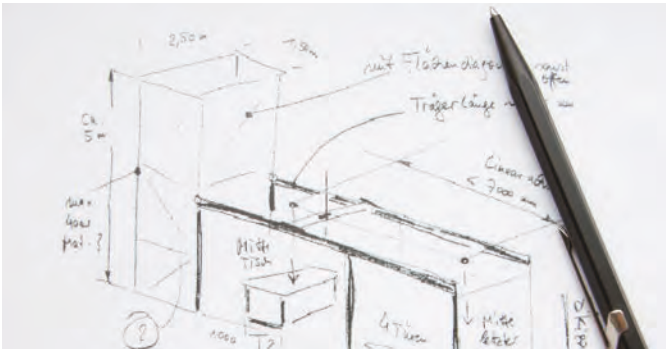

Our product specialists will develop a solution for you.



We can deliver your turnkey solution or assemble and commission it for you on site.



Selection guide

Level of service

You decide...

100%



Modules and systems
You require your skills and time for other tasks and are looking for a partner you can rely on.



Customised developments
Are you looking for something completely new? Then we will team up with you to develop it.

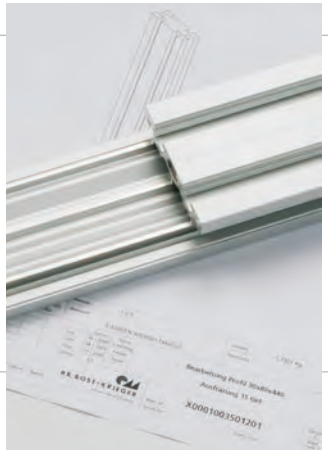

Different models, modified standards
Our expertise at your fingertips. Our expert consultants can recommend the optimum products modified to your requirements.



Catalogue items
If you know what you want and take the time to browse our catalogue, you are sure to find what you're looking for in our standard range.

...what level of service you require

0%

We offer

- A broad range of compatible products
- 40 years of experience in numerous industries
- Expert advice for all your requirements
- Quality – because we deliver what we promise



Contents

What is Profile Technology ..... p. 10

How to find the right product ... p. 11

The RK profile circle ..... p. 12

Structural profiles ..... p. 14

Functional profiles ..... p. 16

Heavy duty profiles ..... p. 18

Safety guards ..... p. 20

RK Easywork assembly workstation system ..... p. 21

High-calibre combinations

The true calibre of a profile is characterised not by the profile itself but in the connection of the profiles to one another. Our years of application experience have enabled us to develop an industrial aluminium profile system that leaves almost nothing to be desired. Boundless creativity, maximum flexibility and proven reliability offer a broad spectrum of possible solutions for the task in question. You can utilise all the benefits of our system – in particular the option for connection of profiles without the need for mechanical machining. A system is the sum of all its parts, and a successful system is based on strong individual parts.

And to help you select the most suitable range of products for your requirements quickly and easily, we have developed a system that is strictly task-oriented. Within the selected range, you can then determine the ideal size and model based on your performance requirements.

And if you need any further help, we are only too happy to assist.

No need for drill holes...



these are held together without!



How to find the right product

The three steps to your product recommendeation

Step 1:



Your application takes centre stage

- Stable, versatile structures
- Added visual and functional value
- Heavy loads with maximum stability

Step 2:



Which dimension do you need?

- Stability
- Section modulus
- Mass optimization

Step 3:

Which function do you need?

- Configuration (square, rectangular, rounded, angular)
- Number of slots
- Easy assembling
- Additional functions: visible design or frame profiles

…follow our system and the terms are self explanatory.

The RK profile circle



Stable versatile structures

- Fixing slots on all sides
- Unlimited applications
- Minimal design effort
- Cost optimisation

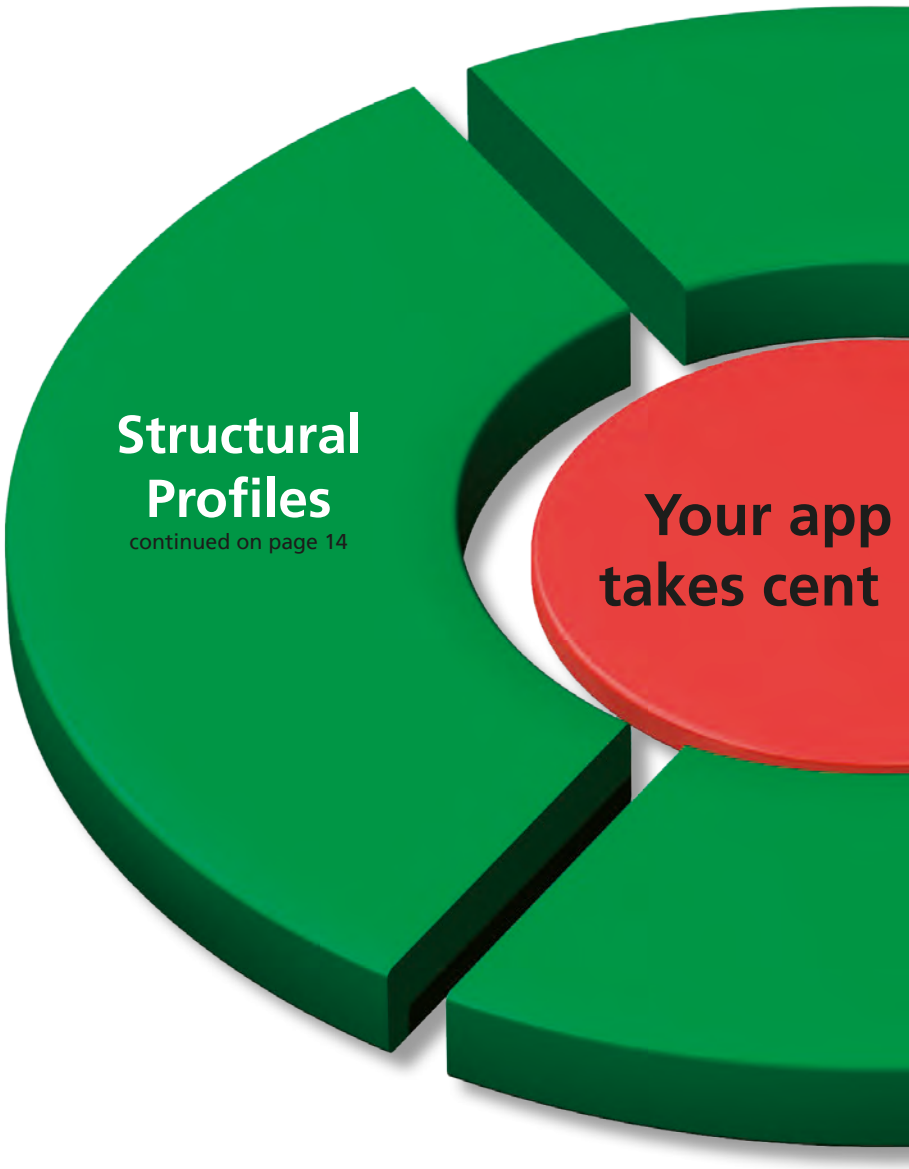

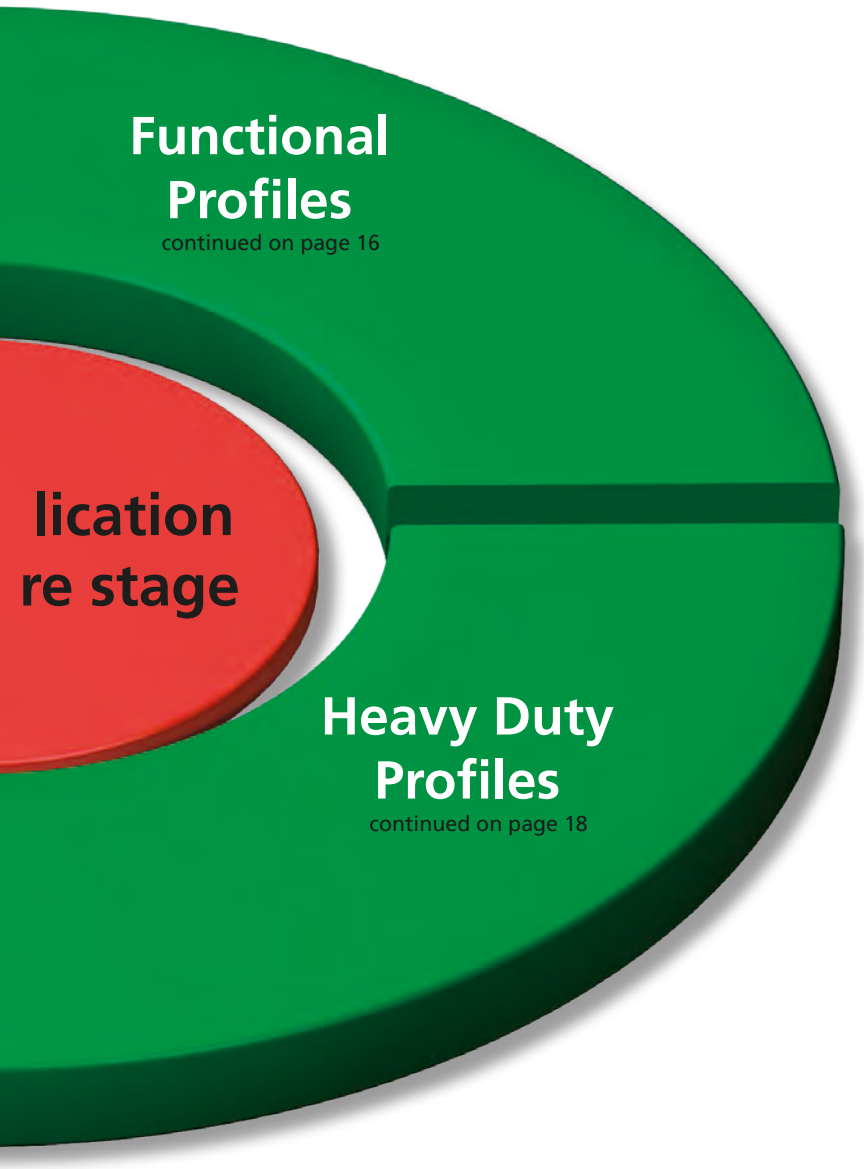



Additional visual and functional benefit

- Attractive design
- Many additional functions
- Flexible



Heavy duty with highest stability

- High dynamic
- Large structures
- Easily transportable

Structural profiles

Stable versatile structures

A variety of profile geometries and sizes allows optimal adaptation to prevailing technical and economic conditions. The Structural profiles set their focus on optimal connection options (slots on all sides) and the associated unlimited application options. The BLOCAN® Profile System, which is made from aluminium, offers consistent flexibility and cost-efficiency. By adapting the relevant profile size to the load to be borne, it is possible to create a technically correct design which is also optimally cost-effective. With such a broad spectrum of profile cross-sections and a comprehensive range of accessories, no task is beyond the realms of possibility.

Structural Profiles				
Size 30	 **F-30x30** Wx= 2,2 cm3 Wy= 2,2 cm3	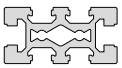 **F-30x60** W_x= 5,3 cm^3 W_y= 9,9 cm^3	 **F-30x80** W_x= 7,0 cm^3 W_y= 16,9 cm^3	
Size 40	 **F-40x40** W_x= 5,5 cm^3 W_y= 5,5 cm^3	 **F-40x40-L** W_x= 3,6 cm^3 W_y= 3,6 cm^3	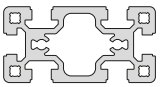 **F-40x80** W_x= 11,3 cm^3 W_y= 22,2 cm^3	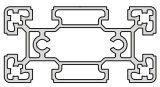 **F-40x80-L** W_x= 7,4 cm^3 W_y= 15,7 cm^3
Size 50	 **F-50x50** W_x= 11,6 cm^3 W_y= 11,6 cm^3	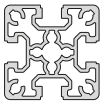 **F-50x50-L** W_x= 9,0 cm^3 W_y= 9,0 cm^3		
Size 60	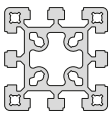 **F-60x60** W_x= 17,1 cm^3 W_y= 17,1 cm^3	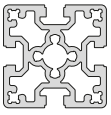 **F-60x60/1** W_x= 18,1 cm^3 W_y= 18,1 cm^3	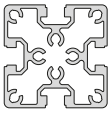 **F-60x60-L** W_x= 14,1 cm^3 W_y= 14,2 cm^3	
Size 80	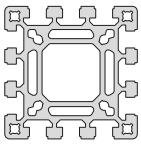 **F-80x80** W_x= 38,8 cm^3 / W_y= 38,8 cm^3	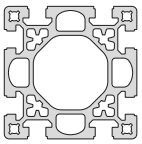 **F-80x80/2** W_x= 38,4 cm^3 W_y= 38,4 cm^3	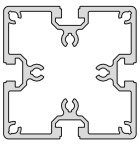 **F-80x80-L** W_x= 28,8 cm^3 W_y= 28,8 cm^3	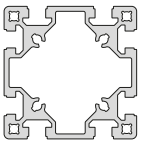 **F-80x80/2-L** W_x= 36,1 cm^3 W_y= 36,1 cm^3

Structural Profiles			
Size 30	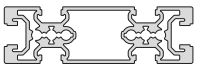 **F-30x120** W_x= 10,2 cm³ W_y= 36,6 cm³	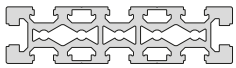 **F-30x120** W_x= 10,2 cm³ W_y= 36,6 cm³	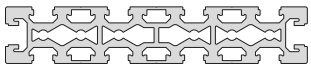 **F-30x160** W_x= 13,3 cm³ W_y= 64,1 cm³
Size 40	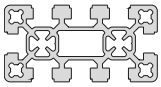 **F-40x80/3** W_x= 10,0 cm³ W_y= 19,7 cm³	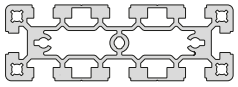 **F-40x120** W_x= 14,7 cm³ W_y= 42,2 cm³	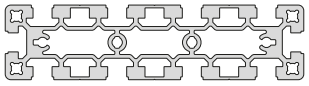 **F-40x160** W_x= 19,9 cm³ W_y= 72,4 cm³
Size 50	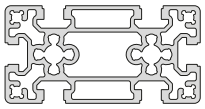 **F-50x100** W_x= 17,6 cm³ W_y= 36,1 cm³		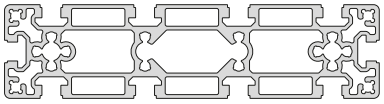 **F-50x200** W_x= 32,1 cm³ W_y= 122,4 cm³
Size 60		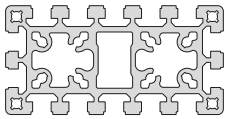 **F-60x120** W_x= 31,5 cm³ W_y= 62,0 cm³	
Size 80	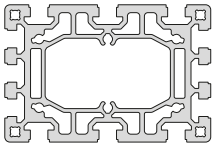 **F-80x120** W_x= 60,6 cm³ W_y= 83,5 cm³	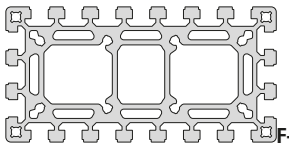 **F-80x160** W_x= 77,4 cm³ W_y= 140,9 cm³	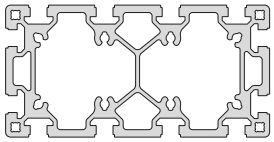 **F-80x160-L** W_x= 72,8 cm³ W_y= 128,1 cm³
Size 100/120	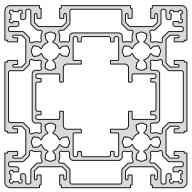 **F-100x100** W_x= 60,8 cm³ W_y= 60,8 cm³	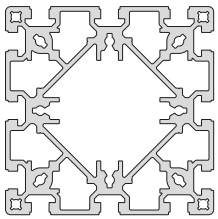 **F-120x120** W_x= 110,8 cm³ W_y= 110,8 cm³	

Functional profiles

Additional visual and functional benefit

Rather than merely offering the Structural profiles (with slots on all sides), a modern aluminium profile system should also be able to offer a range of profiles which is functional and visually attractive. Without losing sight of RK Rose+Krieger's philosophy (connection without machining), we have incorporated a series of functional and special profiles made from aluminium into our product portfolio which fulfil this requirement.

We have divided the so-called "functional profiles" into three sub-categories. Depending on the profile geometry, the visible, frame and special profiles can be assembled using the appropriate connecting technology, and no further machining of the profiles is required whatsoever. Cut the profiles to length and assemble, and reduce the effort required for planning and assembly to a minimum in the process!

Visible design profiles									
Size 30	 **F-G 30x30** W_x= 2,1 cm³ W_y= 2,1 cm³	 **F-GG 30x30** W_x= 2,1 cm³ W_y= 2,1 cm³	 **F-2G 30x30** W_x= 2,2 cm³ W_y= 2,4 cm³	 **F-3G 30x30** W_x= 2,2 cm³ W_y= 2,4 cm³	 **W 30-30°** W_x= 1,5 cm³ W_y= 1,8 cm³	 **W 30-45°** W_x= 1,4 cm³ W_y= 1,7 cm³	 **W 30-60°** W_x= 1,8 cm³ W_y= 1,9 cm³	 **W 30-90°** W_x= 2,9 cm³ W_y= 2,9 cm³	 **F-R 30** W_x= 1,2 cm³ W_y= 1,2 cm³
Size 40	 **F-G 40x40** W_x= 4,8 cm³ W_y= 4,9 cm³	 **F-GG 40x40** W_x= 4,8 cm³ W_y= 4,8 cm³	 **F-2G 40x40** W_x= 4,6 cm³ W_y= 4,7 cm³	 **F-3G 40x40** W_x= 4,8 cm³ W_y= 4,9 cm³	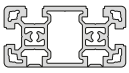 **F-G 40x80** W_x= 10,4 cm³ W_y= 20,6 cm³	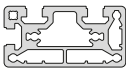 **F-GG 40x80** W_x= 10,7 cm³ W_y= 22,0 cm³			
	 **4G-40x40** W_x= 5,2 cm³ W_y= 5,2 cm³	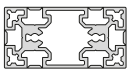 **4G-40x80** W_x= 9,3 cm³ W_y= 19,6 cm³	 **W 40-30** W_x= 3,7 cm³ W_y= 4,2 cm³	 **W 40-45** W_x= 3,4 cm³ W_y= 4,2 cm³	 **W 40-60** W_x= 4,2 cm³ W_y= 4,6 cm³	 **W 40-90** W_x= 7,4 cm³ W_y= 7,4 cm³			
Size 50	 **F-G 50x50** W_x= 8,6 cm³ W_y= 8,9 cm³	 **F-GG 50x50** W_x= 8,4 cm³ W_y= 8,7cm³	 **F-2G 50x50** W_x= 8,3 cm³ W_y= 8,7 cm³	 **F-3G 50x50** W_x= 9,0 cm³ W_y= 9,1 cm³	 **SP-50x50** W_x= 8,2 cm³ W_y= 8,3 cm³				
Size 60	 **F-G 60x60** W_x= 12,6 cm³ W_y= 12,7 cm³	 **F-GG 60x60** W_x= 12,5 cm³ W_y= 12,8 cm³	 **F-2G 60x60** W_x= 12,1 cm³ W_y= 13,0 cm³	 **F-3G 60x60** W_x= 11,9 cm³ W_y= 13,7 cm³					
Size 80	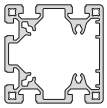 **F-G 80x80** W_x= 34,8 cm³ W_y= 33,0 cm³	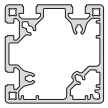 **F-GG 80x80** W_x= 34,1 cm³ W_y= 34,1 cm³	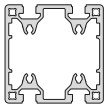 **F-2G 80x80** W_x= 33,3 cm³ W_y= 35,0 cm³	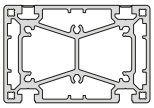 **F-3G 80x120A** W_x= 52,8 cm³ W_y= 77,9 cm³					

Frame profiles

Size 30	 **KL-30x30-3** W_x= 1,5 cm³ W_y= 1,8 cm³	 **KLD 30x40** W_x= 2,7 cm³ W_y= 2,5 cm³	 **KLE-30x30** W_x= 2,0 cm³ W_y= 2,0 cm³	 **KLW 30x15** W_x= 1,4 cm³ W_y= 1,9 cm³	 **KLW 30x30** W_x= 3,1 cm³ W_y= 4,4 cm³	 **KLW 30x45** W_x= 1,2 cm³ W_y= 1,8 cm³	 **KLW 30x60** W_x= 1,7 cm³ W_y= 1,5 cm³	 **KLW 30x90** W_x= 2,7 cm³ W_y= 4,1 cm³
	 **ESP 30** W_x= 1,4 cm³ W_y= 1,8 cm³	 **ESP 30/2** W_x= 1,5 cm³ W_y= 1,8 cm³				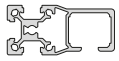 **STP 30** W_x= 6,1 cm³ W_y= 3,7 cm³		
Size 40	 **KL-40x40-3** W_x= 3,5 cm³ W_y= 4,1 cm³	 **KLD-40x40** W_x= 4,1 cm³ W_y= 5,5 cm³	 **KLE-40x40** W_x= 4,6 cm³ W_y= 4,6 cm³	 **KLW 40x15** W_x= 1,1 cm³ W_y= 1,7 cm³	 **KLW 40x45** W_x= 2,4 cm³ W_y= 2,4 cm³	 **KLW 40x60** W_x= 3,8 cm³ W_y= 3,3 cm³	 **KLW 40x90** W_x= 5,8 cm³ W_y= 5,8 cm³	
	 **ESP 40** W_x= 2,7 cm³ W_y= 3,5 cm³	 **ESP 40/2** W_x= 3,0 cm³ W_y= 3,6 cm³				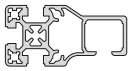 **STP 40** W_x= 9,7 cm³ W_y= 6,1 cm³		

Special Profiles

Size 15	 **15x40** W_x= 1,3 cm³ W_y= 3,3 cm³	 **15x60** W_x= 1,9 cm³ W_y= 7,0 cm³	 **15x80** W_x= 2,5 cm³ W_y= 11,9 cm³		 **15x120** W_x= 3,6 cm³ W_y= 25,8 cm³		 **15x160** W_x= 4,8 cm³ W_y= 44,9 cm³	
Size 20	 **F-20x20** W_x= 0,8 cm³ W_y= 0,8 cm³	 **F-20x40** W_x= 1,3 cm³ W_y= 2,7 cm³	 **F-R 20** W_x= 0,6 cm³ W_y= 0,5 cm³	 **F-G 20x20** W_x= 0,8 cm³ W_y= 0,7 cm³	 **F-GG 20x20** W_x= 0,7 cm³ W_y= 0,7 cm³	 **KL 20x20** W_x= 0,8 cm³ W_y= 0,8 cm³	 **KLD 20x20** W_x= 0,7 cm³ W_y= 0,8 cm³	 **KLE 20x20** W_x= 0,6 cm³ W_y= 0,7 cm³
Size 40	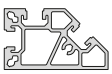 **2x40** W_x= 7,9cm³ W_y= 11,3 cm³	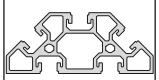 **3x40** W_x= 8,8 cm³ W_y= 14,1 cm³	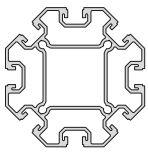 **8x40** W_x= 27,6 cm³ W_y= 27,6 cm³					

Heavy duty with highest stability

If machine structures are required to be extremely stable, they are made from steel …!

This piece of construction wisdom is now well out of date.

The BLOCAN® aluminium heavy duty profiles with a slot width of 18 mm combine with the press mount connector (patent pending) to offer many advantages in the classic field of mechanical engineering. The effective connecting technology without the need for machining, in addition to the high stability and low weight of the profiles increase the adaptability of the structure and reduce the total costs.

The demands of design engineers for flexible and light systems can no longer be fulfilled using steel as a material. Use of aluminium outside of its established stronghold in the automotive industry is increasing. The mechanical engineering industry also benefits from the innovative aluminium profile technology. In the past, the limitations of aluminium were always demonstrated when the stability of the overall structure had to fulfil particularly high requirements. With the new BLOCAN® heavy duty profiles, this is no longer a problem. The 320x160 profile is almost on a par with an IPE 360 double T-girder, even though it has smaller dimensions and weighs 35% less.

The aluminium profiles in the dimensions 80x80, 80x160, 80x240, 160x160, 160x240 and 160x320 mm offer a very high bending and torsional stiffness despite their low net weight. Therefore, even large portal systems and machine frames, which until now were the preserve of steel structures, can be realised in a lightweight design made from aluminium profiles.

Heavy duty profiles			
Size 80	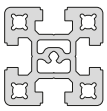 **D-80x80** W_x= 49,6 cm^3 W_y= 49,8 cm^3	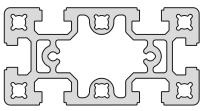 **D-80x160** W_x= 91,6 cm^3 W_y= 174,6 cm^3	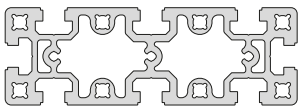 **D-80x240** W_x= 135,2 cm^3 W_y= 355,7 cm^3
Size 160	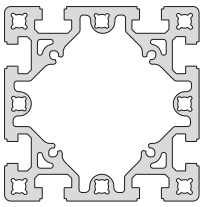 **D-160x160** W_x= 311,7 cm^3 W_y= 311,7 cm^3	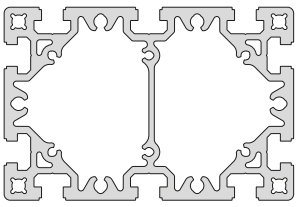 **D-160x240** W_x= 450,2 cm^3 W_y= 611,1 cm^3	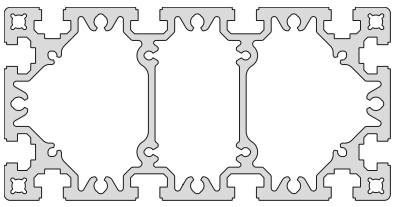 **D-160x320** W_x= 582,0 cm^3 W_y= 976,1 cm^3

Bent BLOCAN® profiles

Bent aluminium extruded profiles allow for smaller and lighter structures. Not only that, they are being used more and more in mechanical engineering for functional and visual reasons. However, these applications call for high-precision radii and radius distributions while avoiding cross-sectional deformation. Thanks to the CNC-controlled bending process, the profile geometry remains intact, thus allowing slot stones to be used. However, for face-to-face fixing, a straight section of 20 mm must be allowed for the fixing screws. Anodised profiles are used as standard. However, small cracks may appear in the anodised layer of the curved sections. For this reason, we recommend anodising after bending if the aesthetic requirements are high and the radii are extremely small.

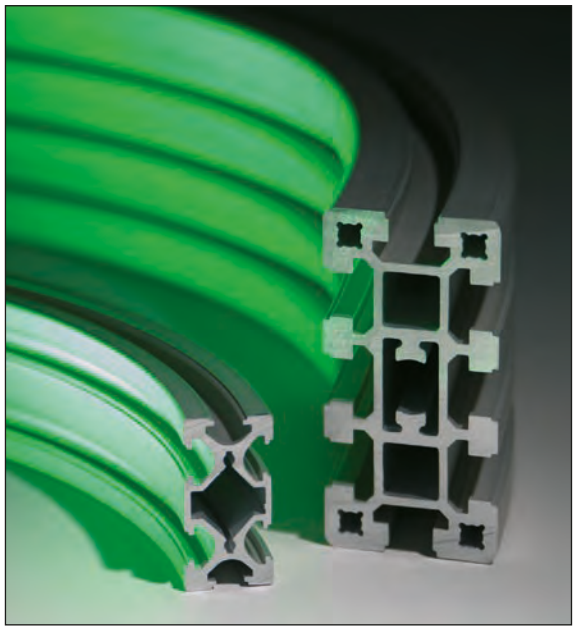

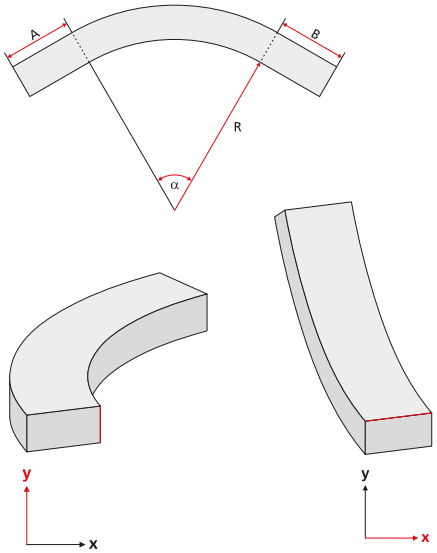

Profile	Bending axis	R_{min}
F-20x20	X | Y	250
F-20x40	X	250
F-20x40	Y	250
F-R 20x20	X | Y	250
F-G 20x20	X | Y	250
KL 20x20	X | Y	250
30x30	X | Y	250
ESP 30x30	X | Y	250
F-R 30x30	X | Y	250
KL 30x30	X | Y	250
40x40	X | Y	250
40x80	X	500
40x80	Y	500
ESP 40x40	X | Y	250
KL 40x40	X | Y	250
F-80x80-L	X | Y	500

Further profiles available on request

Parameters required to make an enquiry/place an order:

- Profile types
- Bending axis
- Dimension A
- Dimension B
- Radius R
- Angle

Safety with visual appeal

Due to the ever increasing automation of manufacturing processes and equipment, the protection of people from sources of danger is growing in importance.
The BLOCAN® safety guard has a grid design and therefore reduces the effort required from the user in planning, construction and assembly to a minimum.
The RK protection system complies with the new Machinery Directive 2006/42/EC. Using special Click & Safe connection elements, the safety guard elements are fixed quickly and securely to pillars made from BLOCAN® aluminium profiles which fulfil the legal requirements for safety devices.

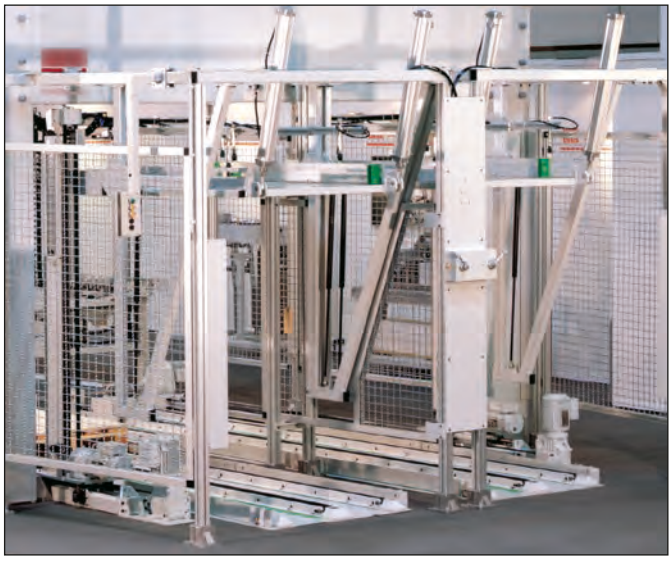



Overview of elements

Pillars	Screen A	Screen B	Screen C	Click & Safe
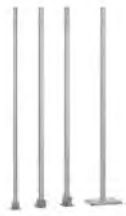				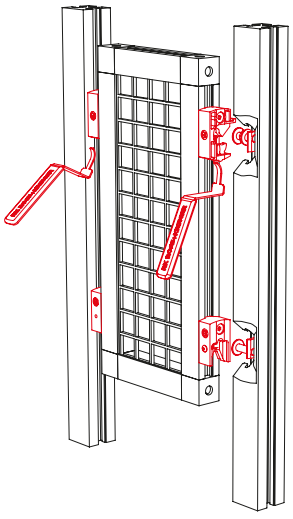 ...the quick and easy safety guard
Hinged door	**Double-wing hinged door**	**Sliding door**	**Lifting door**	
				

RK Easywork workstation system

For configurable workstation systems developed to meet ergonomic and task-specific requirements.

With the RK Easywork selection tool, a complete assembly work table can be configured online to meet ergonomic and task-specific requirements. Step by step, the selection tool guides you through all of the options on the way to creating your ideal workstation. Additional lighting, holders for grab containers, foot rests, standing chairs and ESD accessories are all available, along with other useful devices.
The RK Easywork workstation system is based on RK Rose+Krieger's complete modular system. BLOCAN® Structural profiles made from aluminium and the electrically driven lifting columns offer a perfect combination for the creation of high-quality table concepts. Customers can choose between the simplest static tables or electrically height-adjustable work tables and configure their own combinations.

Step 1:	Step 2:	Step 3:	Step 4:
Calculate the dimensions	Select workstation online	We prepare a detailed quotation	We deliver a fully equipped workstation
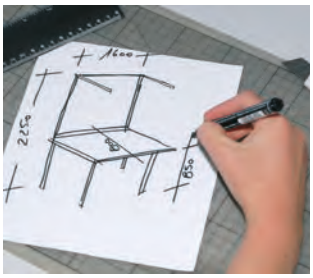			

The basic types			
	 Static	 Electrically height adjustable	Online selection guide

Stable versatile structures





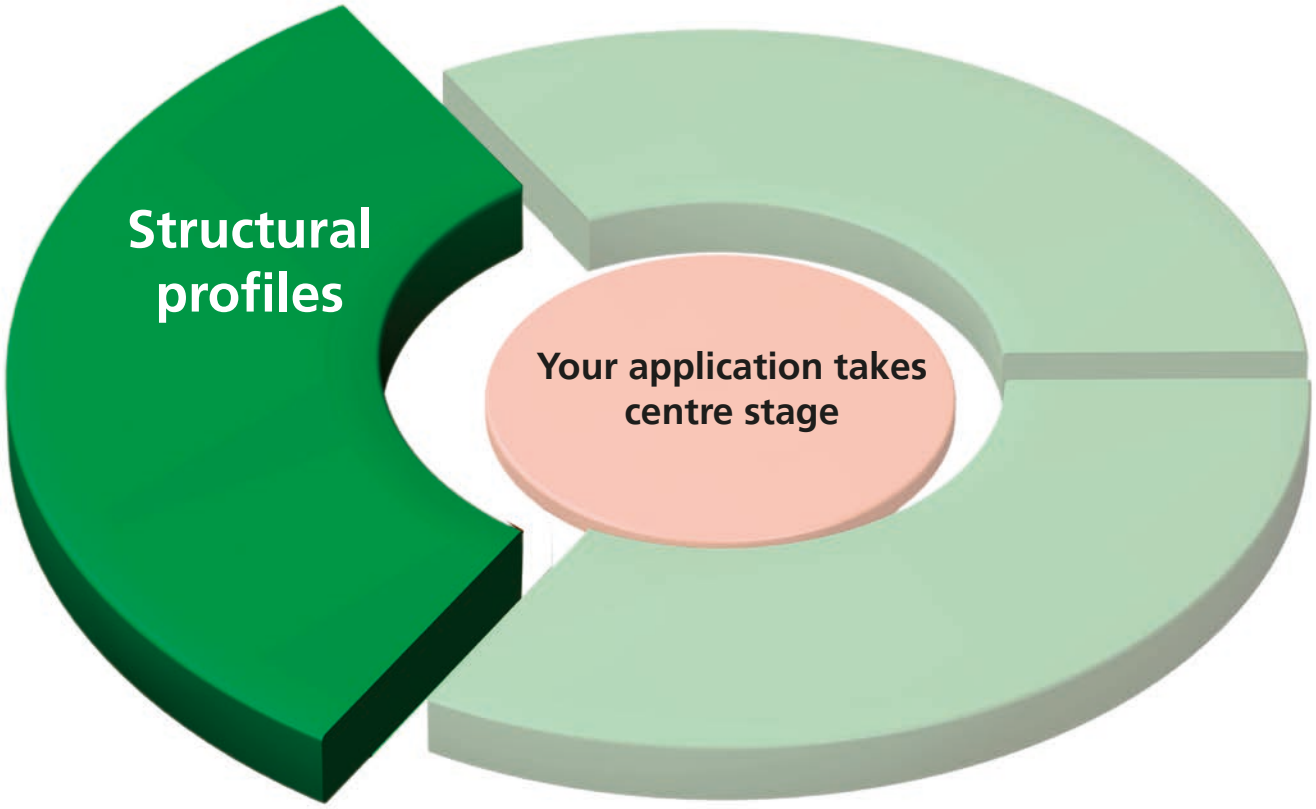

Features:

- Fixing slots on all sides
- Unlimited application options
- Minimal effort required in construction
- Cost optimisation



Stable, versatile structures

Profile overview ..... p. 24

Profiles ..... p. 28

Connection techniques ..... p. 47

Slot stones / screws and accessories ..... p. 85

Profile covers ..... p. 97

Panels and accessories ..... p. 105

Feet / castors and accessories ... p. 124

Fittings ..... p. 140

Conveying elements ..... p. 160

Pneumatics ..... p. 165

Cable channel system ..... p. 166

Structural profile overview

Sizes

30

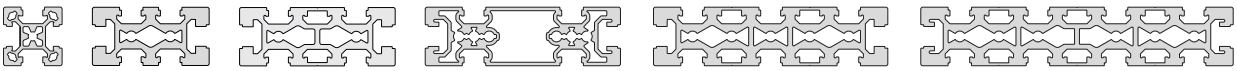

F-30x30 p. 28 · **F-30x60** p. 28 · **F-30x80** p. 29 · **F-30x100** p. 29 · **F-30x120** p. 30 · **F-30x160** p. 30

40

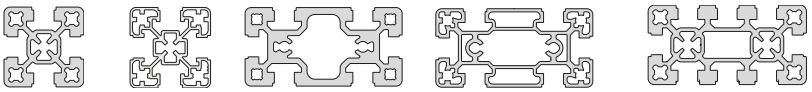

F-40x40 p. 32 · **F-40x40-L** p. 32 · **F-40x80** p. 33 · **F-40x80-L** p. 33 · **F-40x80/3** p. 34

40

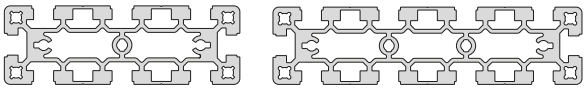

F-40x120 p. 34 · **F-40x160** p. 35

50



F-50x50 p. 36 · **F-50x50-L** p. 36 · **F-50x100** p. 37 · **F-50x200** p. 37

60



F-60x60 p. 38 · **F-60x60/1** p. 38 · **F-60x60-L** p. 39 · **F-60x120** p. 39

80

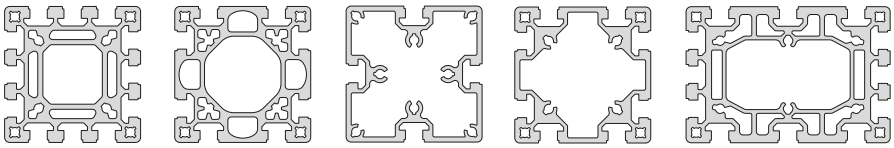

F-80x80 p. 40 · **F-80x80/2** p. 40 · **F-80x80-L** p. 41 · **F-80x80/2-L** p. 41 · **F-80x120** p. 42

80

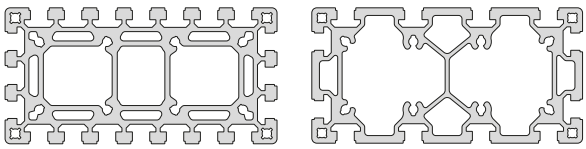

F-80x160 p. 43 · **F-80x160-L** p. 43

100/120

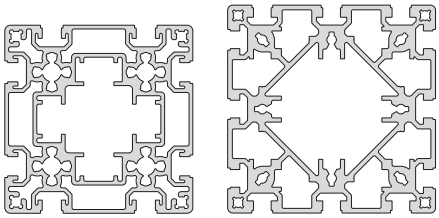

F-100x100 p. 44 · **F-120x120** p. 45

Table of contents

Profiles

Overview ..... p. 24
Slot geometry ..... p. 26
Load data ..... p. 27
Size 30–120 ..... p. 28

Connection techniques

Right-angle connections ..... p. 54
Cross connections ..... p. 66
Angle connections ..... p. 70
Face-to-face and parallel connections ..... p. 78

Accessories

Slot stones, screws ..... p. 84
Profile covers ..... p. 96
Panels ..... p. 104
Feet, castors ..... p. 124
Fittings ..... p. 140
Conveying elements ..... p. 160
Pneumatics ..... p. 164
Cable channel system ..... p. 166

Applications

Frames and structures p.172

Technical data Structural profiles

Slot geometry

- 30 slot geometry
- For all profiles up to size 30
- Exception: F-30x60, F-30x80, F-30x100, F-30x120, F-30x160
- with 40 slot geometry on the long side

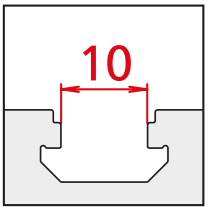

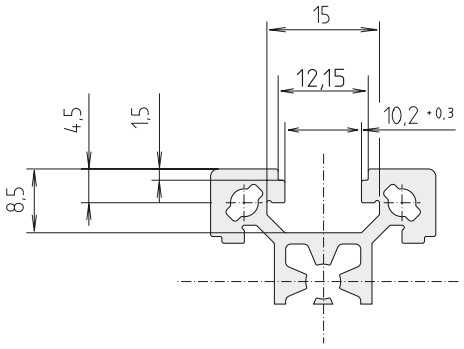

- 40 slot geometry
- Geometry for all profiles as of size 40

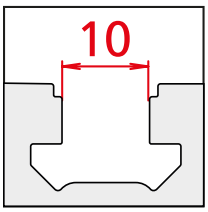

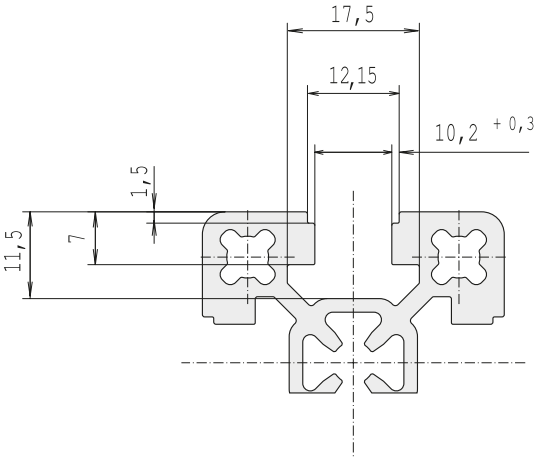

Load data

Moment of inertia: I [cm⁴]

Moment of resistance: w [cm³]

Profiles	Area	I_x [cm⁴]	I_y [cm⁴]	I_t [cm⁴]	W_x [cm³]	W_y [cm³]	Weight	Page
F-30x30	363	3,3	3,3	0,5	2,2	2,2	979	28
F-30x60	874	7,9	29,6	2,5	5,3	9,9	2350	28
F-30x80	1151	10,6	67,4	7,0	7,0	16,9	3100	29
F-30x100	1023	9,8	101,0	7,9	6,5	20,0	2762	29
F-30x120	1174	15,3	219,6	14,0	10,2	36,6	4780	30
F-30x160	2309	20,0	513,0	21,5	13,3	64,1	6230	30
F-40x40	705	11,2	11,2	1,7	5,58	5,58	1903	32
F-40x40-L	475	7,1	7,1	1,0	3,6	3,6	1281	32
F-40x80	1332	22,7	88,9	13,2	11,3	22,2	3397	33
F-40x80-L	933	14,9	62,8	8,4	7,4	15,7	2518	33
F-40x80/3	1274	20,0	79,0	5,4	10,0	19,8	3440	34
F-40x120	1738	29,8	253,8	20,7	14,7	42,2	4694	34
F-40x160	2350	39,8	579,6	30,8	19,9	72,4	6344	35
F-50x50	1227	29,1	29,1	9,0	11,6	11,6	3314	36
F-50x50-L	866	22,5	22,5	6,1	9,0	9,0	2339	36
F-50x100	1743	43,9	180,8	32,9	17,6	36,1	4707	37
F-50x200	3024	80,3	1223,6	98,9	32,1	122,4	8165	37
F-60x60	1504	51,2	51,2	14,9	17,1	17,1	4065	38
F-60x60/1	1542	54,6	54,6	23,9	18,1	18,1	4161	38
F-60x60-L	1095	42,2	42,2	18,0	14,1	14,1	2960	39
F-60x120	2777	94,7	372,3	57,9	62,0	31,5	7500	39
F-80x80	2480	155,3	155,3	64,5	38,8	38,8	6696	40
F-80x80/2	2218	153,8	153,8	82,4	38,4	38,4	5990	40
F-80x80-L	1498	115,1	115,1	72,7	28,8	28,8	4045	41
F-80x80/2-L	1862	144,5	144,5	65,5	36,1	36,1	5027	41
F-80x120	3267	242,5	500,7	177,5	60,6	83,5	8822	42
F-80x160	4723	314,6	1126,9	254,5	77,4	140,9	12753	43
F-80x160-L	3714	291,3	1024,6	250,4	72,8	128,1	10028	43
F-100x100	2890	304,1	304,1	156,9	60,8	60,8	7804	44
F-120x120	4259	665,1	665,1	349,3	110,8	110,8	11500	45

Profiles / size 30

Order instruction: flange bracket

- Purchase only in lot sizes and a multiple of that see product table below

F-30x30



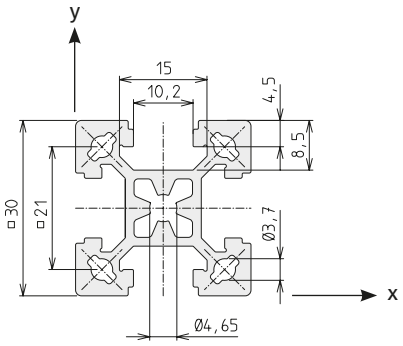

Code No. F-30x30 profile			Anodised
4575000	Cut to size	max. 6000 mm	Clear
4575001	Bar	6000 mm	Clear

Connection		Connection to slot geometry	lot sizes	Code No.
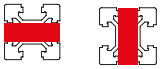	long. + transverse	30	10, 20, 30... pcs	4306709
		40	10, 20, 30... pcs	4306710

For description of slot geometry, please see page 26

Area	363	mm²
I_x	3.3	cm⁴
I_y	3.3	cm⁴
I_t	0.5	cm⁴
W_x	2.2	cm³
W_y	2.2	cm³
Weight	979	g/m

F-30x60



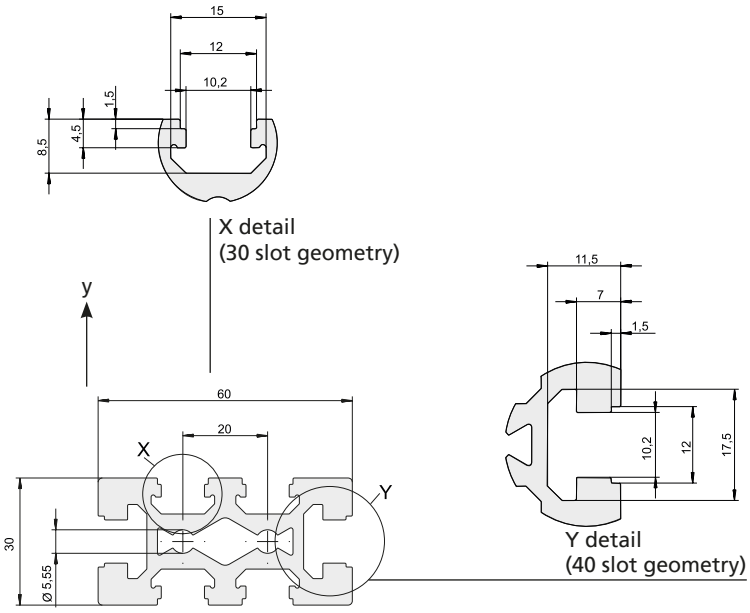

Code No. F-30x60 profile			Anodised
4305000	Cut to size	max. 6000 mm	Clear
4305001	Bar	6000 mm	Clear

Connection		Connection to slot geometry	lot sizes	Code No.
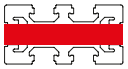	long.	30	10, 20, 30... pcs	**4226706**
		40	10, 20, 30... pcs	**4226702**
	transverse	30	10, 20, 30... pcs	**4176704**
		40	10, 20, 30... pcs	**4176705**

For description of slot geometry, please see page 26

Area	874	mm²
I_x	7.9	cm⁴
I_y	29.6	cm⁴
I_t	2.5	cm⁴
W_x	5.3	cm³
W_y	9.9	cm³
Weight	2350	g/m

F-30x80



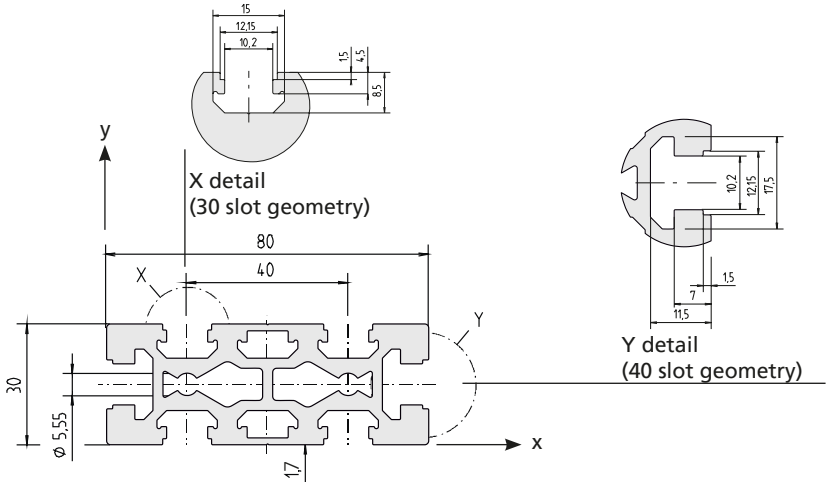

Code No. F-30x80 profile			Anodised
4315000	Cut to size	max. 6000 mm	Clear
4315001	Bar	6000 mm	Clear

Area	1151	mm²
I_x	10.6	cm⁴
I_y	67.4	cm⁴
I_t	7.0	cm⁴
W_x	7.0	cm³
W_y	16.9	cm³
Weight	3100	g/m

Connection		Connection to slot geometry	lot sizes	Code No.
	long.	30	10, 20, 30... pcs	4316706
		40	10, 20, 30... pcs	4246702
	transverse	30	10, 20, 30... pcs	4176704
		40	10, 20, 30... pcs	4176705

For description of slot geometry, please see page 26

F-30x100

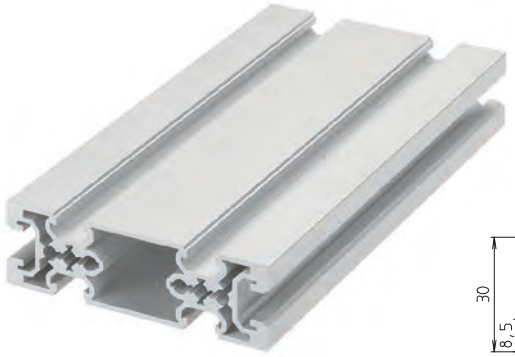

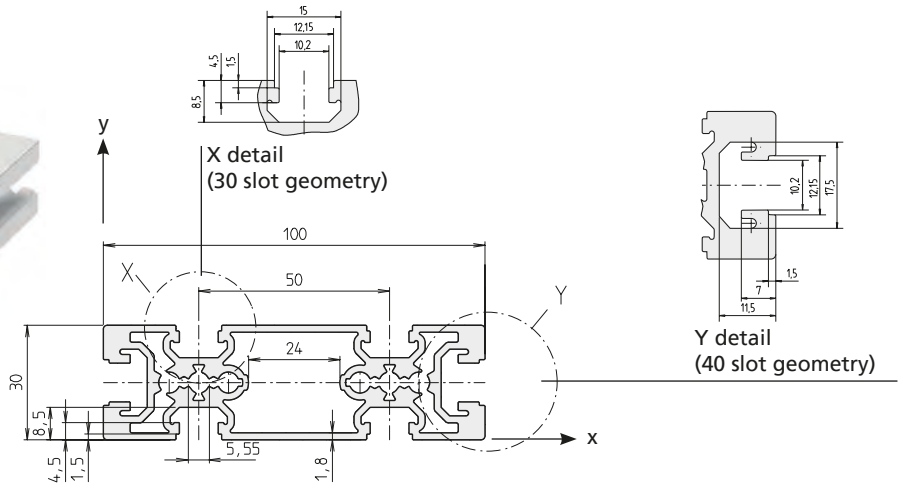

Code No. F-30x100 profile			Anodised
4295000	Cut to size	max. 6000 mm	Clear
4295001	Bar	6000 mm	Clear

Area	1023	mm²
I_x	9.8	cm⁴
I_y	101.0	cm⁴
I_t	7.9	cm⁴
W_x	6.5	cm³
W_y	20.0	cm³
Weight	2762	g/m

Connection		Connection to slot geometry	lot sizes	Code No.
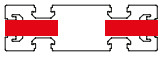	long.	30	10, 20, 30... pcs	**4086706**
		40	10, 20, 30... pcs	**4086702**
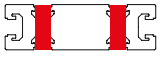	transverse	30	10, 20, 30... pcs	**4176704**
		40	10, 20, 30... pcs	**4176705**

For description of slot geometry, please see page 26

Profiles / size 30

Order instruction: flange bracket

- Purchase only in lot sizes and a multiple of that see product table below

F-30x120



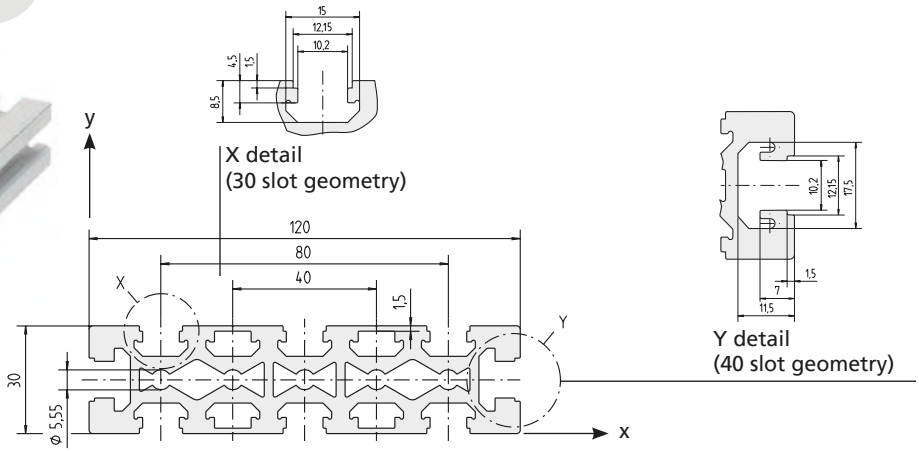

Code No. F-30x120 profile			Anodised
4325000	Cut to size	max. 6000 mm	Clear
4325001	Bar	6000 mm	Clear

Connection		Connection to slot geometry	lot sizes	Code No.
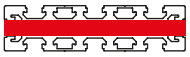	long.	30	–	**4326706**
		40	–	**4326702**
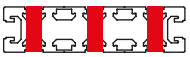	transverse	30	10, 20, 30... pcs	**4176704**
		40	10, 20, 30... pcs	**4176705**

Area	1174	mm^2
I_x	15.3	cm^4
I_y	219.6	cm^4
I_t	14.0	cm^4
W_x	10.0	cm^3
W_y	36.6	cm^3
Weight	4780	g/m

For description of slot geometry, please see page 26

F-30x160



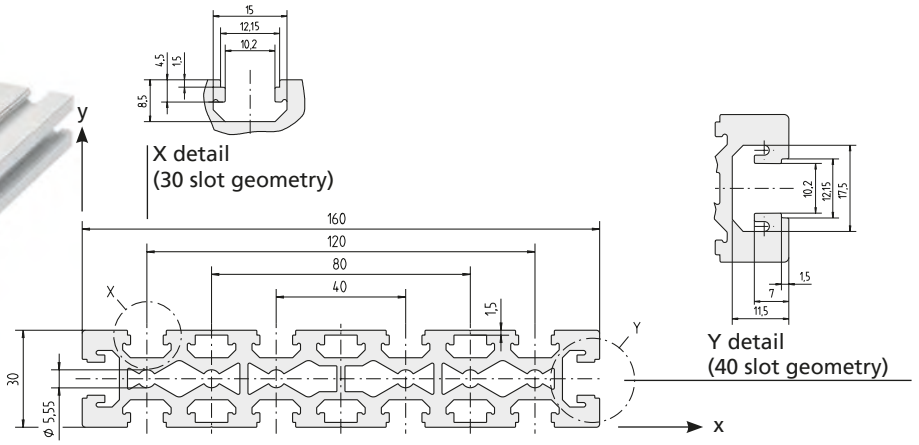

Code No. F-30x160 profile			Anodised
4335000	Cut to size	max. 6000 mm	Clear
4335001	Bar	6000 mm	Clear

Connection		Connection to slot geometry	lot sizes	Code No.
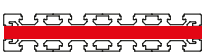	long.	30	–	**4336706**
		40	–	**4336702**
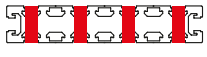	transverse	30	10, 20, 30... pcs	**4176704**
		40	10, 20, 30... pcs	**4176705**

Area	2309	mm^2
I_x	20.0	cm^4
I_y	513.0	cm^4
I_t	21.3	cm^4
W_x	13.3	cm^3
W_y	64.1	cm^3
Weight	6230	g/m

For description of slot geometry, please see page 26



Profiles / size 40

Order instruction: flange bracket

- Purchase only in lot sizes and a multiple of that see product table below

F-40x40



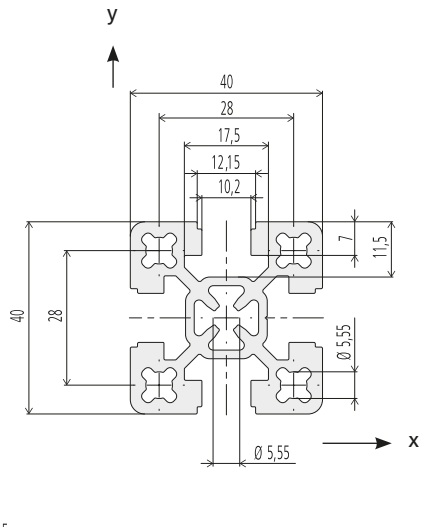

Code No. F-40x40 profile			Anodised
4D35000	Cut to size	max. 6000 mm	Clear
4D35001	Bar	6000 mm	Clear

Area	705	mm²
I_x	11.2	cm⁴
I_y	11.2	cm⁴
I_t	1.7	cm⁴
W_x	5.58	cm³
W_y	5.58	cm³
Weight	1903	g/m

Connection	Connection to slot geometry	lot sizes	Code No.
long. + transverse	30	10, 20, 30... pcs	**4816703**
	40	10, 20, 30... pcs	**4816702**

For description of slot geometry, please see page 26

F-40x40-L



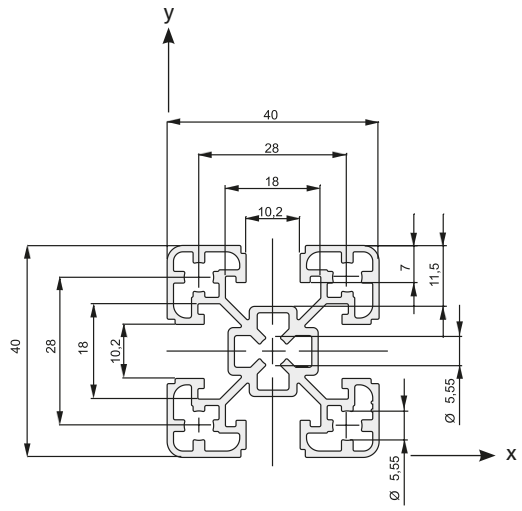

Code No. F-40x40-L profile			Anodised
4815000	Cut to size	max. 6000 mm	Clear
4815001	Bar	6000 mm	Clear
4815010	Cut to size	max. 6000 mm	Black
4815011	Bar	6000 mm	Black

Area	475	mm²
I_x	7.1	cm⁴
I_y	7.1	cm⁴
I_t	1.0	cm⁴
W_x	3.6	cm³
W_y	3.6	cm³
Weight	1281	g/m

Connection	Connection to slot geometry	lot sizes	Code No.
long. + transverse	30	10, 20, 30... pcs	**4816703**
	40	10, 20, 30... pcs	**4816702**

For description of slot geometry, please see page 26

F-40x80

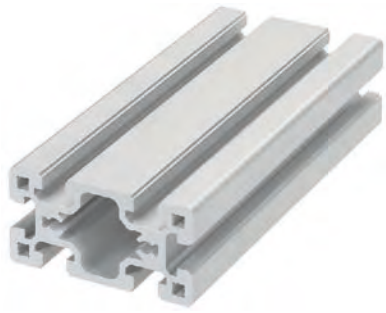

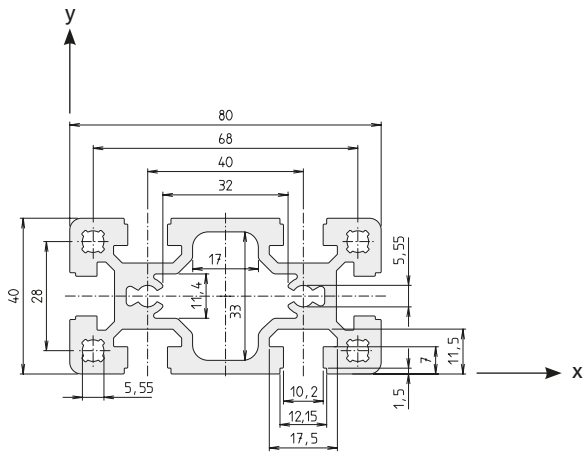

Code No. F-40x80 profile			Anodised
4395000	Cut to size	max. 6000 mm	Clear
4395001	Bar	6000 mm	Clear

Connection		Connection to slot geometry	lot sizes	Code No.
	long.	30	10, 20, 30... pcs	**4316706**
		40	10, 20, 30... pcs	**4246702**
	transverse	30	10, 20, 30... pcs	**4816703**
		40	10, 20, 30... pcs	**4816702**

Area	1332	mm²
I_x	22.7	cm⁴
I_y	88.9	cm⁴
I_t	13.2	cm⁴
W_x	11.3	cm³
W_y	22.3	cm³
Weight	3397	g/m

For description of slot geometry, please see page 26

F-40x80-L



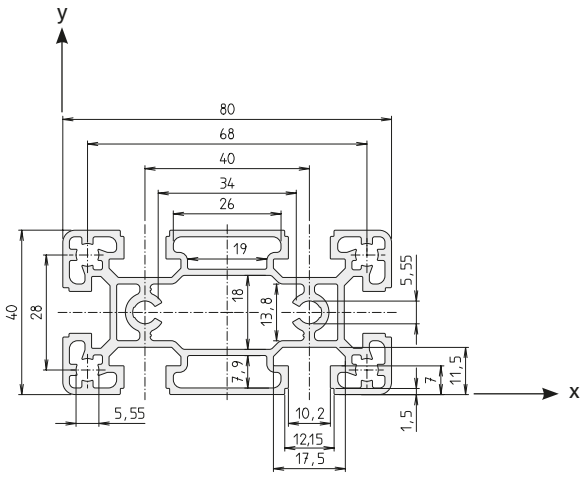

Code No. F-40x80-L profile			Anodised
4285000	Cut to size	max. 6000 mm	Clear
4285001	Bar	6000 mm	Clear

Connection		Connection to slot geometry	lot sizes	Code No.
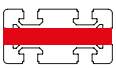	long.	30	10, 20, 30... pcs	**4316706**
		40	10, 20, 30... pcs	**4246702**
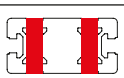	transverse	30	10, 20, 30... pcs	**4816703**
		40	10, 20, 30... pcs	**4816702**

Area	933	mm²
I_x	14.9	cm⁴
I_y	62.8	cm⁴
I_t	8.4	cm⁴
W_x	7.4	cm³
W_y	15.7	cm³
Weight	2518	g/m

For description of slot geometry, please see page 26

Profiles / size 40

Order instruction: flange bracket

- Purchase only in lot sizes and a multiple of that see product table below

F-40x80/3



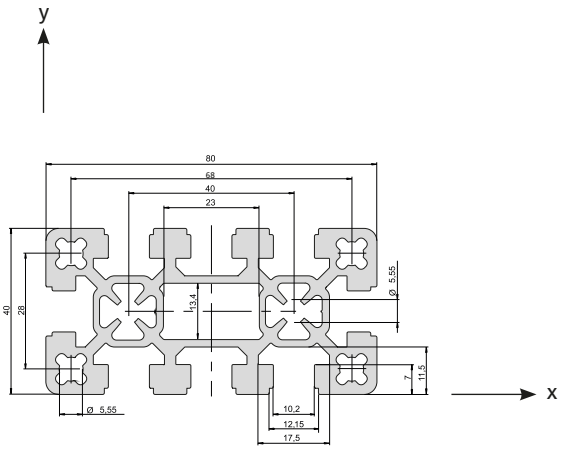

Code No. F-40x80/3 profile			Anodised
4D45000	Cut to size	max. 6000 mm	Clear
4D45001	Bar	6000 mm	Clear

Area	1274	mm²
I_x	20.0	cm⁴
I_y	79.0	cm⁴
I_t	5.4	cm⁴
W_x	10.0	cm³
Wy	19.8	cm³
Weight	3440	g/m

Connection		Connection to slot geometry	lot sizes	Code No.
	long.	30	10, 20, 30... pcs	4316706
		40	10, 20, 30... pcs	4246702
	transverse	30	10, 20, 30... pcs	4816703
		40	10, 20, 30... pcs	4816702

For description of slot geometry, please see page 26

F-40x120



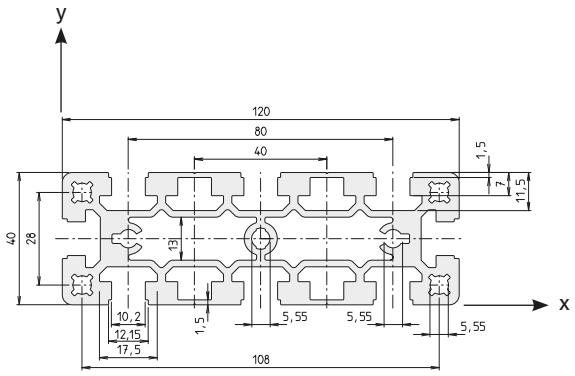

Code No. F-40x120 profile			Anodised
4645000	Cut to size	max. 6000 mm	Clear
4645001	Bar	6000 mm	Clear

Area	1738	mm²
I_x	29.8	cm⁴
I_y	253.7	cm⁴
I_t	20.7	cm⁴
W_x	14.7	cm³
W_y	42.2	cm³
Weight	4694	g/m

Connection		Connection to slot geometry	lot sizes	Code No.
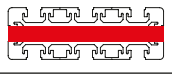	long.	30	–	4326706
		40	–	4326702
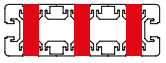	transverse	30	10, 20, 30... pcs	4816703
		40	10, 20, 30... pcs	4816702

For description of slot geometry, please see page 26

F-40x160



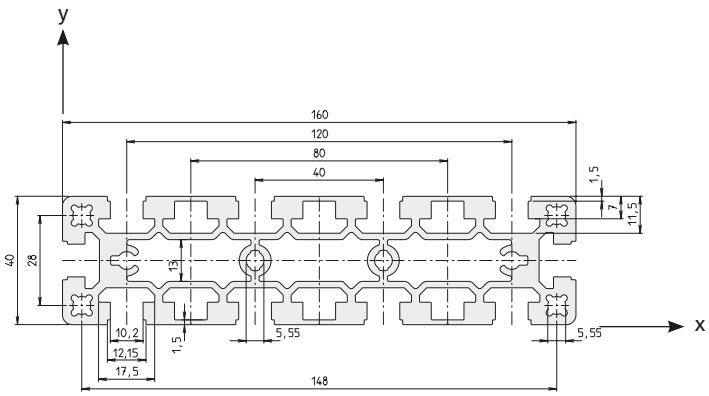

Code No. F-40x160 profile			Anodised
4655000	Cut to size	max. 6000 mm	Clear
4655001	Bar	6000 mm	Clear

Area	2350	mm^2
I_x	39.8	cm^4
I_y	579.6	cm^4
I_t	30.8.	cm^4
W_x	19.9	cm^3
W_y	72.4	cm^3
Weight	6344	g/m

Connection		Connection to slot geometry	lot sizes	Code No.
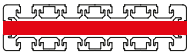	long.	30	–	**4336706**
		40	–	**4336702**
	transverse	30	10, 20, 30... pcs	**4816703**
		40	10, 20, 30... pcs	**4816702**

For description of slot geometry, please see page 26

Profiles / size 50

Order instruction: flange bracket

- Purchase only in lot sizes and a multiple of that see product table below

F-50x50



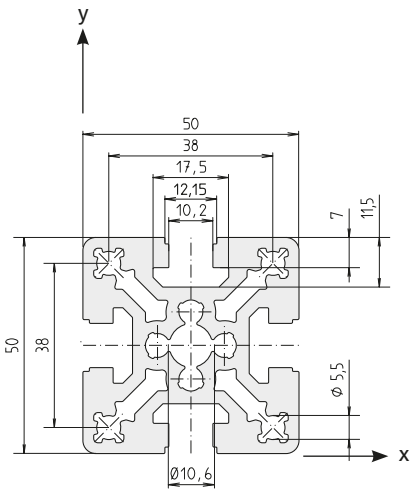

Code No. F-50x50 profile			Anodised
4085000	Cut to size	max. 6000 mm	Clear
4085001	Bar	6000 mm	Clear

Area	1227	mm²
I_x	29.1	cm⁴
I_y	29.1	cm⁴
I_t	9.0	cm⁴
W_x	11.6	cm³
W_y	11.6	cm³
Weight	3314	g/m

Connection	Connection to slot geometry	lot sizes	Code No.
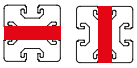 long. + transverse	30	10, 20, 30... pcs	**4086706**
	40	10, 20, 30... pcs	**4086702**

For description of slot geometry, please see page 26

F-50x50-L



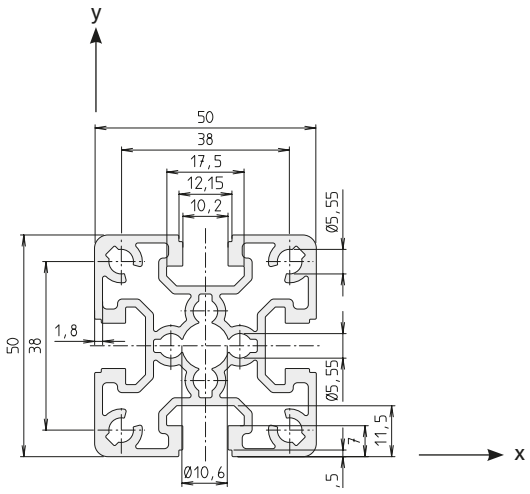

Code No. F-50x50-L profile			Anodised
4275000	Cut to size	max. 6000 mm	Clear
4275001	Bar	6000 mm	Clear

Area	866	mm²
I_x	22.5	cm⁴
I_y	22.5	cm⁴
I_t	6.1	cm⁴
W_x	9.0	cm³
W_y	9.0	cm³
Weight	2339	g/m

Connection	Connection to slot geometry	lot sizes	Code No.
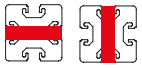 long. + transverse	30	10, 20, 30... pcs	**4086706**
	40	10, 20, 30... pcs	**4086702**

For description of slot geometry, please see page 26

F-50x100

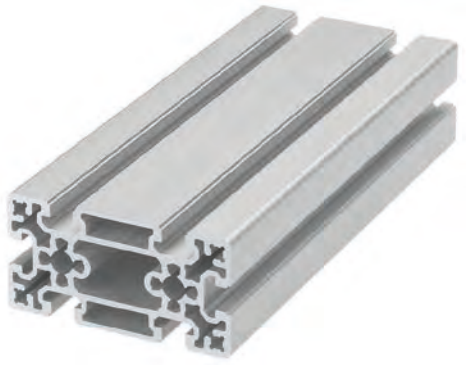

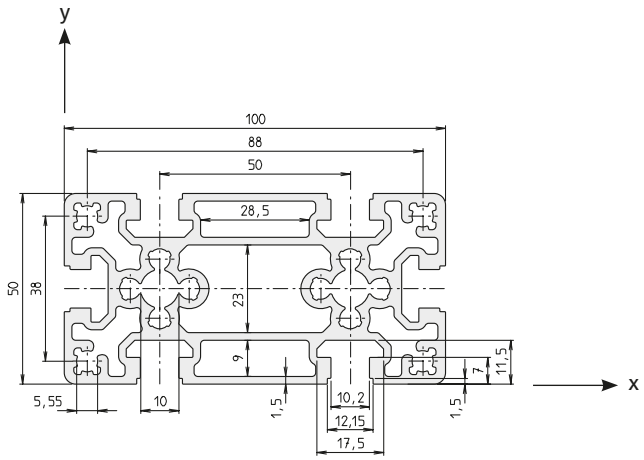

Code No. Profile F-50x100			Anodised
4665000	Cut to size	max. 6000 mm	Clear
4665001	Bar	6000 mm	Clear

Area	1743	mm²
I_x	43.9	cm⁴
I_y	180.8	cm⁴
I_t	32.9	cm⁴
W_x	17.6	cm³
W_y	36.1	cm³
Weight	4707	g/m

Connection	Connection to slot geometry	lot sizes	Code No.
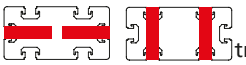 long. + transverse	30	10, 20, 30... pcs	**4086706**
	40	10, 20, 30... pcs	**4086702**

For description of slot geometry, please see page 26

F-50x200



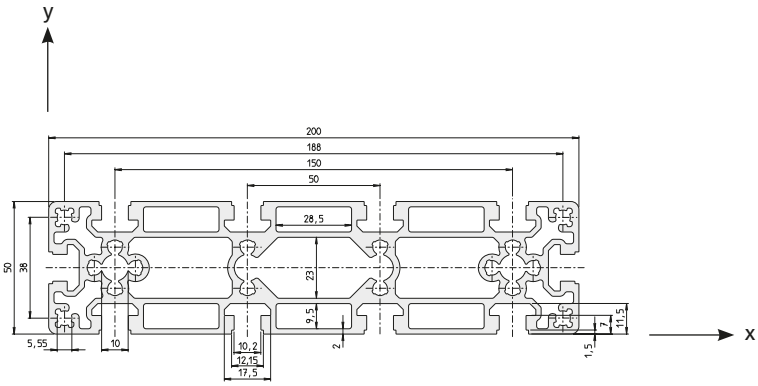

Code No. F-50x200 profile			Anodised
4675000	Cut to size	max. 6000 mm	Clear
4675001	Bar	6000 mm	Clear

Area	3024	mm²
I_x	80.3	cm⁴
I_y	1223.6	cm⁴
I_t	98.9	cm⁴
W_x	32.1	cm³
W_y	122.4	cm³
Weight	8165	g/m

Connection	Connection to slot geometry	lot sizes	Code No.
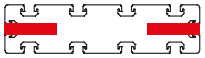 long.	30	10, 20, 30... pcs	**4086706**
	40	10, 20, 30... pcs	**4086702**
 transverse	30	10, 20, 30... pcs	**4086706**
	40	10, 20, 30... pcs	**4086702**

For description of slot geometry, please see page 26

Profiles / size 60

Order instruction: flange bracket

- Purchase only in lot sizes and a multiple of that see product table below

F-60x60



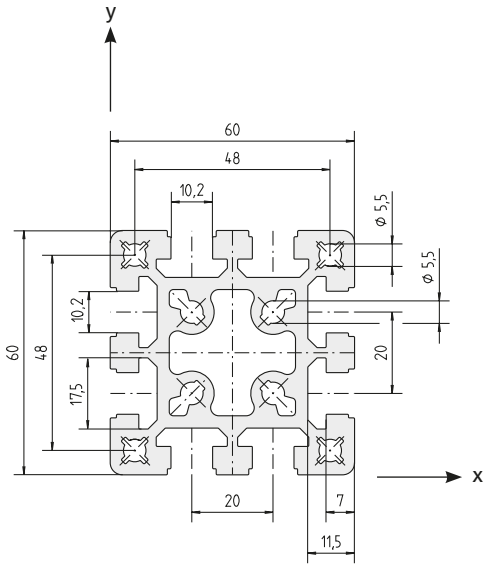

Code No. F-60x60 profile			Anodised
4125000	Cut to size	max. 6000 mm	Clear
4125001	Bar	6000 mm	Clear

Area	1504	mm²
I_x	51.2	cm⁴
I_y	51.2	cm⁴
I_t	14.9	cm⁴
W_x	17.1	cm³
W_y	17.1	cm³
Weight	4065	g/m

Connection	Connection to slot geometry	lot sizes	Code No.
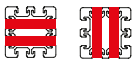 long. + transverse	30	10, 20, 30... pcs	**4226706**
	40	10, 20, 30... pcs	**4226702**

For description of slot geometry, please see page 26

F-60x60/1



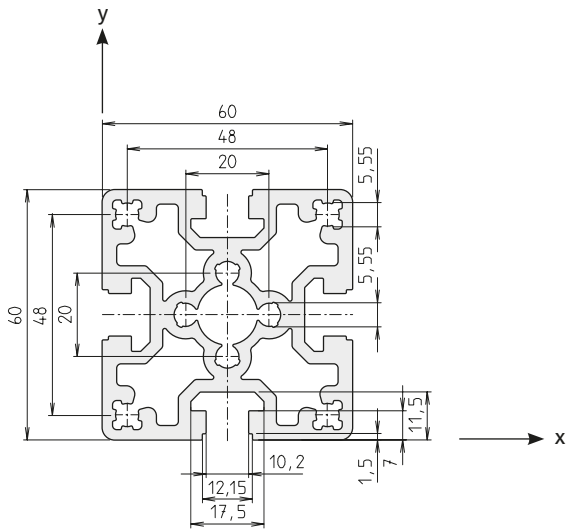

Code No. F-60x60/1 profile			Anodised
4135000	Cut to size	max. 6000 mm	Clear
4135001	Bar	6000 mm	Clear

Area	1542	mm²
I_x	54.6	cm⁴
I_y	54.6	cm⁴
I_t	23.9	cm⁴
W_x	18.1	cm³
W_y	18.1	cm³
Weight	4161	g/m

Connection	Connection to slot geometry	lot sizes	Code No.
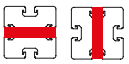 long. + transverse	30	10, 20, 30... pcs	**4226706**
	40	10, 20, 30... pcs	**4226702**

For description of slot geometry, please see page 26

F-60x60-L



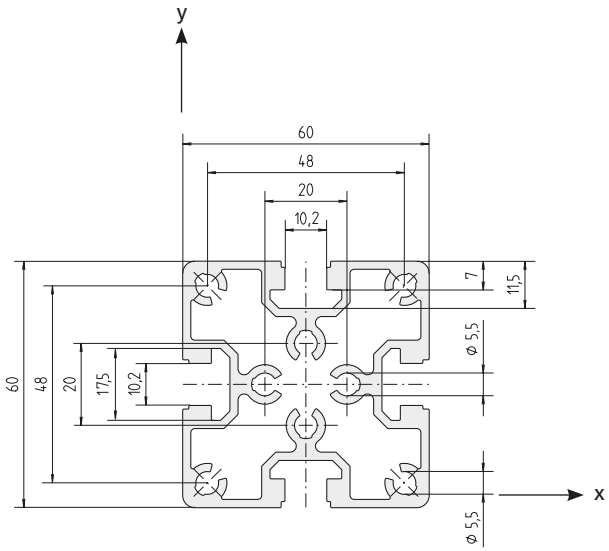

Area	1095	mm²
I_x	42.2	cm⁴
I_y	42.2	cm⁴
I_t	18.0	cm⁴
W_x	14.1	cm³
W_y	14.1	cm³
Weight	2960	g/m

Code No. F-60x60-L profile			Anodised
4225000	Cut to size	max. 6000 mm	Clear
4225001	Bar	6000 mm	Clear

Connection	Connection to slot geometry	lot sizes	Code No.
long. + transverse	30	10, 20, 30... pcs	4226706
	40	10, 20, 30... pcs	4226702

For description of slot geometry, please see page 26

F-60x120



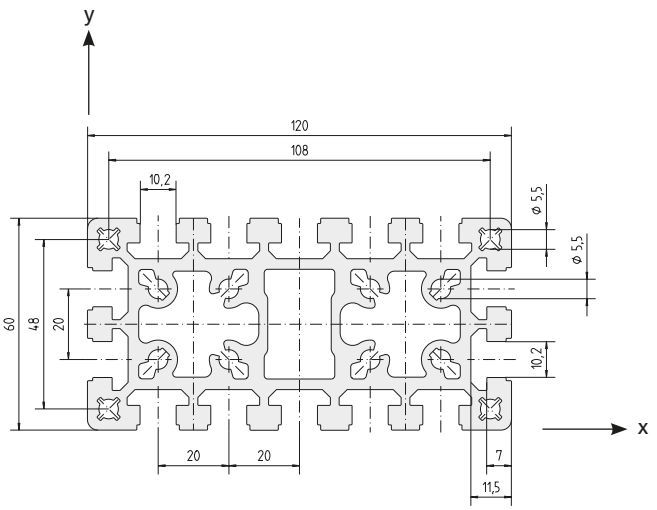

Area	2777	mm²
I_x	94.7	cm⁴
I_y	372.3	cm⁴
I_t	57.5	cm⁴
W_x	31.5	cm³
W_y	62.0	cm³
Weight	7500	g/m

Code No. Profile F-60x120			Anodised
4065000	Cut to size	max. 6000 mm	Clear
4065001	Bar	6000 mm	Clear

Connection	Connection to slot geometry	lot sizes	Code No.
long.	30	–	4326706
	40	–	4326702
transverse	30	10, 20, 30... pcs	4226706
	40	10, 20, 30... pcs	4226702

For description of slot geometry, please see page 26

Profiles / size 80

Order instruction: flange bracket

- Purchase only in lot sizes and a multiple of that see product table below

F-80x80



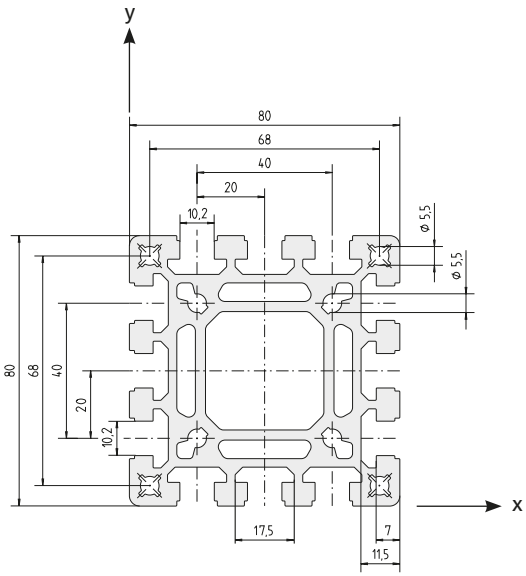

Area	2480	mm²
I_x	155.3	cm⁴
I_y	155.3	cm⁴
I_t	64.5	cm⁴
W_x	38.8	cm³
W_y	38.8	cm³
Weight	6696	g/m

Code No. F-80x80 profile			Anodised
4145000	Cut to size	max. 6000 mm	Clear
4145001	Bar	6000 mm	Clear
4145010	Cut to size	max. 6000 mm	Black
4145011	Bar	6000 mm	Black

Connection	Connection to slot geometry	lot sizes	Code No.
long. + transverse	30	10, 20, 30... pcs	4316706
	40	10, 20, 30... pcs	4246702

For description of slot geometry, please see page 26

F-80x80/2



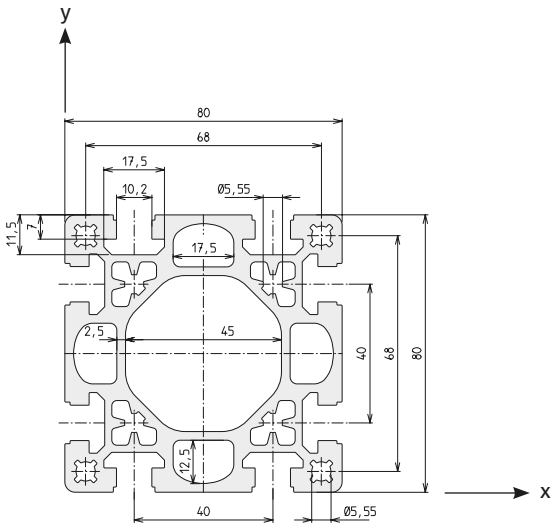

Area	2218	mm²
I_x	153.8	cm⁴
I_y	153.8	cm⁴
I_t	82.4	cm⁴
W_x	38.4	cm³
W_y	38.4	cm³
Weight	5990	g/m

Code No. F-80x80/2 profile			Anodised
4805000	Cut to size	max. 6000 mm	Clear
4805001	Bar	6000 mm	Clear

Connection	Connection to slot geometry	lot sizes	Code No.
long. + transverse	30	10, 20, 30... pcs	4316706
	40	10, 20, 30... pcs	4246702

For description of slot geometry, please see page 26

F-80x80-L



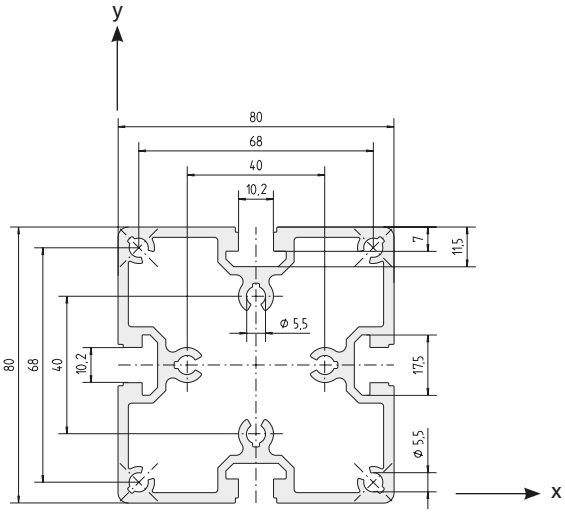

Area	1498	mm²
I_x	115.1	cm⁴
I_y	115.1	cm⁴
I_t	72.7	cm⁴
W_x	28.8	cm³
W_y	28.8	cm³
Weight	4045	g/m

Code No. F-80x80-L profile			Anodised
4245000	Cut to size	max. 6000 mm	Clear
4245001	Bar	6000 mm	Clear

Connection		Connection to slot geometry	lot sizes	Code No.
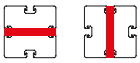	long. + transverse	30	10, 20, 30... pcs	**4316706**
		40	10, 20, 30... pcs	**4246702**

For description of slot geometry, please see page 26

F-80x80/2-L



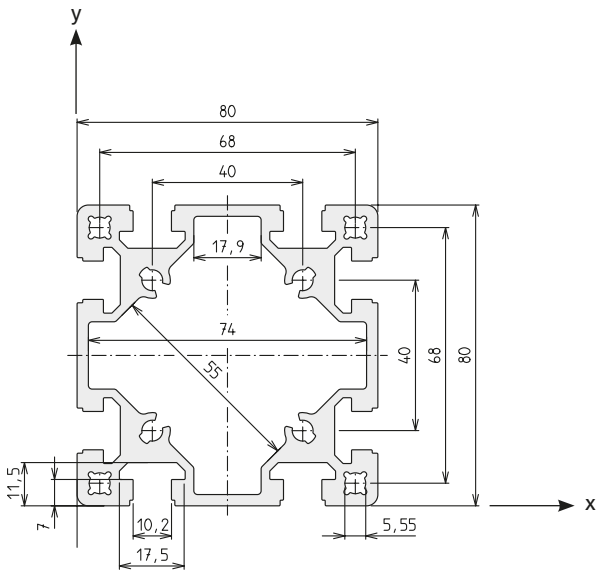

Area	1862	mm²
I_x	144.5	cm⁴
I_y	144.5	cm⁴
I_t	65.5	cm⁴
W_x	36.1	cm³
W_y	36.1	cm³
Weight	5027	g/m

Code No. F-80x80/2-L profile			Anodised
4885000	Cut to size	max. 6000 mm	Clear
4885001	Bar	6000 mm	Clear

Connection		Connection to slot geometry	lot sizes	Code No.
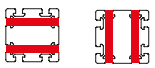	long. + transverse	30	10, 20, 30... pcs	**4316706**
		40	10, 20, 30... pcs	**4246702**

For description of slot geometry, please see page 26

Profiles / size 80

Order instruction: flange bracket

- Purchase only in lot sizes and a multiple of that see product table below

F-80x120

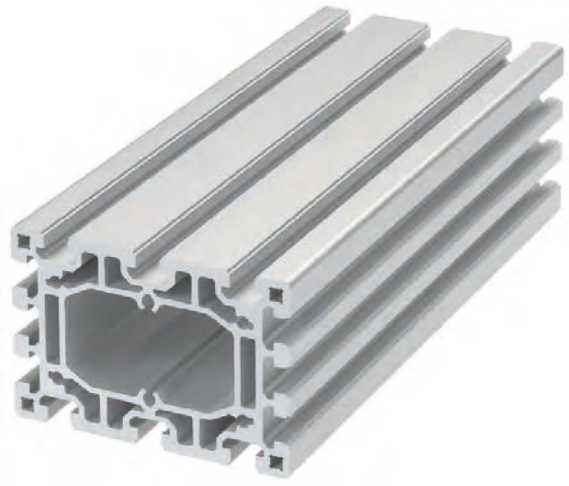

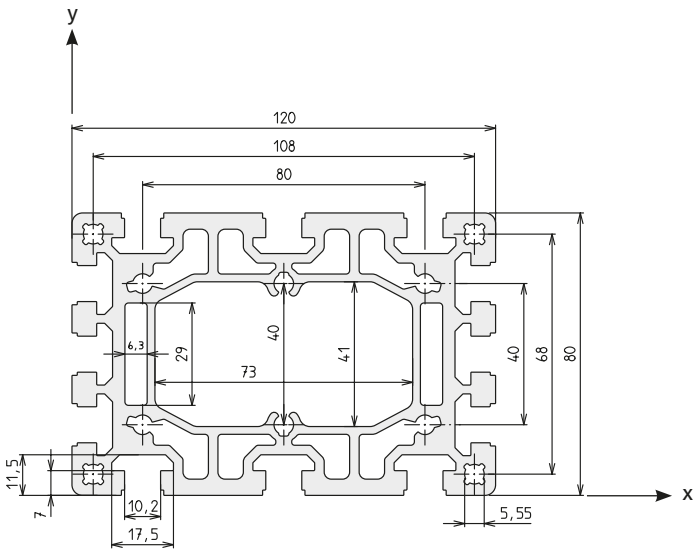

Area	3267	mm²
I_x	242.5	cm⁴
I_y	500.7	cm⁴
I_t	177.5	cm⁴
W_x	60.6	cm³
W_y	83.5	cm³
Weight	8822	g/m

Code No. F-80x120 profile			Anodised
4685000	Cut to size	max. 6000 mm	Clear
4685001	Bar	6000 mm	Clear

Connection		Connection to slot geometry	lot sizes	Code No.
	long.	30	–	**4326706**
		40	–	**4326702**
	transverse	30	10, 20, 30... pcs	**4316706**
		40	10, 20, 30... pcs	**4246702**

For description of slot geometry, please see page 26

F-80x160

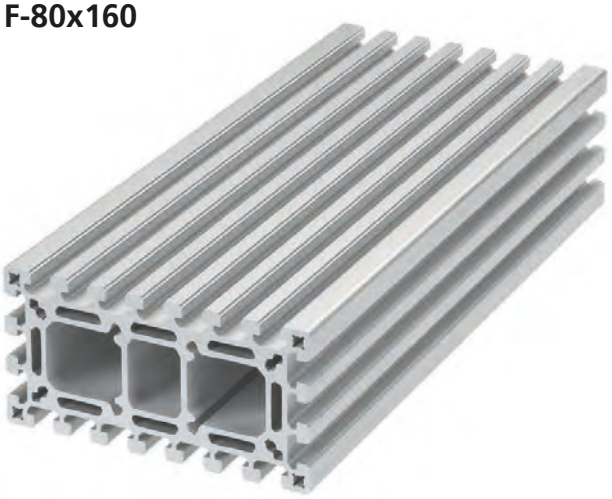

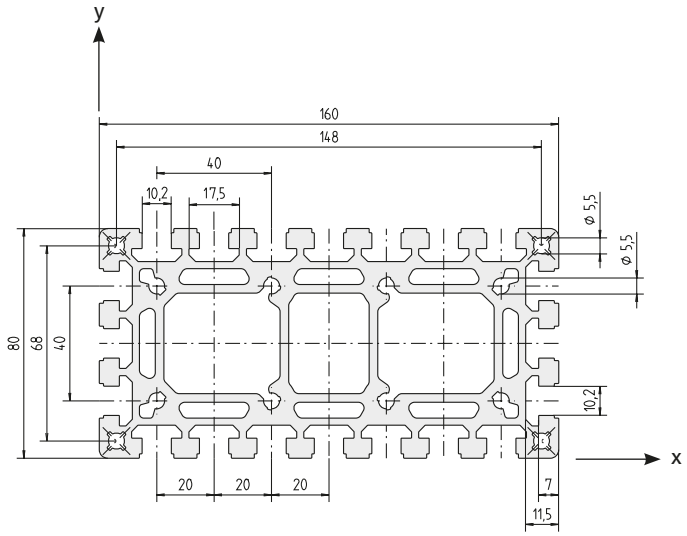

Code No. Profile F-80x160			Anodised
4075000	Cut to size	max. 6000 mm	Clear
4075001	Bar	6000 mm	Clear

Area	4723	mm²
I_x	314.6	cm⁴
I_y	1126.9	cm⁴
I_t	254.5	cm⁴
W_x	77.4	cm³
W_y	140.9	cm³
Weight	12753	g/m

Connection		Connection to slot geometry	lot sizes	Code No.
	long.	30	–	4336706
		40	–	4336702
	transverse	30	10, 20, 30... pcs	4316706
		40	10, 20, 30... pcs	4246702

For description of slot geometry, please see page 26

F-80x160-L



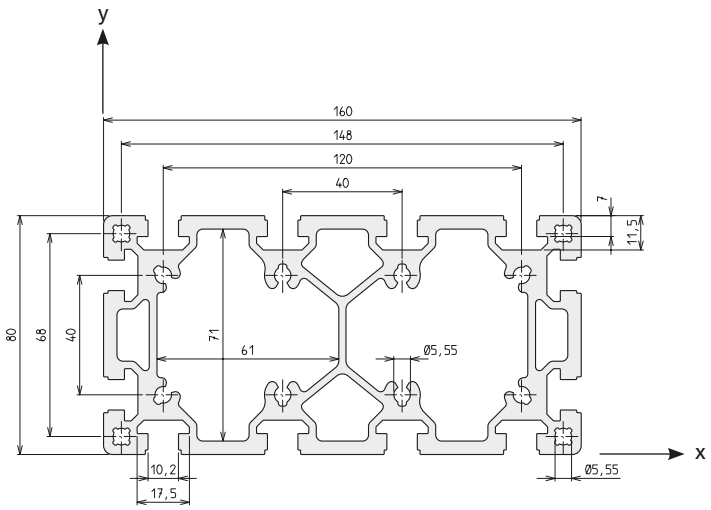

Code No. F-80x160-L profile			Anodised
4925000	Cut to size	max. 6000 mm	Clear
4925001	Bar	6000 mm	Clear

Area	3714	mm²
I_x	291.3	cm⁴
I_y	1024.6	cm⁴
I_t	250.4	cm⁴
W_x	72.8	cm³
W_y	128.1	cm³
Weight	10028	g/m

Connection		Connection to slot geometry	lot sizes	Code No.
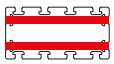	long.	30	–	4336706
		40	–	4336702
	transverse	30	10, 20, 30... pcs	4316706
		40	10, 20, 30... pcs	4246702

For description of slot geometry, please see page 26

Profiles / size 100/120

Order instruction: flange bracket

- Purchase only in lot sizes and a multiple of that see product table below

F-100x100

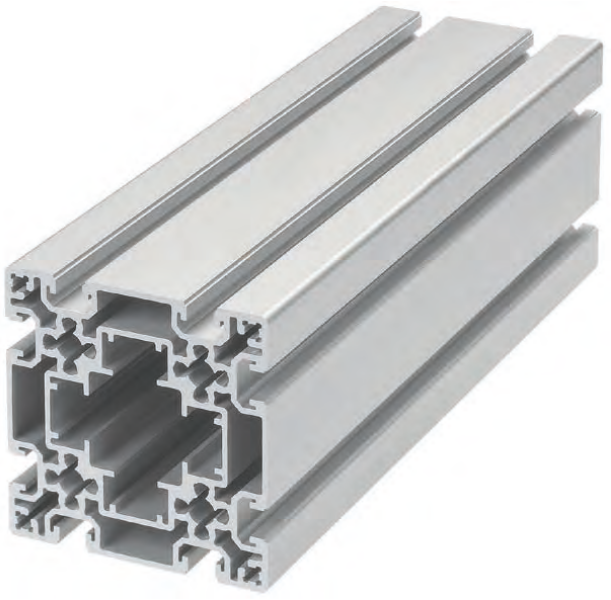

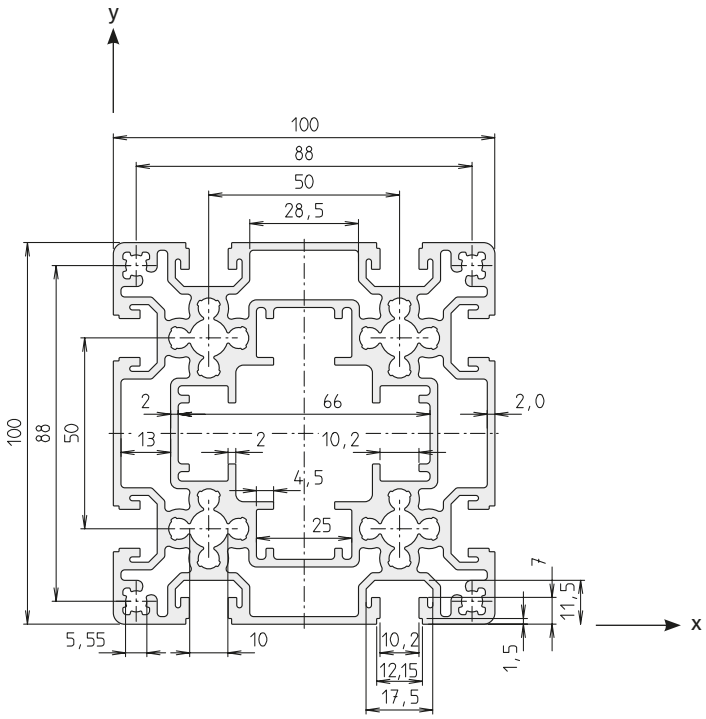

Area	2890	mm^2
I_x	304.1	cm^4
I_y	304.1	cm^4
I_t	156.9	cm^4
W_x	60.8	cm^3
W_y	60.8	cm^3
Weight	7804	g/m

Code No. F-100x100 profile			Anodised
4695000	Cut to size	max. 6000 mm	Clear
4695001	Bar	6000 mm	Clear

Connection	Connection to slot geometry	lot sizes	Code No.
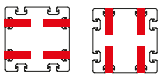 long. + transverse	30	10, 20, 30... pcs	**4086706**
	40	10, 20, 30... pcs	**4086702**

For description of slot geometry, please see page 26

F-120x120



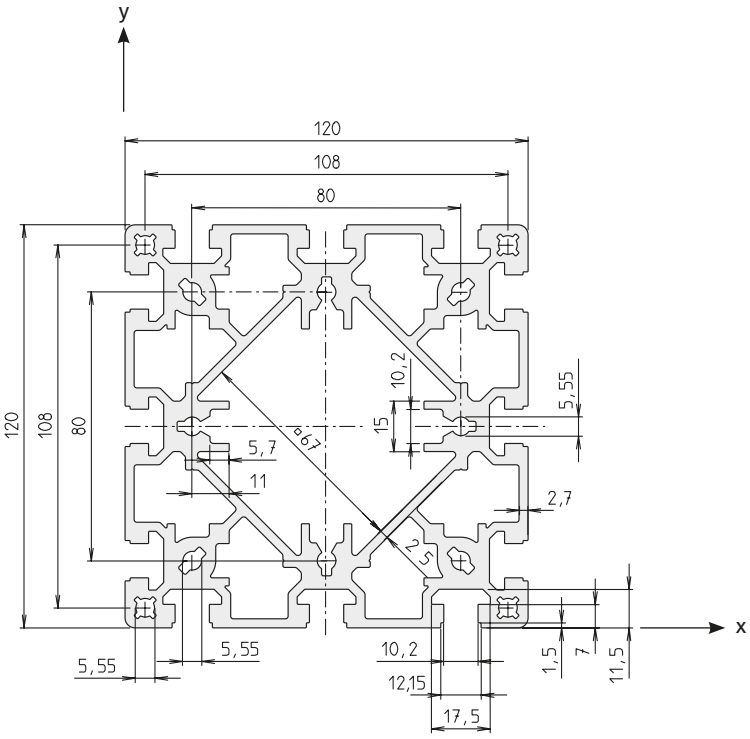

Area	4259	mm^2
I_x	665.1	cm^4
I_y	665.1	cm^4
I_t	349.3	cm^4
W_x	110.8	cm^3
W_y	110.8	cm^3
Weight	11500	g/m

Code No. F-120x120 profile			Anodised
4165000	Cut to size	max. 6000 mm	Clear
4165001	Bar	6000 mm	Clear

Connection	Connection to slot geometry	lot sizes	Code No.
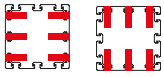 long. + transverse	30	10, 20, 30... pcs	**4816703**
	40	10, 20, 30... pcs	**4816702**

For description of slot geometry, please see page 26

Right-angle connections

Versions



Flange bracket connection



Slot stone -L/E-II



Hidden screw -B-



Compatibility connector



Bracing plate



Connecting plate



Profile angle bracket



Angle brackets -cast-



Angle brackets -sheet steel-



Corner clamp WV

Table of contents

Connection techniques

Right-angle connections

Flange bracket connection ..... p. 48

Slot stone -L/E- II ..... p. 52

Hidden screw -B- ..... p. 52

Compatibility connector ..... p. 53

Bracing plate ..... p. 54

Connecting plate ..... p. 56

Profile angle bracket ..... p. 58

Angle brackets -cast- p.60

Angle brackets -sheet steel- ..... p. 64

Corner clamp WV ..... p. 65

Right-angle connections

Flange bracket connection

- The flange bracket (**1**) is the simplest and most cost-efficient method of connecting profiles.



- No additional machining necessary
- Direct fixing in the profile screw channels
- Direct insertion of RK expansion screws or standard DIN socket head cap screws (**2**)
- Very stable
- Only a list of profile cut lengths is required
- Minimal effort required in construction
- Can be disconnected at any time

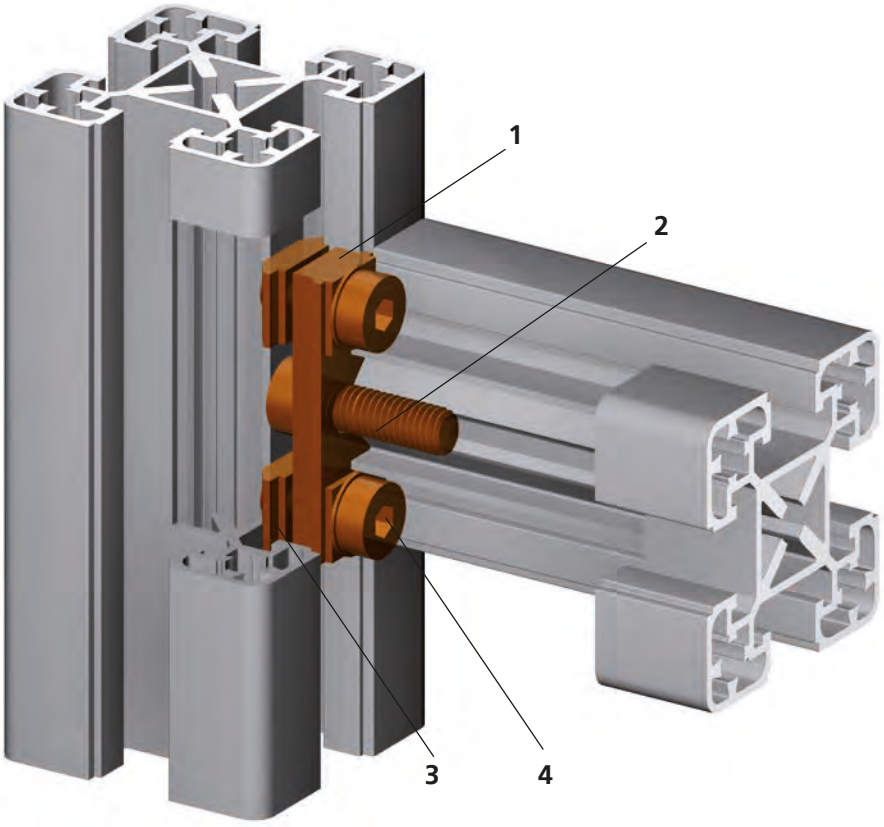

1. Flange bracket
2. Socket head cap screw/RK expansion screw
3. Slot stone with spring clip
4. Socket head cap screw

Position diagram

- The studs (see figure) centre the profiles in relation to one another, thus preventing torsion. This centring effect also allows the profiles to be assembled at right angles to each other.

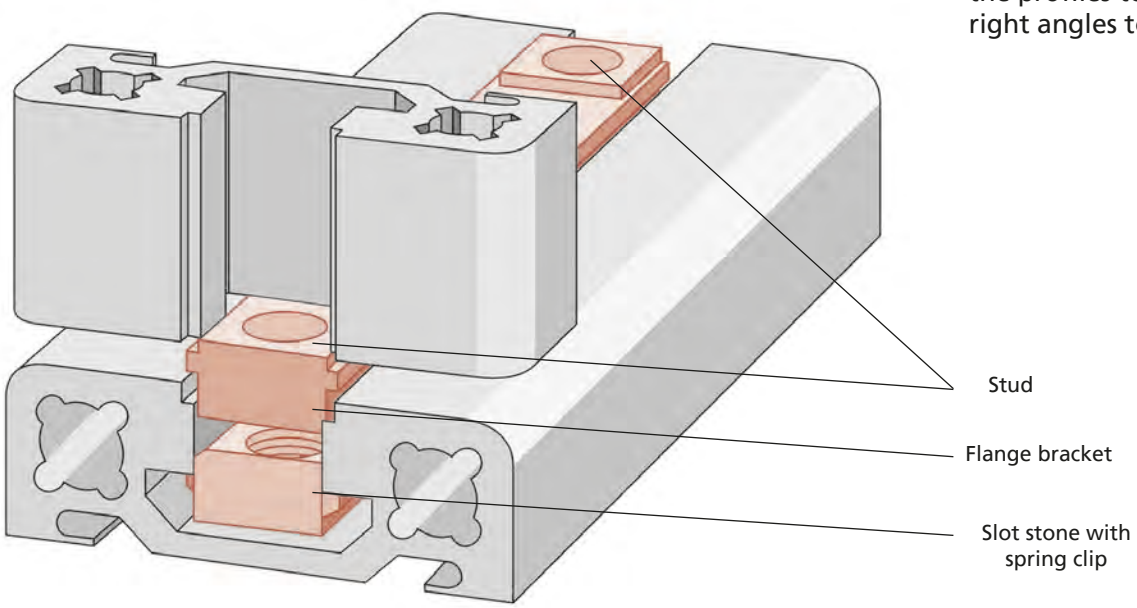

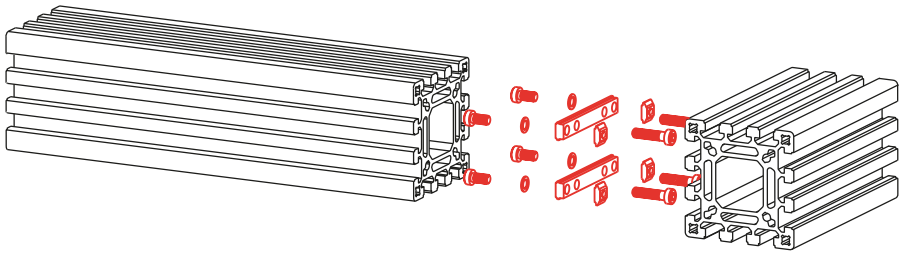

Step 1

Insert flange bracket (studs engage in profile slots) into profile 1 and tighten with hexagon socket keys, self-centred by studs
– Gutting oil and using a drill make it easier to inser the screws.

Profile 1

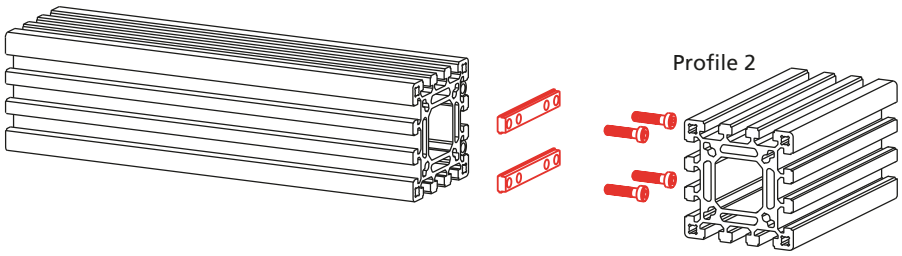

Step 2

Slide/insert edge-first the slot stones with spring clip into profile 2 and slide them into the correct position.

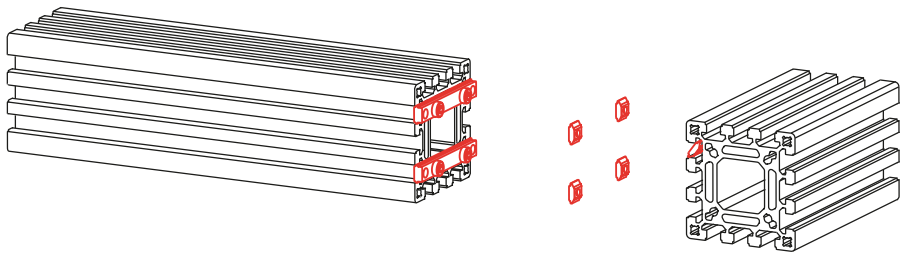

Step 3

Put together profile 1 and profile 2 and connect the flange bracket to the slot stones with spring clip using fixing screws.

Right-angle connections

Order instruction: flange bracket

- Purchase only in lot sizes and a multiple of that see product table below
- Each Code No. includes one flang bracke and fastenings.

Flange brackets

- For static loads
  (For standard DIN screw, please see page 95)

Material: Galvanised steel



Material: zinc plated

Code No.	Type	lot sizes	To slot geom.	For profile (quantity required per connection)
4306709	30	10, 20, 30... pcs	30	F-30x30 (1x)
4306710	30	10, 20, 30... pcs	40	F-30x30 (1x)
4176704	30	10, 20, 30... pcs	30	F-30x60 (2x), F-30x80 (2x), F-30x100 (2x), F-30x120 (3x), F-30x160 (4x)
4176705	30	10, 20, 30... pcs	40	F-30x60 (2x), F-30x80 (2x), F-30x100 (2x), F-30x120 (3x), F-30x160 (4x)
4816703	40	10, 20, 30... pcs	30	F-40x40 (1x), F-40x40-L (1x), F-40x80 (2x), F-40x80-L (2x), F-40x80/3 (2x), F-40x120 (3x), F-40x120 (4x),
4816702	40	10, 20, 30... pcs	40	F-40x40 (1x), F-40x40-L (1x), F-40x80 (2x), F-40x80-L (2x), F-40x80/3 (2x), F-40x120 (3x), F-40x160 (4x),
4246702	80	10, 20, 30... pcs	40	F-30x80 (1x), F-40x80 (1x), F-40x80-L (1x), F-40x80/3 (1x), F-80x80 (2x), F-80x80/2 (2x),F-80x80/2-L (2x), F-80x80-L (1x), F-80x120 (3x), F-80x160 (4x), F-80x160-L (4x)
4086706	50	10, 20, 30... pcs	30	F-50x50 (1x), F-50x50-L (1x), F-50x100 (2x), F-50x200 (2/4x), F-30x100 (2x), F-100x100 (4x)
4086702	50	10, 20, 30... pcs	40	F-50x50 (1x), F-50x50-L (1x), F-50x100 (2x), F-50x200 (2/4x), F-30x100 (2x), F-100x100 (4x)
4226706	60	10, 20, 30... pcs	30	F-30x60 (1x), F-60x60 (2x), F-60x60/1 (1x), F-60x60-L (1x), F-60x120 (4x)
4226702	60	10, 20, 30... pcs	40	F-30x60 (1x), F-60x60 (2x), F-60x60/1 (1x), F-60x60-L (1x), F-60x120 (4x)
4316706	80	10, 20, 30... pcs	30	F-30x80 (1x), F-40x80 (1x), F-40x80-L (1x), F-40x80/3 (1x), F-80x80 (2x), F-80x80/2 (2x), F-80x80/2-L (2x), F-80x80-L (1x), F-80x120 (3x), F-80x160 (4x), F-80x160 (4x)
4326706	120	–	30	F-30x120 (1x), F-40x120 (1x), F-60x120 (2x), F-80x120 (2x)
4326702	120	–	40	F-30x120 (1x), F-40x120 (1x), F-60x120 (2x), F-80x120 (2x)
4336706	160	–	30	F-30x160 (1x), F-40x160 (1x), F-80x160 (2x), F-80x160-L (2x)
4336702	160		40	F-30x160 (1x), F-40x160 (1x), F-80x160 (2x), F-80x160-L (2x)

Material: stainless steel





Material: stainless steel

Code No.	Type	lot sizes	To slot geom.	For profile (quantity required per connection)
4819702	40	–	40	F-40x40 (1x), F-40x40-L (1x), F-40x80 (2x), F-40x80-L (2x), F-40x80/3 (2x), F-40x120 (3x), F-40x160 (4x)
4249702	80	–	40	F-30x80 (1x), F-40x80 (1x), F-40x80-L (1x), F-40x80/3 (1x), F-80x80 (2x), F-80x80/2 (2x), F-80x80/2-L (2x), F-80x80-L (1x), F-80x120 (3x), F-80x160 (4x), F-80x160-L (4x)

Required number of flange brackets to fully assemble two profiles.

Flange brackets

- For low dynamic loads
  (For RK expansion screw, please see page 95)



Code No.	Type	lot sizes	To slot geom.	For profile (quantity required per connection)
4816700	40	10, 20, 30... pcs	40	F-40x40 (1x), F-40x40-L (1x)
4086700	50	10, 20, 30... pcs	40	F-50x50 (1x), F-50x50-L (1x), F-50x100 (2x), F-50x200 (4x)
4226700	60	10, 20, 30... pcs	40	F-60x60 (2x), F-60x60/1 (1x), F-60x60-L (1x), F-60x120 (4x)
4246700	80	10, 20, 30... pcs	40	F-80x80 (2x), F-80x80/2 (2x), F-80x80/2-L (2x), F-80x80-L (1x), F-80x120 (3x), F-80x160 (4x), F-80x160-L (4x)
4326700	120	–	40	F-30x120 (1x), F-40x120 (1x), F-60x120 (2x), F-80x120 (2x)
4336700	160	–	40	F-30x160 (1x), F-40x160 (1x), F-80x160 (2x), F-80x160-L (2x)

Required number of flange brackets to fully assemble two profiles.

Flange brackets

- With equipotential bonding
- The -PA- slot stones have an equipotential bonding effect by destroying the anodised layer.



Code No.	Type	lot sizes	To slot geom.	For profile (quantity required per connection)
4306c09	30	10, 20, 30... pcs	30	F-30x30 (1x)
4816c02	40	10, 20, 30... pcs	40	F-40x40 (1x), F-40x40-L (1x), F-40x80 (2x), F-40x80-L (2x), F-40x80/3 (2x), F-40x120 (3x), F-40x160 (4x)
4086c02	50	10, 20, 30... pcs	40	F-50x50 (1x), F-50x50-L (1x), F-50x100 (2x), F-50x200 (2/4x), F-30x100 (2x), F-100x100 (4x)
4226c02	60	10, 20, 30... pcs	40	F-30x60 (1x), F-60x60 (2x), F-60x60/1 (1x), F-60x60-L (1x), F-60x120 (4x)
4246c02	80	10, 20, 30... pcs	40	F-30x80 (1x), F-40x80 (1x), F-40x80-L (1x), F-40x80/3 (1x) F-80x80 (2x), F-80x80/2 (2x), F-80x80/2-L (2x), F-80x80-L (1x), F-80x120 (3x), F-80x160 (4x), F-80x160-L (4x)

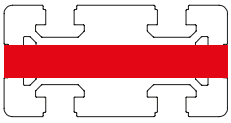

F-40x80 profile
Connection -longitudinal-
(to 40 slot geometry) 1x
Code No. 4246702

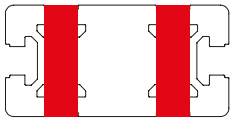

F-40x80 profile
Connection -transverse-
(to 40 slot geometry) 2x
Code No. 4816702

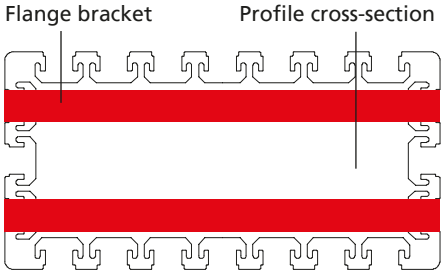

F-80x160 profile
For longitudinal connection
(to 40 slot geometry) 2x
Code No. 4336702

Right-angle connections

Order instruction:

- Purchase only in lot sizes and a multiple of that see product table below

- In the flange bracket sets, the standard -F- slot stones can be replaced by -L/E- slot stones with hole.

- The greater supporting surface reduces the surface pressure

Material: Galvanised steel

Slot stone -L/E- II

(with hole)

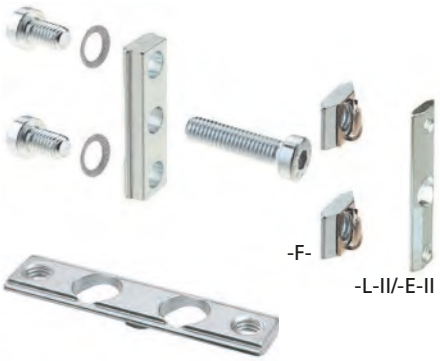

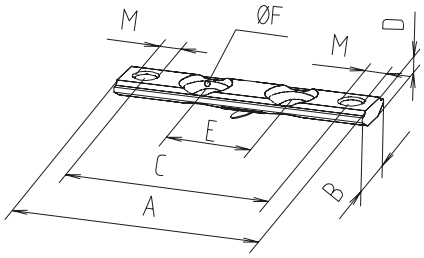

Only have one hole:
Slot stones -L- II types M5 / 29, M6 / 38
Slot stone -E- II type M6 / 38 [mm]

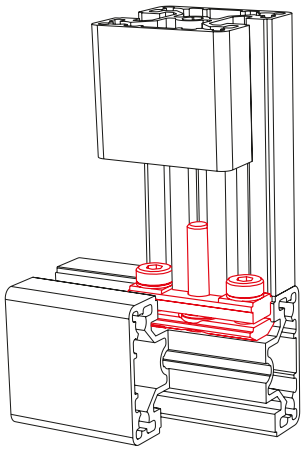

Code No.	Type	lot sizes	To slot geom.	A	B	C	D	E	F	M
Slot stone -L- II										
4006207	M5 / 29	10, 20, 30... pcs	30	29	12	21.5	4	0	8.5	M5
4016206	M6 / 38	10, 20, 30... pcs	40	38	14	28	4	0	10.2	M6
4016207	M6 / 48	10, 20, 30... pcs	40	48	14	38	4	15.5	10.2	M6
4016208	M6 / 58	10, 20, 30... pcs	40	58	14	48	4	20	10.2	M6
4046206	M6 / 78	10, 20, 30... pcs	40	78	14	68	4	40	10.2	M6
Slot stone -E- II (slide-in)										
4006224	M6 / 38	10, 20, 30... pcs	40	38	16.5	28	3.8	0	10.2	M6
4006239	M6 / 58	10, 20, 30... pcs	40	58	16.5	48	3.8	15.5	10.2	M6
4006240	M6 / 78	10, 20, 30... pcs	40	78	16.5	68	3.8	40	10.2	M6

Hidden screw -B-



Cost-effective connection technique for profiles with 30 and 40 slot geometry

Self-tapping – Threading not required

Material: Galvanised steel

Ø 6 mm hole

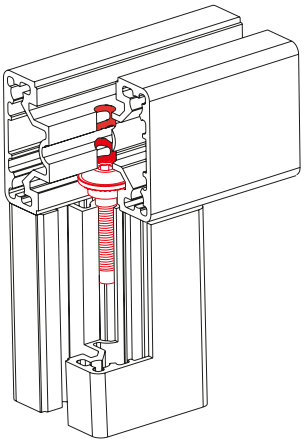

Assembly:

1. Drill a 6 mm hole (e.g. with RK drilling fixture) at the required position in the crossing profile
2. Insert the hidden screw into the profile slot as far as the hole
3. Insert T-handle key through the hole and into the shoulder screw and screw the two profiles to one another

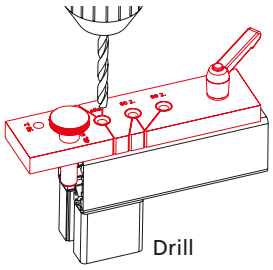
Drill

Code No.	Type	lot sizes	Type
4576510	F-30x30	10, 20, 30... pcs	Hidden screw -B- M5x25
4816510	F-40x40	10, 20, 30... pcs	Hidden screw -B- M6x30
4016516	–	–	Drilling fixture for hidden screw -B-

Compatibility connector 40

- The compatibility connector allows BLOCAN® profiles to be connected to aluminium profiles of other manufacturers.

Material: Galvanised steel

Includes: 2 connectors with fastenings

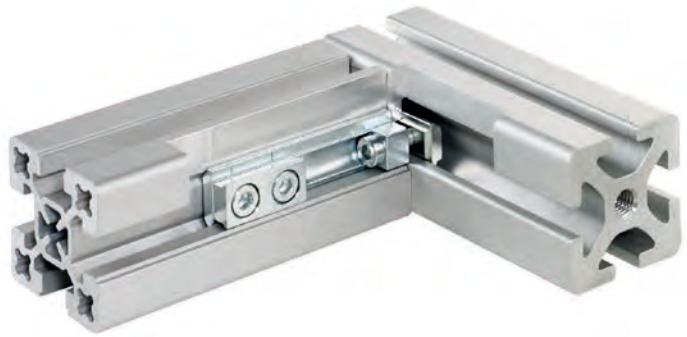



Code No.	Type	Suitable for slot widths
4016581	Compatibility connector 40	8, 10, 14 mm

Position diagram

RK profile, 40 slot geometry

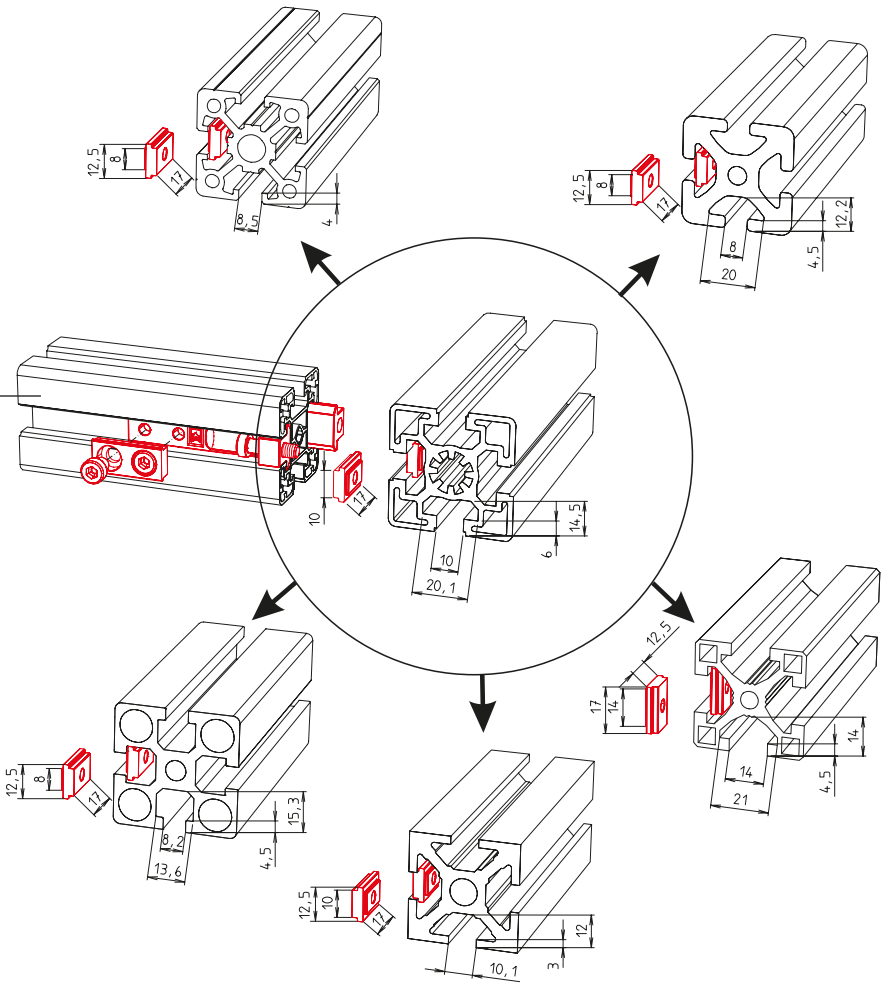

Right-angle connections

Bracing plates

Features:

- Superficial bracing of the three most important junctions L, T, X
- Panels and wire mesh do not need to be notched, as is usually the case with angle brackets.

Material:
black powder-coated steel or grey powder-coated steel

Fixing material
galvanised fastenings

Includes: Bracing plate complete with fixing sets

grey RAL 9006



black RAL 9005



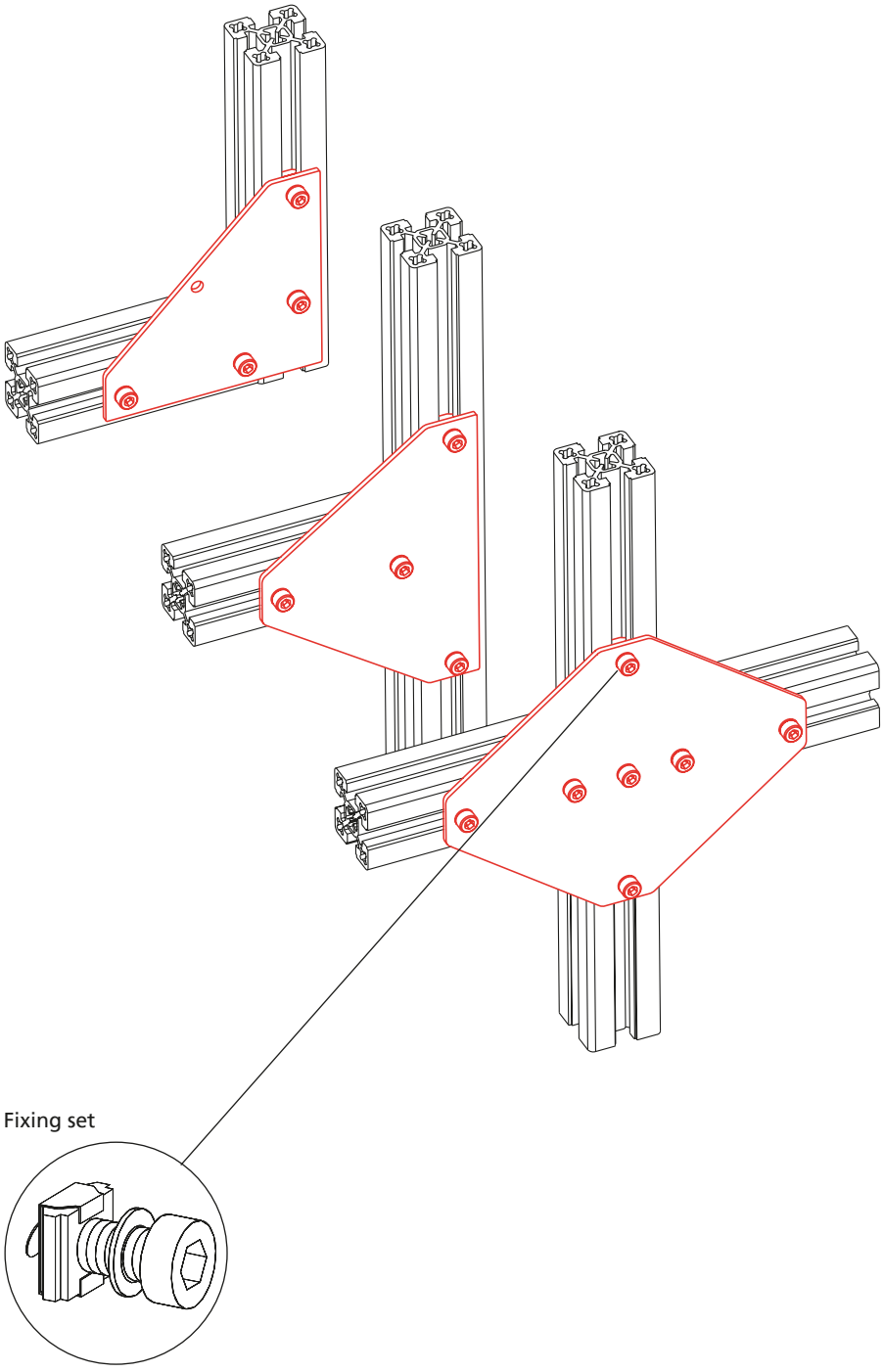

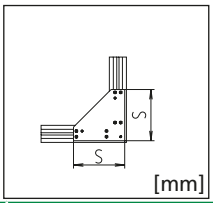

[mm]

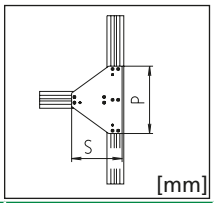

[mm]

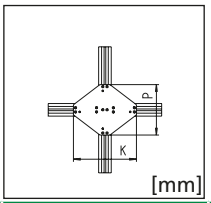

[mm]

Code No.	Type	Wall thick-ness	Type L	Type T	Type X	colour
4002113	30x30	3 mm	S = 90			grey
4002183	30x30	3 mm		S = 90 / P = 120		grey
4002111	30x30	3 mm	S = 90			black
4002181	30x30	3 mm		S = 90 / P = 120		black
4002191	30x30	3 mm			P = 120 / K = 150	black
4012113	40x40	3 mm	S = 120			grey
4012183	40x40, 40x40-L	3 mm		S = 120 / P = 160		grey
4012111	40x40, 40x40-L	3 mm	S = 120			black
4012181	40x40, 40x40-L	3 mm		S = 120 / P = 160		black
4012191	40x40, 40x40-L	3 mm			P = 160 / K = 200	black
4082113	F-50x50, F-50x50-L	4 mm	S = 150			grey
4082183	F-50x50, F-50x50-L	4 mm		S = 150 / P = 200		grey
4082111	F-50x50, F-50x50-L	4 mm	S = 150			black
4082181	F-50x50, F-50x50-L	4 mm		S = 150 / P = 200		black
4082191	F-50x50, F-50x50-L	4 mm			P = 200 / K = 250	black
4122113	F-60x60	4 mm	S = 180			grey
4122183	F-60x60	4 mm		S = 180 / P = 240		grey
4122111	F-60x60	4 mm	S = 180			black
4122181	F-60x60	4 mm		S = 180 / P = 240		black
4122191	F-60x60	4 mm			P = 240 / K = 300	black
4222113	F-60x60-L, F-60x60/1	4 mm	S = 180			grey
4222183	F-60x60-L, F-60x60/1	4 mm		S = 180 / P = 240		grey
4222111	F-60x60-L, F-60x60/1	4 mm	S = 180			black
4222181	F-60x60-L, F-60x60/1	4 mm		S = 180 / P = 240		black
4222191	F-60x60-L, F-60x60/1	4 mm			P = 240 / K = 300	black
4242113	F-80x80-L	4 mm	S = 240			grey
4242183	F-80x80-L	4 mm		S = 240 / P = 320		grey
4242111	F-80x80-L	4 mm	S = 240			black
4242181	F-80x80-L	4 mm		S = 240 / P = 320		black
4242191	F-80x80-L	4 mm			P = 320 / K = 400	black
4042113	80x80, F-80x80/2-L, F-80x80/2	4 mm	S = 240			grey
4042183	80x80, F-80x80/2-L, F-80x80/2	4 mm		S = 240 / P = 320		grey
4042111	80x80, F-80x80/2-L, F-80x80/2	4 mm	S = 240			black
4042181	80x80, F-80x80/2-L, F-80x80/2	4 mm		S = 240 / P = 320		black
4042191	80x80, F-80x80/2-L, F-80x80/2	4 mm			P = 320 / K = 400	black

bracing plates 60x120 and 80x160 (black) type L, T, X on request.
bracing plates type L, T, X aluminium on request.

Right-angle connections

Connecting plate



Slot stone -N-

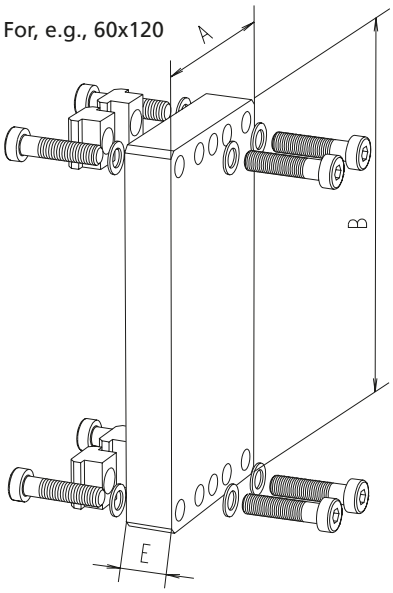

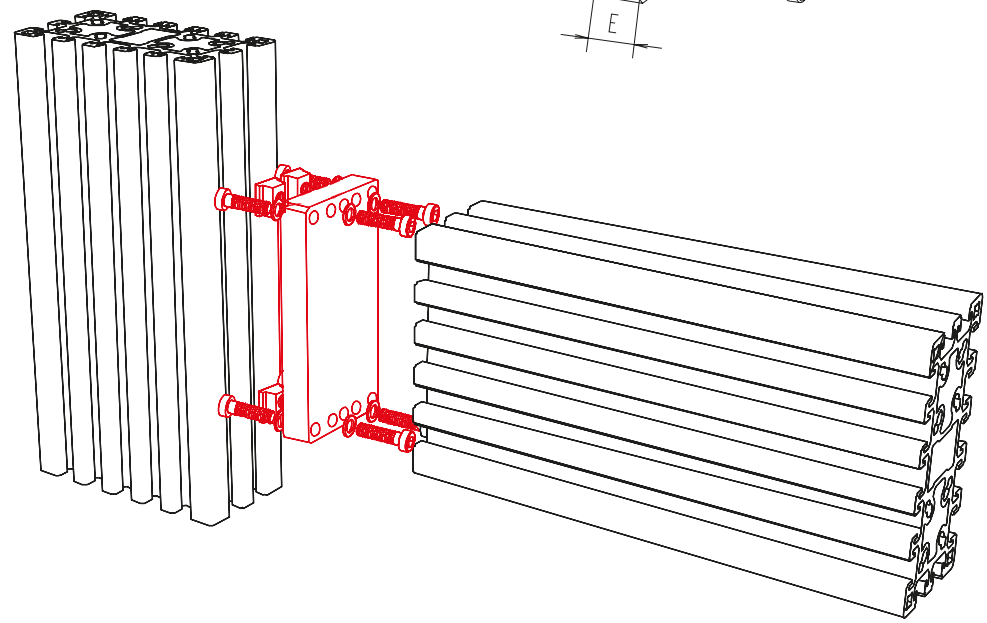

- The connecting plates allow profiles to be fixed in the profile slots at the sides.

Material: Aluminium, galvanised fastenings
Includes: Connecting plate complete with accessories

[mm]

Code No.	Type	A	B	E
Connecting plate connection – face-to-slot				
4005412	30x30	30	30	15
4015412	40x40, 40x40-L	40	40	15
4645411	F-40x120	40	120	15
4655411	F-40x160	40	160	15
4085412	F-50x50, F-50x50-L	50	50	15
4665411	F-50x100	50	100	15
4675411	F-50x200	50	200	15
4225412	F-60x60-L, F-60x60/1	60	60	15
4125412	60x60	60	60	15
4065411	F-60x120	60	120	15
4035412	40x80	40	80	15
4045412	80x80	80	80	15
4245412	F-80x80-L	80	80	15
4685411	F-80x120	80	120	15
4075411	F-80x160	80	160	15
4695411	F-100x100	100	100	15

Right-angle connections

Profile angle bracket
Bar material

- Made from aluminium extruded profiles.
- With integrated screw channel for fastening panels.

Material: Aluminium, clear anodised profile angle bracket
Non-anodised bar
Angle tolerance 90°±5'.
Fixing sets:
The angle brackets can be screwed to the profile with the fixing sets.
Further slot stone types can be found on page 67.
Includes:
1 screw with washer and slot stone.

Size 1



Size 2



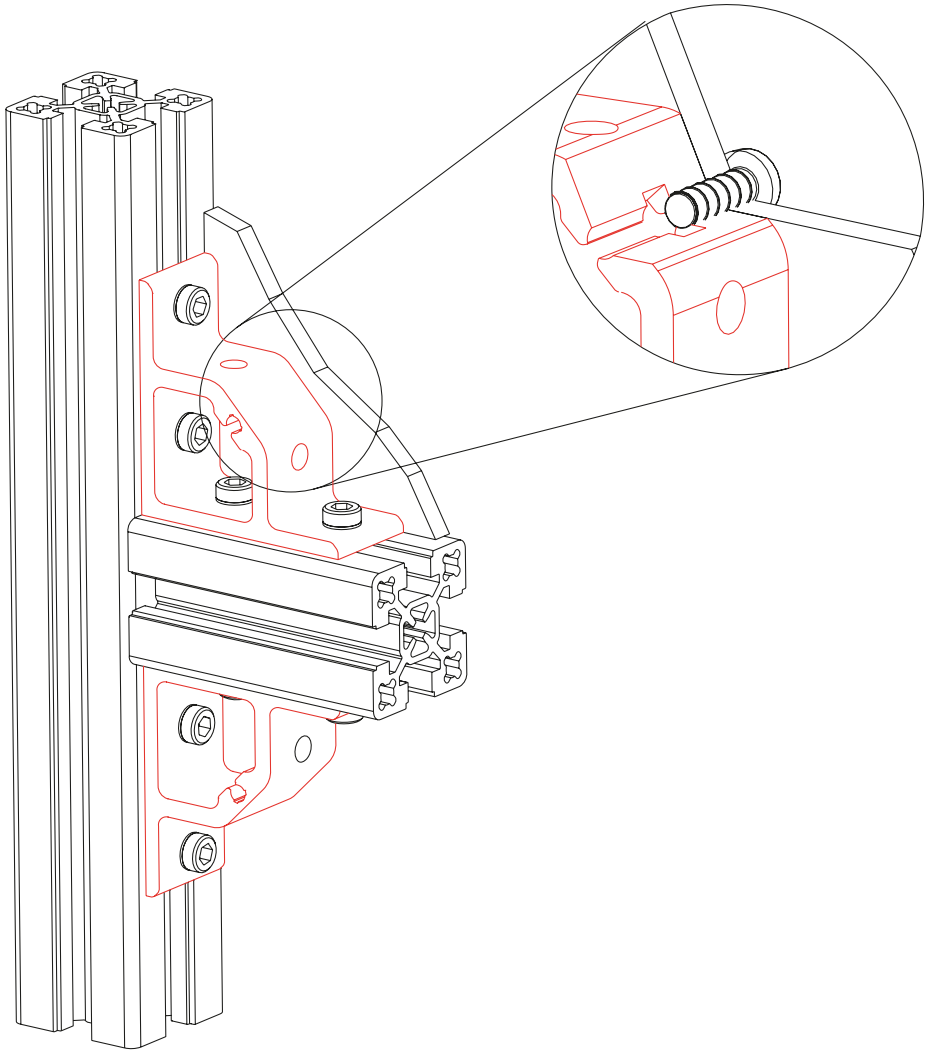

For dimension table, please see opposite page

Code No.	Version			
4010102	Size 1	Cut to size	max. 3000 mm	Non-anodised
4010103		Bar	3000 mm	Non-anodised
4030102	Size 2	Cut to size	max. 3000 mm	Non-anodised
4030103		Bar	3000 mm	Non-anodised

Order instruction:

- Purchase only in lot sizes and a multiple of that see product table below

Profile angle bracket, size 1



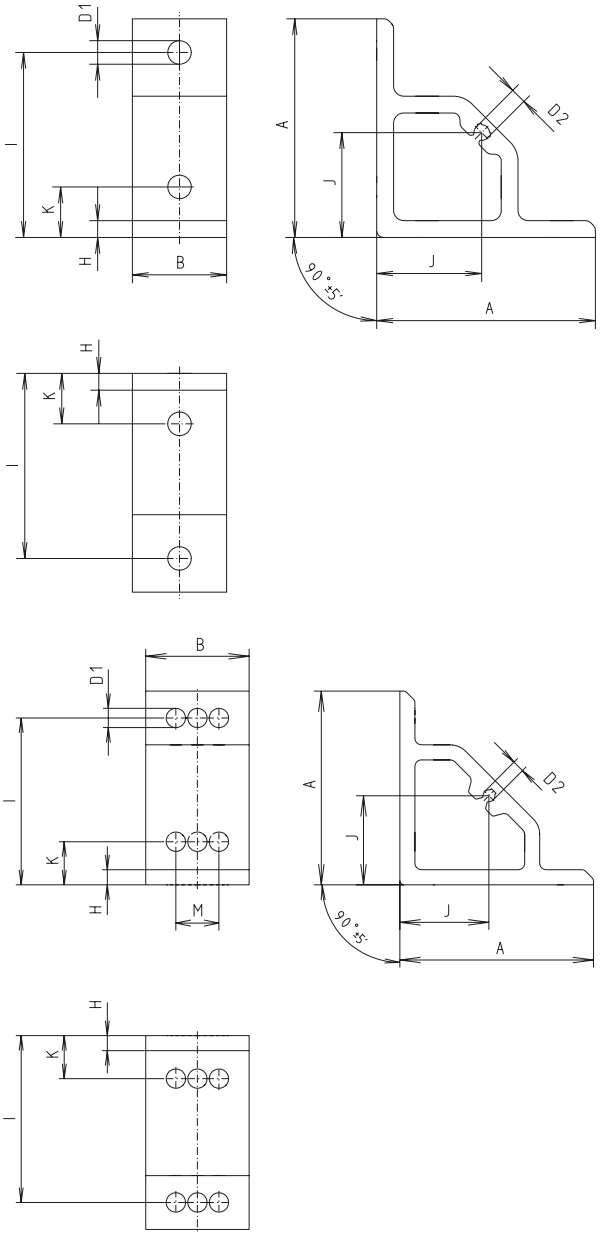

Profile angle bracket, size 2

Figure shows type 40



[mm]

Code No.	Type	Version	A	B	D1	D2	H	I	J	K	M
4015101	40	Size 1	64.15	28	7	4.65	4.15	55	30.3	20	–
4085101	50	Size 1	64.15	38	7	4.65	4.15	55	30.3	15	–
4035101	40	Size 2	89.3	28	9	5.55	6.3	77.5	40.65	20	–
4125101	60	Size 2	89.3	48	9	5.55	6.3	77.5	40.65	20	20
4145101	80	Size 2	89.3	68	9	5.55	6.3	77.5	40.65	20	40

Code No.	Size	Version	lot sizes
Fixing sets (1 slot stone with screw, washer)			
4015105	1	M6x16, slot stone -N-	10, 20, 30... pcs
4035110	2	M8x18, slot stone -N-	10, 20, 30... pcs
4015106	1	M6x16, slot stone -K-	10, 20, 30... pcs
4035111	2	M8x18, slot stone -K-	10, 20, 30... pcs
4015107	1	M6x16, slot stone -R-	10, 20, 30... pcs
4035112	2	M8x18, slot stone -R-	10, 20, 30... pcs

Right-angle connections

Angle brackets -cast-

- A centring rib simplifies assembly and prevents angle bracket torsion. If necessary, this rib can be bent with a pliers.

Material:
Gravity die-cast aluminium



Material:
Die-cast zinc



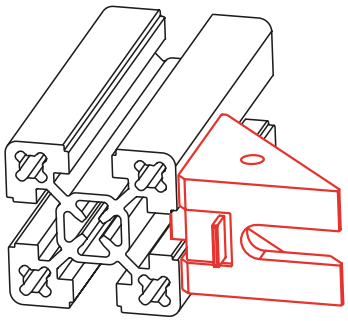

Angle bracket along the profile:
Angle bracket is centred in the profile slot and prevents torsion.

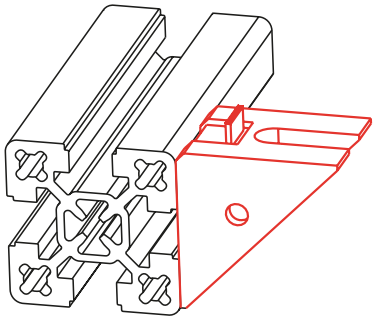

Angle bracket perpendicular to the profile:
Centring rib must be bent.

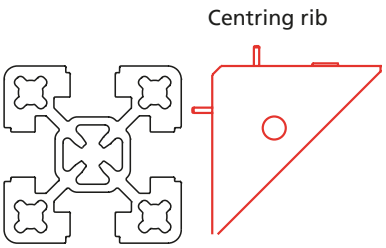

Plastic cover for angle brackets

- For aethetic effect or to protect against soiling, plastic covers may be placed on the angle brackets.
- **Material:** Black polyamide plastic



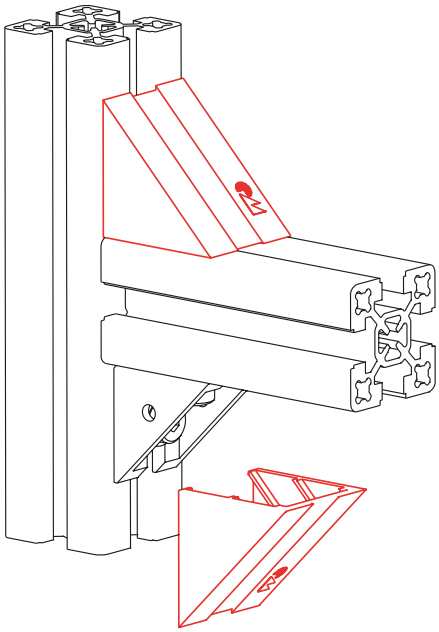

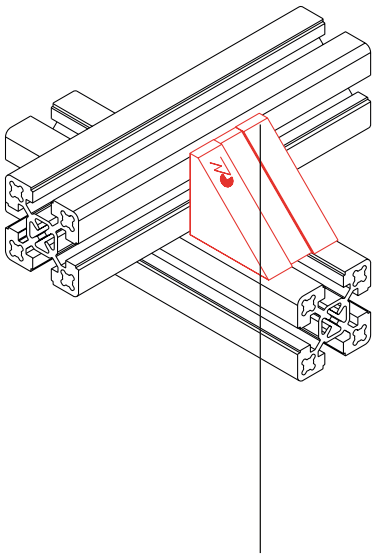

One side with chamfer for crossing connection with one angle bracket 40x40-2

Code No.	Type	lot sizes
4008101	For angle bracket 30x30 (2 braces)	10, 20, 30... pcs
4018102	For angle bracket 40x40 (2 braces)	10, 20, 30... pcs
4018103	For angle bracket 40x40 (2 braces) with chamfer for crossing connection	10, 20, 30... pcs
4028101	For angle bracket 50/60	10, 20, 30... pcs

Right-angle connections

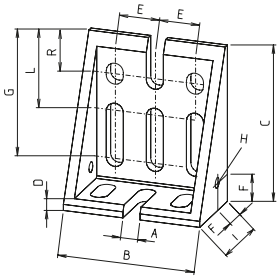

Angle bracket 80x40x80
Gravity die-cast aluminium

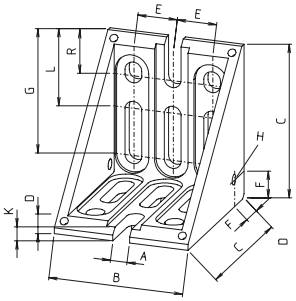

Angle bracket 80
Die-cast zinc

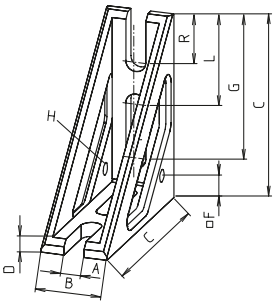

Angle bracket 40x80
Gravity die-cast aluminium

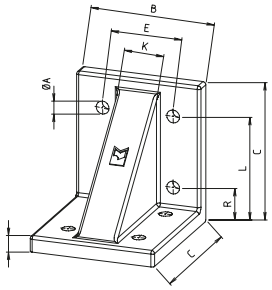

Angle bracket 100
Gravity die-cast aluminium

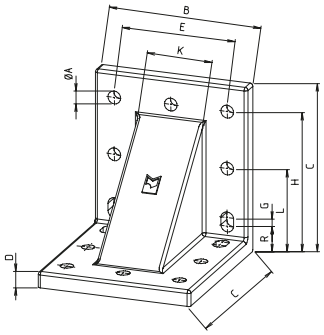

Angle brackets 120 + 160
Gravity die-cast aluminium

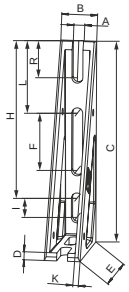

Angle bracket 40x80x160
Gravity die-cast aluminium

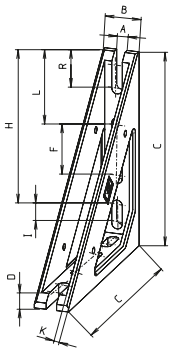

Angle bracket 40x160
Gravity die-cast aluminium

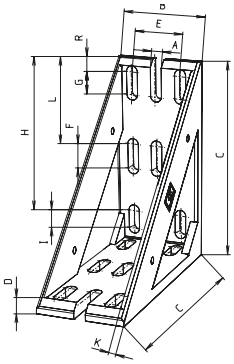

Angle bracket 80x160
Gravity die-cast aluminium

[mm]

Code No.	Type	Version	A	B	C	D	E	F	G	H	I	O	L	R
Cast angle bracket														
4044102	80x40x80	2 braces	8.5	68	78	6	20	14	61	5.2	38	–	38	19
4044101	80	2 braces	8.5	68	78	8	20	14	61	5.2	–	6	38	20
4034100	40x80	2 braces	8.5	28	78	6	–	14	61	5.2	–	–	38	20
4695100	100	–	9	88	98	11	50	–	–	–	–	28	75	25
4165100	120	–	9	108	118	11	80	–	5	100	–	46	60	20
4014100	40x80x160	2 braces	8.5	28	158	6	78	45	–	123	15	4	56	28
4654100	40x160	2 braces	8.5	28	158	11	–	45	–	123	15	5.5	56	28
4444100	160	–	9	148	158	11	120	–	5	140	–	78	80	20
4074100	80x160	2 braces	9	68	158	11	40	20	18	95	15	5.5	70	12

Order instruction:

- Purchase only in lot sizes and a multiple of that see product table below

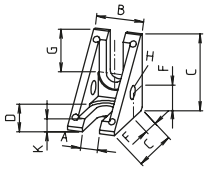

Angle brackets 30 + 40
Die-cast zinc

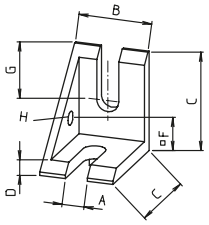

Angle bracket 40-1
Die-cast zinc

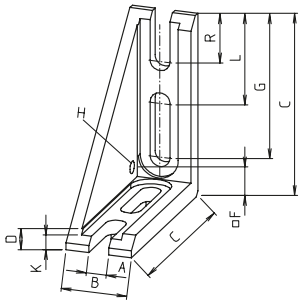

Angle bracket 40x80-1
Die-cast zinc

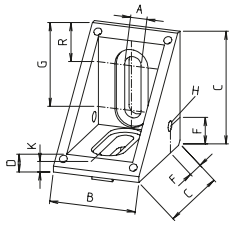

Angle bracket 50/60
Die-cast zinc

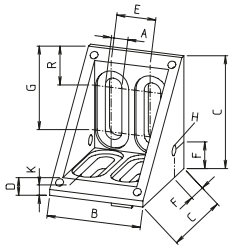

Angle bracket F-60x60
Die-cast zinc

[mm]

Code No.	Type	lot sizes	Version	A	B	C	D	E	F	G	H	I	O	L	R
Cast angle bracket															
4004101	30	10, 20, 30... pcs	2 braces	6.5	18	29	5	–	10	15	5.2	–	4	–	–
4014101	40-1	10, 20, 30... pcs	1 brace	8.4	28	38	5	–	14	19	5.2	–	–	–	–
4014102	40	10, 20, 30... pcs	2 braces	8.4	28	38	5	–	14	19	5.2	–	–	–	–
4034101	40x80-1	10, 20, 30... pcs	1 brace	8.5	28	78	8	–	14	61	5.2	–	6	38	20
4024101	50/60	10, 20, 30... pcs	2 braces	8.5	44	58	8	–	14	41	5.2	–	6	–	18
4124101	F-60x60	10, 20, 30... pcs	2 braces	8.5	48	58	8	20	14	40	5.2	–	6	–	17

Fixing sets

Fixing sets:
The angle brackets can be screwed to the profile with the fixing sets.
Material: Galvanised steel

Further slot stone types can be found on page 84 - 93



Fixing set with slot stone -N- (slot stone is slid into the slot from the side)



Fixing set with slot stone -K- (slot stone can be inserted edge-first into the slot retrospectively)



Fixing set with slot stone -R- (slot stone can be inserted into the slot retrospectively and twisted into position)

Code No.	Type	lot sizes	Version
Fixing sets			
4004110	30	10, 20, 30... pcs	M6x12, slot stone -N-
4026208	40	10, 20, 30... pcs	M8x16, slot stone -N-
4026202	50-80 + 40x80x160	10, 20, 30... pcs	M8x18, slot stone -N-
4694110	100-160 (except 40x80x160)	10, 20, 30... pcs	M8x22, slot stone -N-
4004111	30	10, 20, 30... pcs	M6x12, slot stone -K-
4014111	40	10, 20, 30... pcs	M8x16, slot stone -K-
4024111	50-80 + 40x80x160	10, 20, 30... pcs	M8x18, slot stone -K-
4694111	100-160 (except 40x80x160)	10, 20, 30... pcs	M8x22, slot stone -K-
4004112	30	10, 20, 30... pcs	M6x12, slot stone -R-
4026209	40	10, 20, 30... pcs	M8x16, slot stone -R-
4026210	50-80 + 40x80x160	10, 20, 30... pcs	M8x18, slot stone -R-
4694112	100-160 (except 40x80x160)	10, 20, 30... pcs	M8x22, slot stone -R-

Right-angle connections

Angle bracket -sheet steel-



Steel angle bracket: St 37, 3 mm thick

Material:
Powder-coated steel
Includes:
Complete with slot centring pins

Slot centring pins

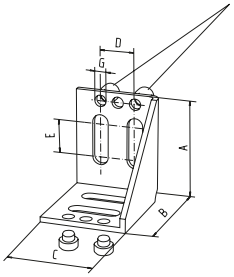

Steel angle bracket 60

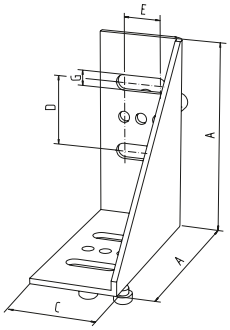

Steel angle bracket 60 / 60x120

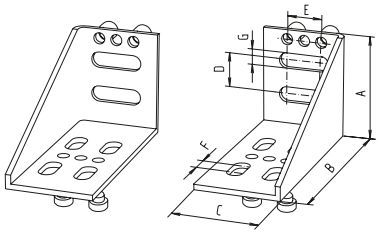

Steel angle bracket 60x120, 1 brace left or right

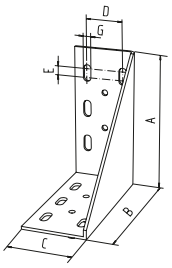

Steel angle bracket 80 / 80x160

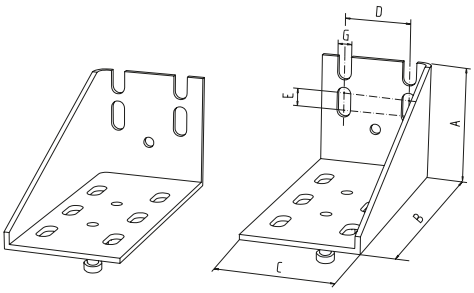

Steel angle bracket 80x160, 1 brace left or right

[mm]

Code No.	Type	Version	A	B	C	D	E	F	G	H	R
Steel angle bracket -3 mm sheet steel-											
4120101	60	1 brace	58	58	48	20	20	–	9	–	–
4060101	60/60x120	1 brace	108	108	48	20	20	–	9	–	–
4060102	60x120	1 brace right	58	108	48	40	20	10	9	–	–
4060103	60x120	1 brace left	58	108	48	40	20	10	9	–	–
4070101	80/80x160	1 brace	148	148	68	40	10	–	9	–	–
4070102	80x160	1 brace right	68	148	68	40	10	–	9	–	–
4070103	80x160	1 brace left	68	148	68	40	10	–	9	–	–

Order instruction:

- Purchase only in lot sizes and a multiple of that see product table below

Fixing sets

Further slot stone types can be found on page 67 - 65

Includes: 1 screw with washer and slot stone.



Fixing set with slot stone -N- (slot stone is slid into the slot from the side)



Fixing set with slot stone -R- (slot stone can be inserted into the slot retrospectively and twisted into position)

Code No.	Type	lot sizes	Version
Fixing sets			
4120110	All	10, 20, 30... pcs	M8x14, slot stone -N-
4120112	All	10, 20, 30... pcs	M8x14, slot stone -R-

Corner clamp WV

Material: Aluminium, stainless steel fixing.
For further clamping elements, please refer to the catalogue "Connecting Technology"



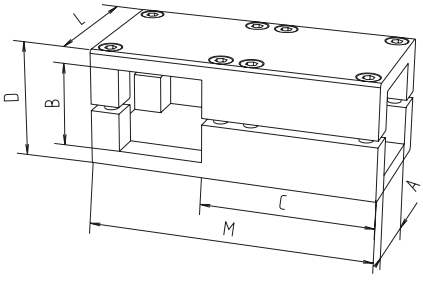

[mm]

Code No.	Type	Version	A	B	C	D	L	M
513000050300	WV 30	30.2	30.2	30.2	69	42	56	112
514000050300	WV 40	40.3	40.3	40.3	82	56	68	136
515000050300	WV 50	50.4	50.4	50.4	102	70	85	170
516000050300	WV 60	60.4	60.4	60.4	127	79	105	210

Cross connections

Versions



Keyed clamp connector -Q-



Mitre joint -transversal-



Cross connector
-swiveling-

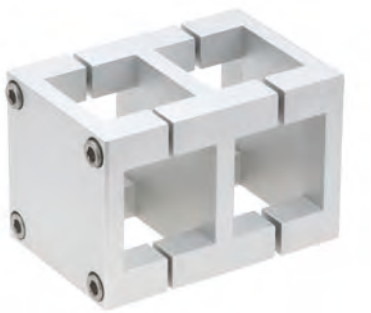

Cross clamp KV

Table of contents

Connection techniques

Cross connections

Keyed clamp connector -Q- ..... p. 68

Mitre joint -transversal- ..... p. 68

Cross connector -swiveling- ..... p. 69

Cross clamp KV ..... p. 69

Cross connections

Keyed clamp connector -Q-



- Simple realisation of cross connections by bracing the profiles
- No profile machining necessary

Material: Galvanised steel
Includes: Complete fixing set for one connection

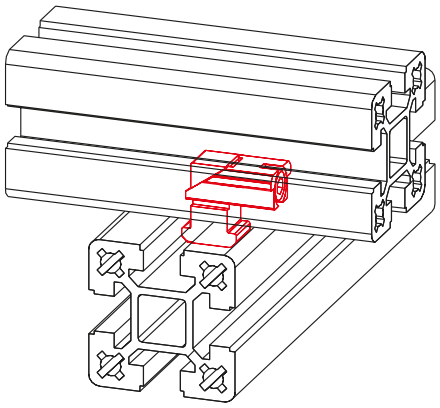

Code No.	Type
4016521	40 slot geometry

Mitre joint -transversal-

- For connecting crossing profiles
- For retrofitting in structures
- Profile alignment not necessary

Includes: Complete fixing set for one connection

Material: Galvanised steel



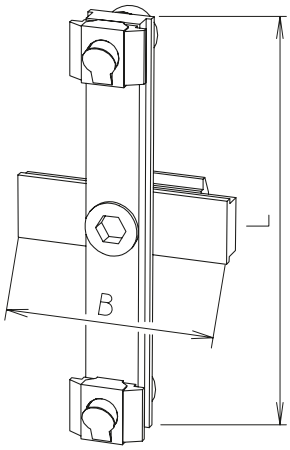

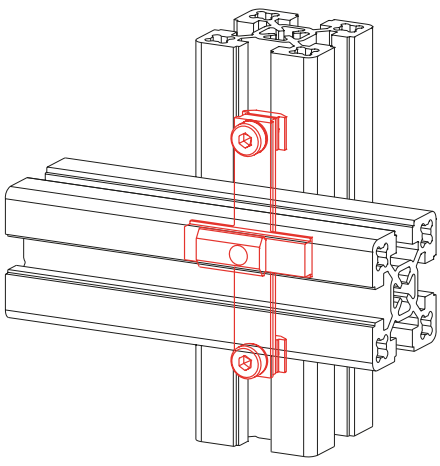

Code No.	Type	B	L	Version
4026502	60/80	40	102	With slot stone -F-
4026512	60/80	40	102	With slot stone -L-
4016502	40/50	40	78	With slot stone -F-
4016512	40/50	40	78	With slot stone -L-

Cross connector -swiveling-



- For connection of crossing profiles
- 360° swiveling
- Fixation in all positions

Material: Galvanised steel
Inclides: Complete fixing set for 1/10 connections

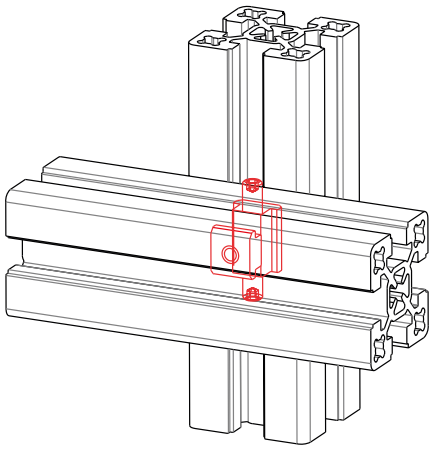

Code No.	Type
4016584	40 slot geometry

Cross clamp KV

Material: Aluminium.
Stainless steel fixing
For further clamping elements, please refer to the catalogue "Connecting Technology"

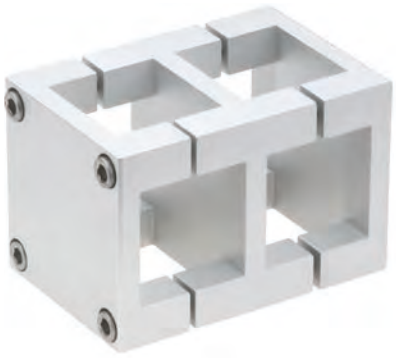

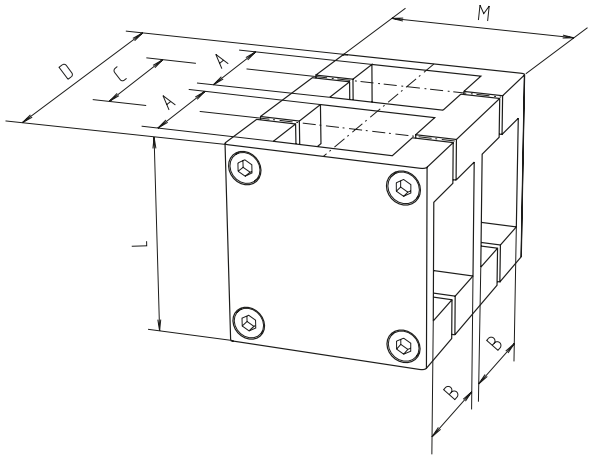

[mm]

Code No.	Type	A	B	C	D	L	M
503000050300	KV 30	30.2	30.2	36	78	56	56
504000050300	KV 40	40.3	40.3	48	104	68	68
505000050300	KV 50	50.4	50.4	60	130	85	85
506000050300	KV 60	60.4	60.4	72	169	105	105

Angle connections

Versions

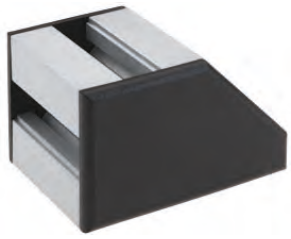

Frame joint 2x40



Frame joint 3x40



Profile joint -E-



Profile joint



Double profile joint



Mitre joint -W1-



Mitre joint -W2-



Steel swivel

Table of contents

Connection techniques

Angle connections

Frame joint 2x40 ..... p. 72
Frame joint 3x40 ..... p. 72
Profile joint -E- ..... p. 73
Profile joint ..... p. 74
Double profile joint ..... p. 74
Mitre joint -W1- ..... p. 75
Mitre joint -W2- ..... p. 75
Steel swivel ..... p. 76

Angle connections

Frame joint 2x40

- Frame joint with 2 connecting options 40x40 and/or 40x80, each set at 45°.
- Complete with fixing set.

Material: Aluminium.
Plastic cover plates
Cut to required length.

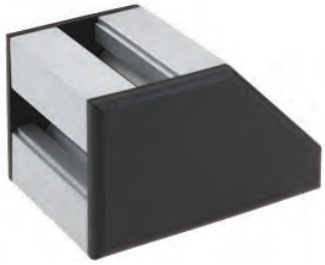

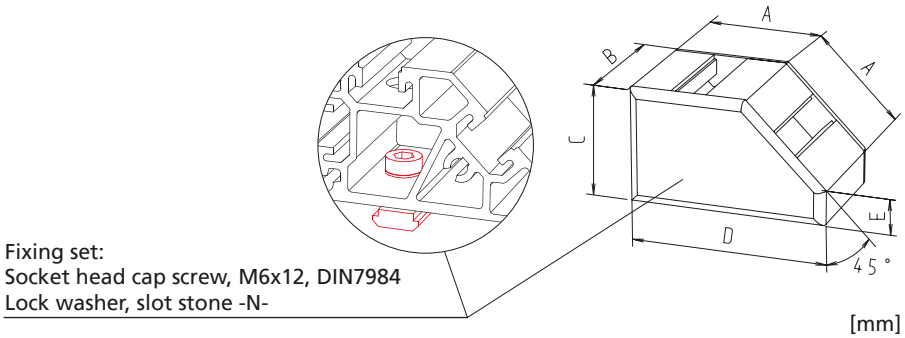

Fixing set:
Socket head cap screw, M6x12, DIN7984
Lock washer, slot stone -N-

[mm]

Code No.	Type	A	B	C	D	E
4155650	40	40	40	40	68	11.8
4155651	40x80	40	80	40	68	11.8

Frame joint 3x40

- Frame joint with 3 connecting options 40x40 and/or 40x80, each set at 45°.
- Complete with fixing set.

Material: Aluminium.
Plastic cover plates
Cut to required length.



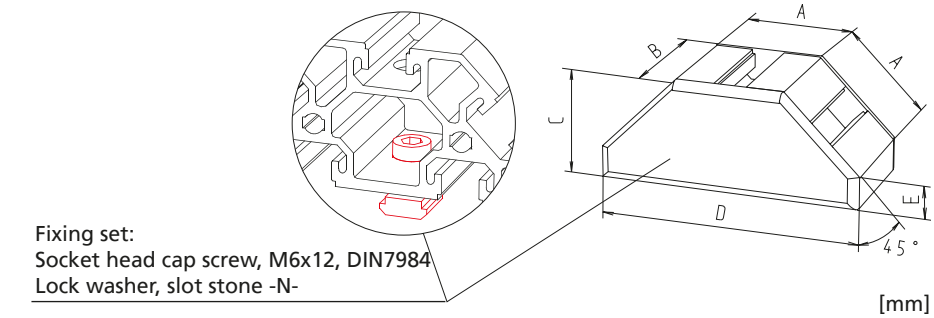

Fixing set:
Socket head cap screw, M6x12, DIN7984
Lock washer, slot stone -N-

[mm]

Code No.	Type	A	B	C	D	E
4255650	40	40	40	40	96.6	11.8
4255651	40x80	40	80	40	96.6	11.8

Position diagram

- With unsupported lengths and dynamic alternating stresses, bracing elements should be added because the material combination is steel aluminium.
- Such elements may be angle brackets, bracing plates and cross strut profiles as are typically used in framework.

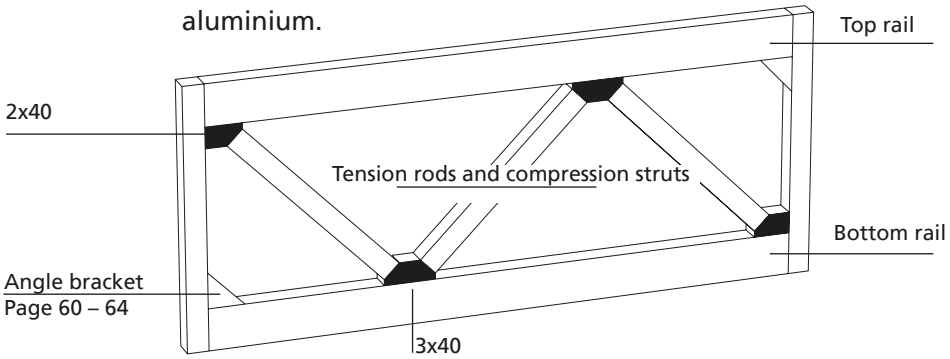

Profile joint -E-

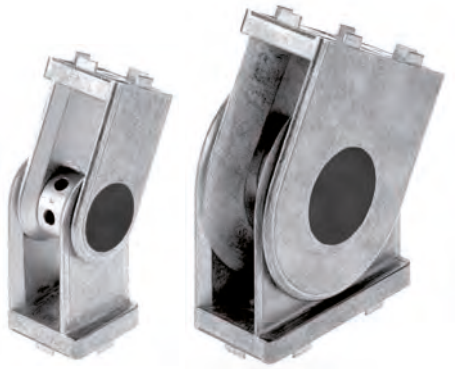

30x30 40x80

- These die-cast joints feature eccentric height compensation.

Material: Die-cast zinc joint, galvanised steel eccentric bolt and fastenings
Includes: Does not include fixing set (see table)

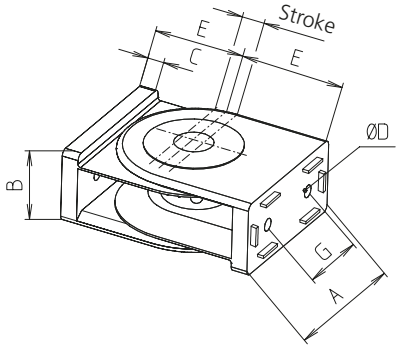

Code No.	Type	Pivoting range	Stroke	A	B	C	D	E	G
4032550	Joint 30x30	250°	4	30	30	8	6,1	42	0
4000530	Fixing set to 30 slot geometry								
4010530	Fixing set to 40 slot geometry								
4032540	Joint 40x80	180°	4	80	40	9	6,6	52	40
4010521	Fixing set to 40 slot geometry								
4810520	Fixing set on the face of Type 40								

Note: One fixing set contains material for connecting one profile.
For the profile joint 40x80, 2 fixing sets are required per side.

Attention: discontinued model
Type 30x30, Code No. 4032550
Type 40x80, Code No. 4032540

Profile joint



40x40



40x80

Material: joint 40x40 die casting zinc, joint 40x80 die-cast Aluminum, fixing material Galvanized steel

Includes:
centering pieces; does not include fixing set (see table)

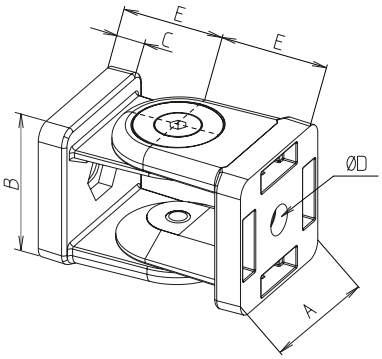

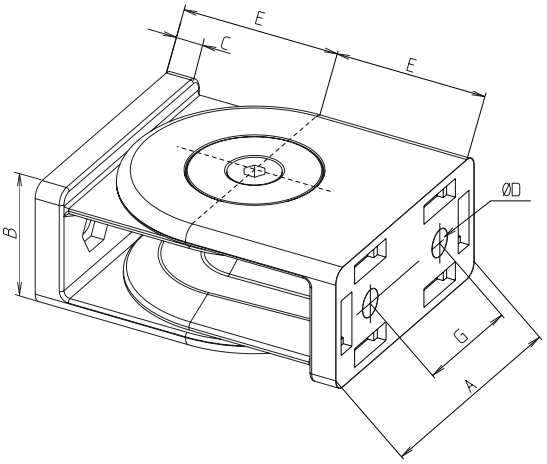

Code No.	Type	Pivoting range	A	B	C	D	E	G
4D32500	Profile joint 40x40	180°	40	40	9	8,5	30	-
4392500	Profile joint 40x80	180°	80	40	9	8,5	50	40
4572501	Fixing set to 30 slot geometry							
4D32501	Fixing set to 40 slot geometry							
4D32502	Fixing set front side for F-40x40, F-40x80, F-80x80							

Note: One fixing set contains material for connecting one profile.
For the profile joint 40x80, 2 fixing sets are required per side.

Angle connections

Profile joint

- Depending on the fixing set, the profile joint can be used with the profiles given below
- The joint can be infinitely adjusted through 180°.

Material: Aluminium
Galvanised fastenings
Includes:
Complete with fixing set (see table)

F-40, figure with slot-to-slot fixing set



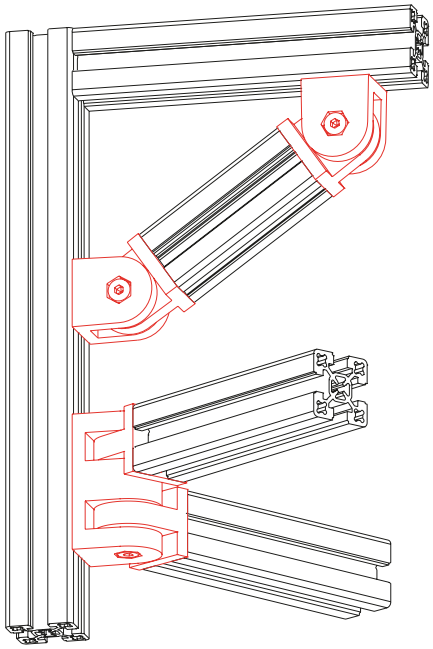

F-40

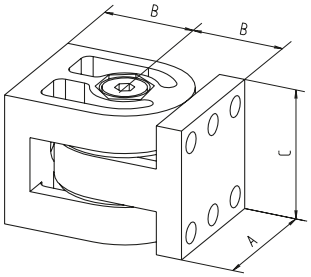

F-40x80

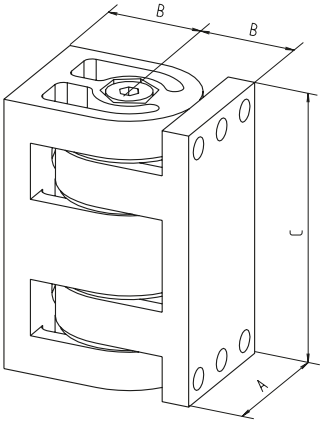

[mm]

Code No.	Type	Fixing set	A	B	C
4015550	Profile joint F-40	without fixing set	40	28	40
4015551		Face-to-face	40	28	40
4015552		Slot-to-slot	40	28	40
4015553		Face-to-slot	40	28	40
4035550	Profile joint F-40x80	without fixing set	40	28	80
4035551		Face-to-face	40	28	80
4035552		Slot-to-slot	40	28	80
4035553		Face-to-slot	40	28	80

Double profile joint

Material: Aluminium, galvanised fastenings
Includes:
Complete with fixing set (see table)

F-40x80-2

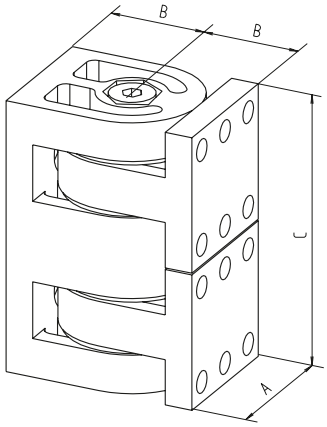

F-40x80-2, figure with face-to-slot fixing set



[mm]

Code No.	Type	Fixing set	A	B	C
4035555	Double profile joint F-40x80-2	without fixing set	40	28	80
4035556		Face-to-face	40	28	80
4035557		Slot-to-slot	40	28	80
4035558		Face-to-slot	40	28	80

Mitre joint -W1-

- Connects profiles at any angle
- No alignment necessary

Material: Galvanised steel
Includes: Complete fixing set for one mitre joint -W-



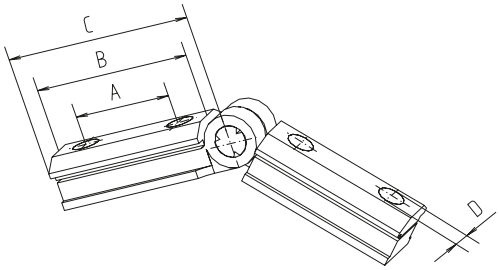

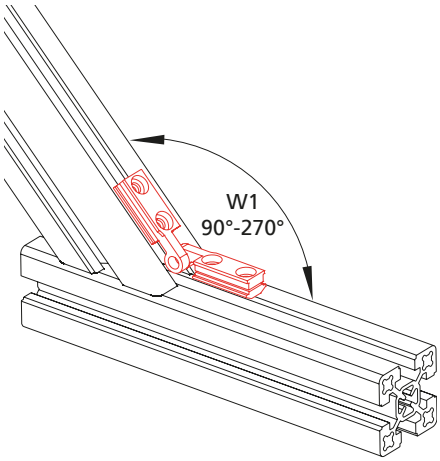

[mm]

Code No.	Type	Slot geometry	A	B	C	D
4016506	W-1	30	19	30	41	M4
4016504	W-1	40	19	30	41	M5

Mitre joint -W2-

Material: Galvanised steel
Includes: Complete fixing set for one mitre joint -W-



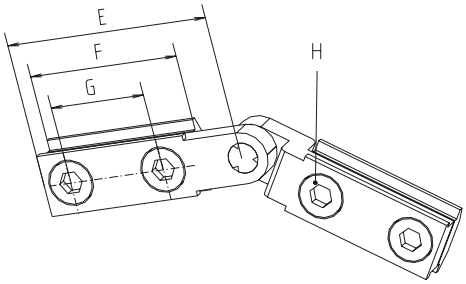

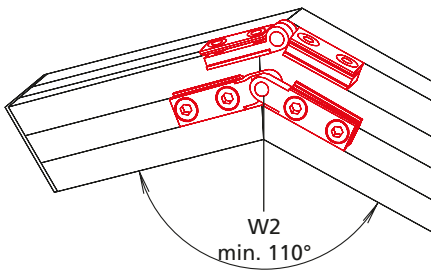

[mm]

Code No.	Type	Slot geometry	E	F	G	H
4016507	W-2	30	41	30	19	M4
4016505	W-2	40	41	30	19	M5

Angle connections

Steel swivel

- Using steel swivels enables Structural profiles to be adjusted to any angle

Material: Galvanised steel
Includes: 1 steel swivel with one complete fixing set for one profile connection.
A clamping level can be ordered as an optional extra



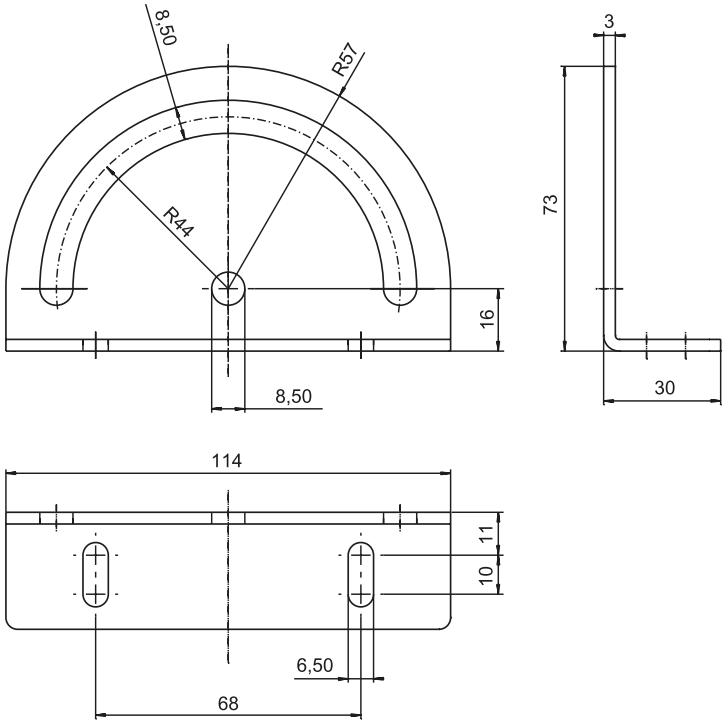

[mm]

Code No.	Type	Slot geometry
WAC042000144	Steel swivel with screw	40
WAC042000145	Clamping lever	40



Face-to-face and parallel connections

Versions



Mitre joint -L-



Connecting plate



Keyed clamp connector -P-



Connection element -plastic-



Connection element -aluminium-



Connection element -S-

Table of contents

Connection techniques

Face-to-face and parallel connections

Mitre joint -L- ..... p. 80

Keyed clamp connector -P- ..... p. 80

Connecting plate ..... p. 81

Connection element -plastic- ..... p. 82

Connection element -aluminium- ..... p. 82

Connection element -S- ..... p. 83

Face-to-face and parallel connections

Mitre joint -L-

- For face-to-face connections and for extending profiles
- Flush profile finish
- Automatic centring

Material: Galvanised steel
Includes: Complete fixing set for one connection



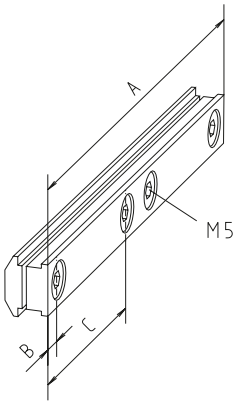

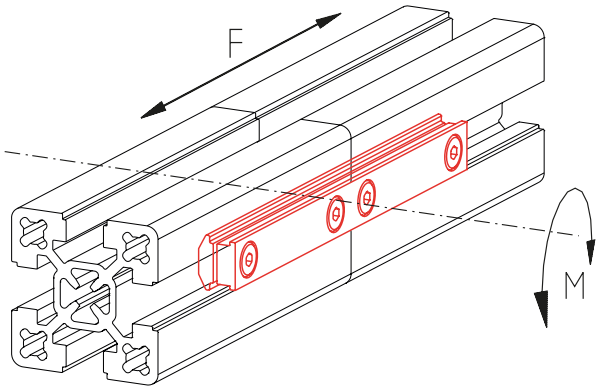

[mm]

Code No.	Type	To slot geometry	A	B	C
4006503	L30	30	120	7	52
4016503	L40	40	120	7	52

Keyed clamp connector -P-

- For parallel flange mounting of profiles
- No mechanical machining necessary.

Material: Galvanised steel
Includes: Complete fixing set for one connection



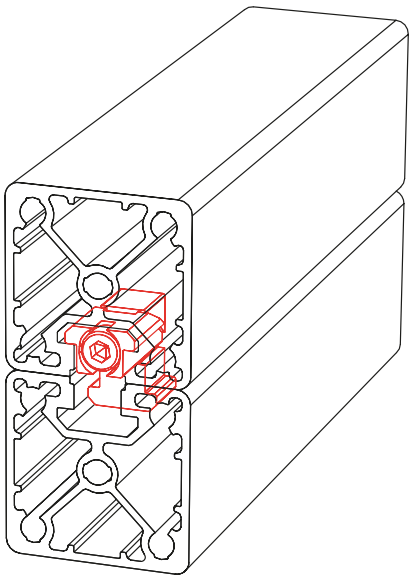

Code No.	Type
4016522	40 slot geometry

Connecting plate

- For extending profiles

Material: Aluminium, galvanised fastenings
Includes: Complete fixing set for one connection

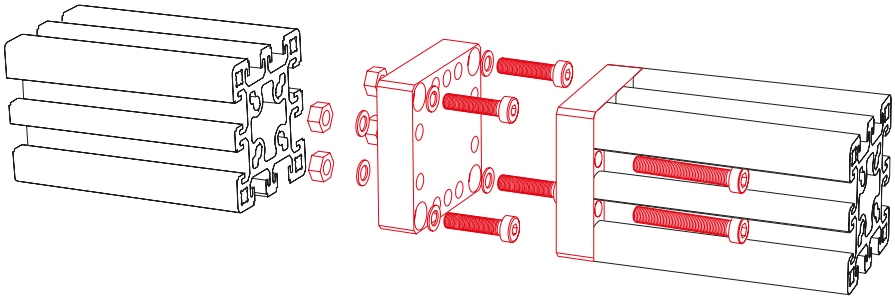



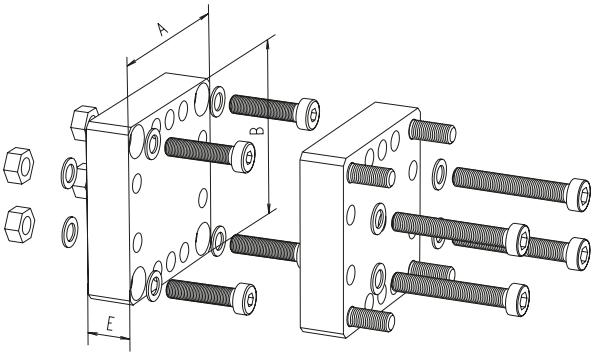

[mm]

Code No.	Type	A	B	E
4005452	30x30	30	30	15
4015452	40x40, 40x40-L	40	40	15
4305451	F-30x60	30	60	15
4315451	F-30x80	30	80	15
4295451	F-30x100	30	100	15
4325451	F-30x120	30	120	15
4335451	F-30x160	30	160	15
4035452	40x80, F-40x80-L, F-40x80/3	40	80	15
4645451	F-40x120	40	120	15
4655451	F-40x160	40	160	15
4085452	F-50x50, F-50x50-L	50	50	15
4665451	F-50x100	50	100	15
4675451	F-50x200	50	200	15
4025452	F-60x60, F-60x60-L, F-60x60/1	60	60	15
4065451	F-60x120	60	120	15
4045452	80x80, F-80x80-L	80	80	15
4685451	F-80x120	80	120	15
4075451	F-80x160, F-80x160-L	80	160	15
4695451	F-100x100	100	100	15
4165451	F-120x120	120	120	15

Face-to-face and parallel connections

Connection element
with angle compensation
-plastic-



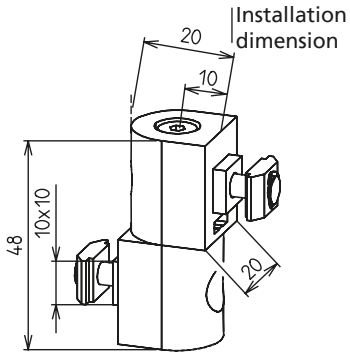

- The plastic element allows profiles to be connected in parallel. The profiles may be twisted axially.

Material: Black plastic
Includes: Complete fixing set for one connection.
Galvanised fastenings.

Assembly:
1. The individual halves are positioned on the profiles and fastened.
2. Then the two halves of the element are connected with a socket head cap screw.

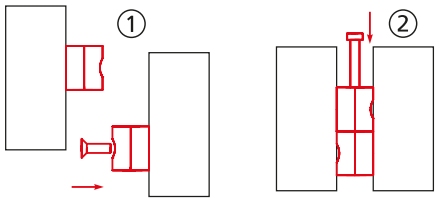

Code No.	Slot geometry
4008657	30
4018657	40
4008658	30 to 40

Connection element
with angle compensation
-aluminium-



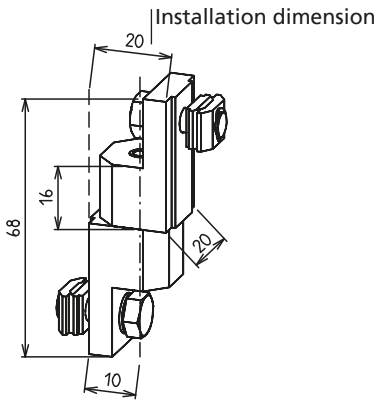

- The advantages over the above plastic version are resistance and easier assembly. In addition, the elements can be height adjusted retrospectively without disassembling the mounted profile frame.

Material:
Vibration finished aluminium,
Includes: Complete fixing set for one connection.
Galvanised fastenings.

Assembly:
1. First the individual halves of the connection element (no. 1) are assembled. The elements with pin face eachother in the centre of the profile. The lower element with hole (no. 2) is slightly tightened so that it can still be moved in the slot.
2. The profiles/frames to be connected are now mounted in the connection element.
3. The element still loose in the slot (no.3) is pushed onto the pin and fixed.

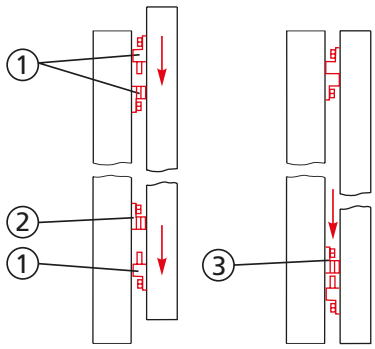

Code No.	Slot geometry
4005657	30
4015657	40
4005658	30 to 40

Connection element -S- (Click & Safe)

- Operation complies with EU Machinery Directive 2006/42/EC
- Extremely quick and simple assembly without tools and without fastenings
- Angle compensation ±5 degrees between post and frame
- Disassembly only possible with a special unlocking tool according to the machinery directive

Material: Plastic
Galvanised fastenings
Includes: Connection elements to take one profile frame (2 tops, 2 bottoms, fastenings)

Connection element



Unlocking tool



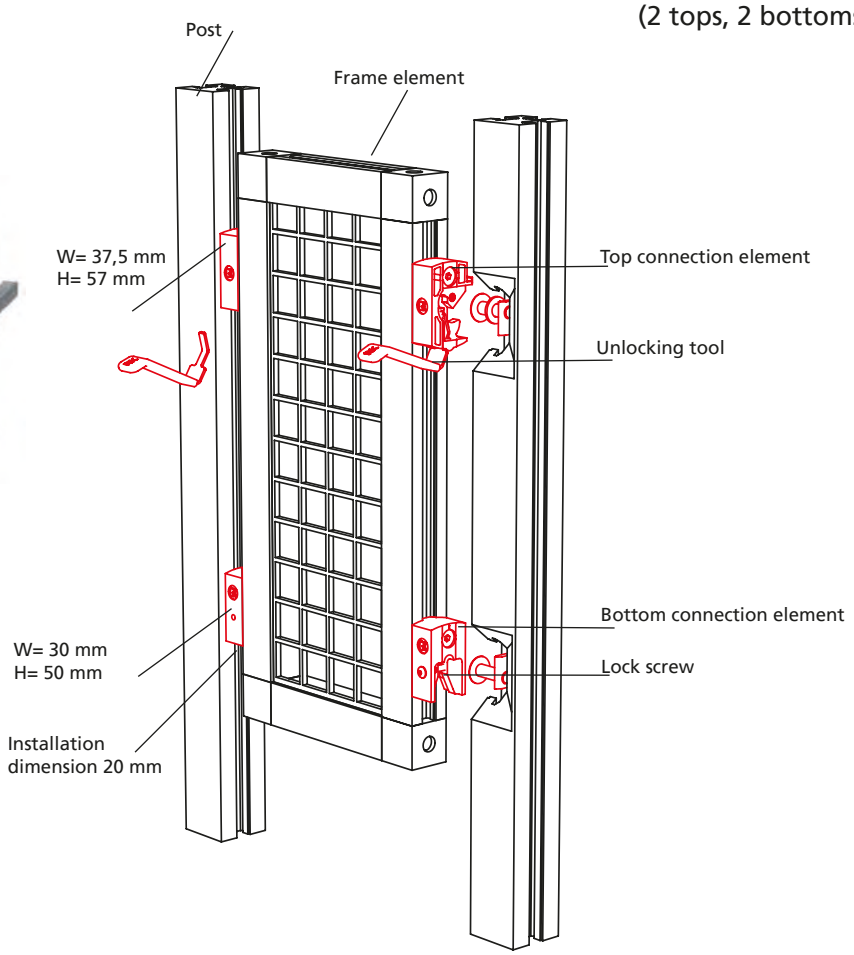

Code No.	Type	Slot geometry
4000657	Connection element 30	30
4010657	Connection element 40	40
4000658	Connection element 30-40	30 - 40
4016697	Unlocking tool, set of 2	

Assembly:

1. Insert frame into the lower holder.

2. Press frame into the holder at the top. The safety guard element automatically engages and locks.





A safety guard element is disassembled with a special unlocking tool according to the machinery directive.

Slot stones and screws

Versions



T-head bolt



Slot stone -F-



Slot stone -N-, -NF-



Slot stone -R-, -RF



Slot stone -L- II



Slot stone -E-, E-II



Slot stone -K-



Slot stone -P- version K



Slot stone -PA-



Equipotential bonding cable

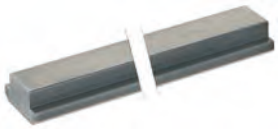

Bar material
slot stone -N-

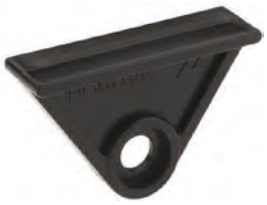

Suspended sliding block



Screws

Table of contents

Accessories

Slot stones and screws

T-head bolt ..... p. 86

Slot stone -F- ..... p. 86

Slot stone -N-, -NF- ..... p. 87

Slot stone -R-, -RF- ..... p. 88

Slot stone -L-II ..... p. 89

Slot stone -E-/E-II ..... p. 89

Slot stone -K- ..... p. 90

Slot stone -P- version K (equipotential bonding) ..... p. 90

Slot stone -PA- (equipotential bonding) ..... p. 91

Equipotential bonding cable ..... p. 92

Bar material slot stone -N- ..... p. 92

Suspended sliding block ..... p. 94

Screws ..... p. 95

Slot stones and screws

Order instruction:

- Purchase only in lot sizes and a multiple of that see product table below

- For fixing mitre joints and angle brackets
- Can be inserted into any position in the profile slot
- The action of tightening turns it into the final clamping position

Material: Galvanised steel
Includes: Complete with nut and washer

T-head bolt



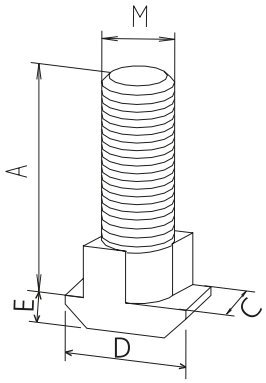

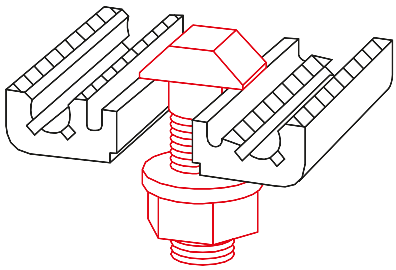

[mm]

Code No.	Type	lot sizes	Slot geometry	A	C	D	E	M
4016201	M8x25	10, 20, 30... pcs	40	25	9.8	15.5	4	M8

Slot stone -F-

- Simply slid/inserted edge-first into the profile slot
- Fixed in the desired position by the spring clip

Material: Galvanised steel



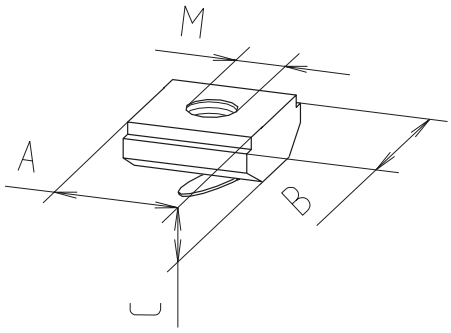

[mm]

Code No.	Type	lot sizes	Slot geometry	A	B	C	M
4006710	M3	10, 20, 30... pcs	30	10	12	4	M3
4006716	M4	10, 20, 30... pcs	30	10	12	4	M4
4006711	M5	10, 20, 30... pcs	30	10	12	4	M5
4006712	M6	10, 20, 30... pcs	30	10	12	4	M6
4006715	M4	10, 20, 30... pcs	40	10	14	4	M4
4006713	M5	10, 20, 30... pcs	40	10	14	4	M5
4006714	M6	10, 20, 30... pcs	40	10	14	4	M6

Slot stone -N-

- This slot stone slides into the end of the profile slot

Material: Galvanised steel



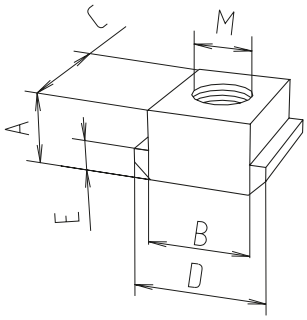

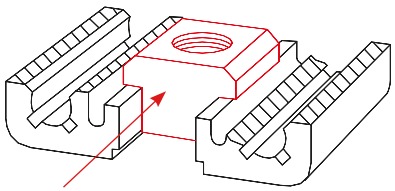

[mm]

Code No.	Type	lot sizes	Slot geometry	A	B	C	D	E	M
4006201	M5	10, 20, 30... pcs	30	5	10	13	13	3	M5
4006203	M6	10, 20, 30... pcs	30	5	10	13	13	3	M6
4006202	M8	10, 20, 30... pcs	30	5	10	13	13	3	M8
4026207	M5	10, 20, 30... pcs	40	8	10	13	15	4	M5
4026203	M6	10, 20, 30... pcs	40	8	10	13	15	4	M6
40092021	M8*	10, 20, 30... pcs	30	5	10	13	13	3	M8
4026206	M8	10, 20, 30... pcs	40	8	10	13	15	4	M8
4029206	M8*	10, 20, 30... pcs	40	8	10	13	15	4	M8
4026214	M8	10, 20, 30... pcs	40	8	10	28	15	4	M8
4026208	M8	10, 20, 30... pcs	40, with screw M8x16	8	10	13	15	4	M8
4026202	M8	10, 20, 30... pcs	40, with screw M8x18	8	10	13	15	4	M8

* Stainless steel

Slot stone -NF-

- This slot stone slides into the end of the profile slot
- The spring clip guarantees fixation in any position/installation position

Material: Galvanised steel



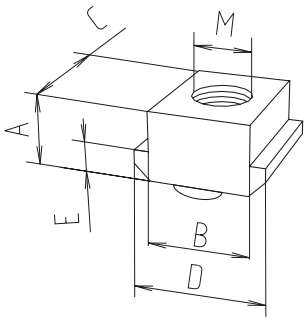

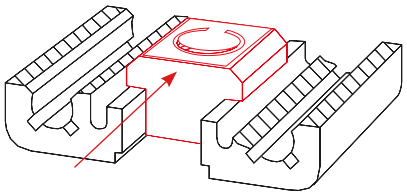

[mm]

Code No.	Type	lot sizes	Slot geometry	A	B	C	D	E	M
4016241	M5	10, 20, 30... pcs	40	8	10	13	15	4	M5
4016242	M6	10, 20, 30... pcs	40	8	10	13	15	4	M6
4016243	M8	10, 20, 30... pcs	40	8	10	13	15	4	M8

Slot stones and screws

Order instruction:

- Purchase only in lot sizes and a multiple of that see product table below

- Insert anywhere in the slot
- The action of tightening turns it into the final clamping position

Material: Galvanised steel

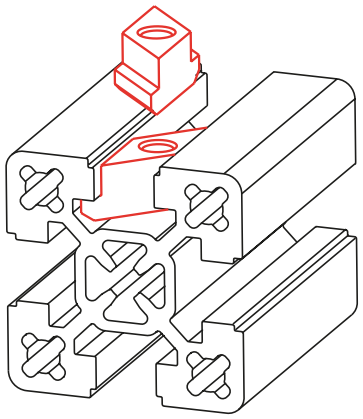

Slot stone -R-



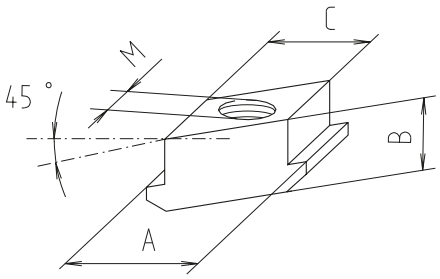

[mm]

Code No.	Type	lot sizes	Slot geom.	A	B	C	M
4006222	M5	10, 20, 30... pcs	30	13	5	10	M5
4006221	M6	10, 20, 30... pcs	30	13	5	10	M6
4006223	M8	10, 20, 30... pcs	30	13	5	10	M8
4026221	M6	10, 20, 30... pcs	40	15	8	10	M6
4026222	M8	10, 20, 30... pcs	40	15	9	10	M8

Slot stone -RF-

- Rhombic slot stones -RF- can be inserted and twisted into any position in the profile slot
- The spring clip guarantees fixation in any position/installation position

Material: Galvanised steel

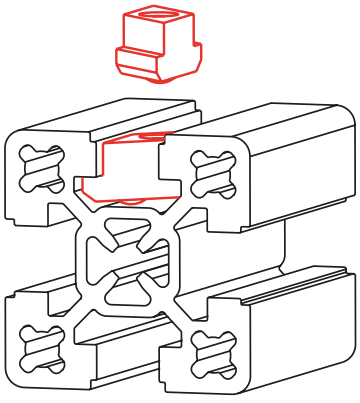



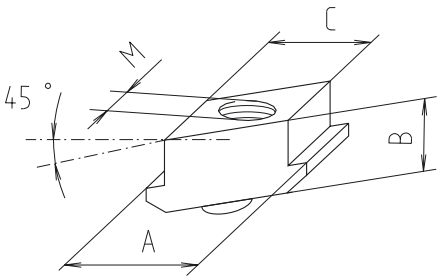

[mm]

Code No.	Type	lot sizes	Slot geom.	A	B	C	M
4006241	M5	10, 20, 30... pcs	30	13	5	10	M5
4006242	M6	10, 20, 30... pcs	30	13	5	10	M6
4006243	M8	10, 20, 30... pcs	30	13	5	10	M8
4016245	M8	10, 20, 30... pcs	40	15	9	10	M8
4016244	M6	10, 20, 30... pcs	40	15	8	10	M6

Slot stone -L- II



Version -L- II

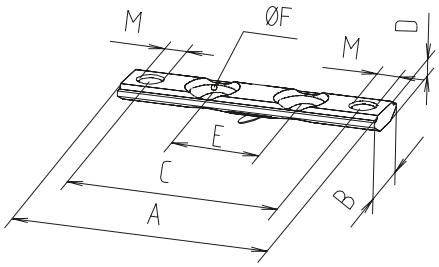

- For fixing flange brackets. The slot stone can be slid/inserted edge-first into the profile slot and fixed in any position with a spring clip.

Material: Galvanised steel

[mm]

Code No.	Type	Version	lot sizes	Slot geom.	A	B	C	D	E	F	M
4006207	M5	-L- II	10, 20, 30... pcs	30	29	12	21.5	4	0*	8.5	M5
4016206	M6	-L- II	10, 20, 30... pcs	40	38	14	28	4	0*	10.2	M6
4016207	M6	-L- II	10, 20, 30... pcs	40	48	14	38	4	15.5	10.2	M6
4016208	M6	-L- II	10, 20, 30... pcs	40	58	14	48	4	20	10.2	M6
4046206	M6	-L- II	10, 20, 30... pcs	40	78	14	68	4	40	10.2	M6

* Only have one hole

Slot stone -E- / E-II



Version -E-



Version -E- II



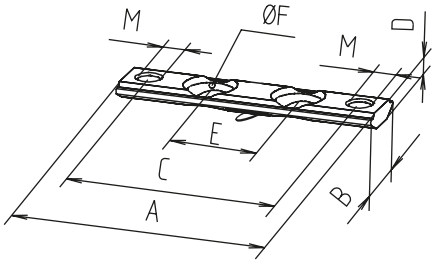

- Slid into the slot from the side
- High load capacity due to large supporting surface
- Fixed in the desired position by the spring clip

Material: Galvanised steel

[mm]

Code No.	Type	Version	lot sizes	Slot geom.	A	B	C	D	E	F	M
4006208	M5	-E-	10, 20, 30... pcs	40	10	16.5	–	4	0*	–	M5
4006209	M6	-E-	10, 20, 30... pcs	40	10	16.5	–	4	0*	–	M6
4006224	M6	-E- II	10, 20, 30... pcs	40	38	16.5	28	3.8	20	10.2	M6
4006239	M6	-E- II	10, 20, 30... pcs	40	58	16.5	48	3.8	20	10.2	M6
4006240	M6	-E- II	10, 20, 30... pcs	40	78	16.5	68	3.8	40	10.2	M6

* Only have one hole

Slot stones and screws

Order instruction:

- Purchase only in lot sizes and a multiple of that see product table below

- Simply slid/inserted edge-first into the profile slot

Material: Galvanised steel

Slot stone -K-



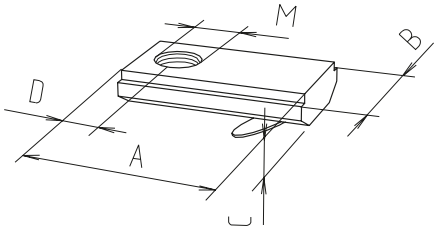

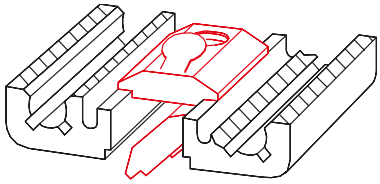

[mm]

Code No.	Type	lot sizes	Slot geom.	A	B	C	D	M
4006211	M5	10, 20, 30... pcs	30	21	12	4	7	M5
4006212	M6	10, 20, 30... pcs	30	21	12	4	7	M6
4006213	M8	10, 20, 30... pcs	30	21	12	4	7	M8
4016212	M6	10, 20, 30... pcs	40	21	14	4	7	M6
4016213	M8	10, 20, 30... pcs	40	21	14	4	7	M8

Slot stone -P- version K



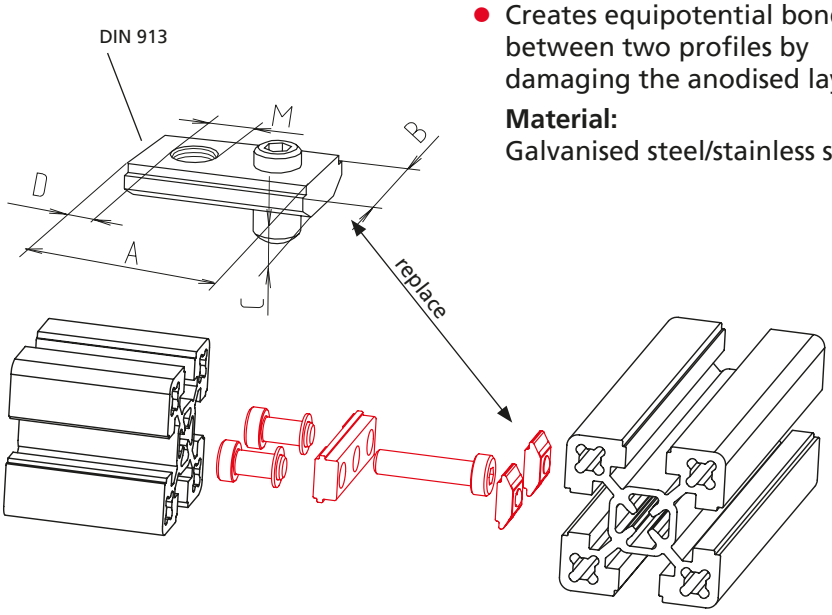

- Creates equipotential bonding between two profiles by damaging the anodised layer

Material:
Galvanised steel/stainless steel

[mm]

Code No.	Type	lot sizes	Material	Slot geom.	A	B	C	D	M
4006214	M5	10, 20, 30... pcs	Galvanised steel	All	20	12	4	7	M5
4009214	M5	10, 20, 30... pcs	Stainless steel	All	20	12	4	7	M5
4006216	M6	10, 20, 30... pcs	Galvanised steel	All	20	12	4	7	M6
4009216	M6	10, 20, 30... pcs	Stainless steel	All	20	12	4	7	M6
4006215	M6	10, 20, 30... pcs	Galvanised steel	40	20	14	4	7	M6

Slot stone -PA-

- The -PA- slot stones have an equipotential bonding effect by destroying the anodised layer. The slot stones can be used in an assembly kit or be interconnected with bridge pieces.

Material: Black galvanised steel



Version PA -N-



Version PA -R-



Version PA -F-



Version PA -K-



Version PA -L-

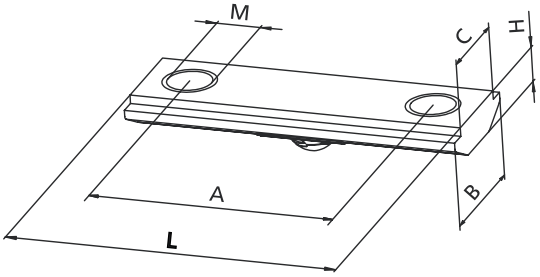

[mm]

Code No.	Type	lot sizes	Slot geom.	A	B	C	H	L	M
Slot stone PA -N-									
4006E01	M5	10, 20, 30... pcs	30	–	13	10	5	13	M5
4006E03	M6	10, 20, 30... pcs	30	–	13	10	5	13	M6
4006E02	M8	10, 20, 30... pcs	30	–	13	10	5	13	M8
4026E07	M5	10, 20, 30... pcs	40	–	15	10	8	13	M5
4026E03	M6	10, 20, 30... pcs	40	–	15	10	8	13	M6
4026E06	M8	10, 20, 30... pcs	40	–	15	10	8	13	M8
Slot stone PA -R-									
4006E22	M5	10, 20, 30... pcs	30	–	13	10	5	29	M5
4006E21	M6	10, 20, 30... pcs	30	–	13	10	5	29	M6
4006E23	M8	10, 20, 30... pcs	30	–	13	10	5	29	M8
4026E21	M6	10, 20, 30... pcs	40	–	15	10	8	31	M6
4026E22	M8	10, 20, 30... pcs	40	–	15	10	9	31	M8
Slot stone PA -F-									
4006E10	M3	10, 20, 30... pcs	30	–	12	10	4	10	M3
4006E16	M4	10, 20, 30... pcs	30	–	12	10	4	10	M4
4006E11	M5	10, 20, 30... pcs	30	–	12	10	4	10	M5
4006E12	M6	10, 20, 30... pcs	30	–	12	10	4	10	M6
4006E15	M4	10, 20, 30... pcs	40	–	14	10	4	10	M4
4006E13	M5	10, 20, 30... pcs	40	–	14	10	4	10	M5
4006E14	M6	10, 20, 30... pcs	40	–	14	10	4	10	M6
Slot stone PA -K-									
4006F11	M5	10, 20, 30... pcs	30	–	12	10	4	21	M5
4006F12	M6	10, 20, 30... pcs	30	–	12	10	4	21	M6
4006F13	M8	10, 20, 30... pcs	30	–	12	10	4	21	M8
4016E12	M6	10, 20, 30... pcs	40	–	14	10	4	21	M6
4016E13	M8	10, 20, 30... pcs	40	–	14	10	4	21	M8
Slot stone PA -L-									
4006E04	M5	10, 20, 30... pcs	30	21.5	12	10	4	29	M5
4016E04	M6	10, 20, 30... pcs	40	28	14	10	4	38	M6
4026E04	M6	10, 20, 30... pcs	40	48	14	10	4	58	M6
4046E04	M6	10, 20, 30... pcs	40	68	14	10	4	78	M6

Slot stones and screws

Equipotential bonding cable

- Equipotential bonding cable 6 mm² with cable lug, length 120 mm
- Fixing set Galvanised steel





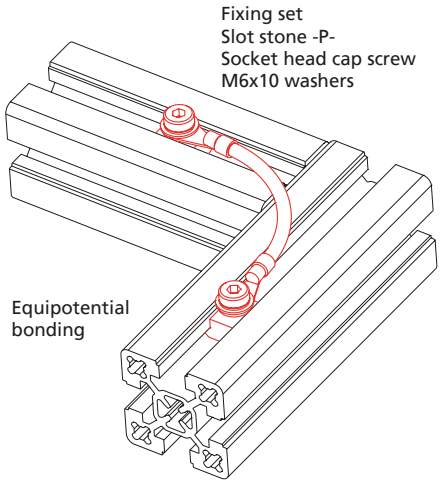

[mm]

Code No.	Type	Slot geometry
4012590	Equipotential bonding (cable)	40
4012591	Complete fixing set	40

Bar material

- The bar material allows thread to be cut to length and positioned to suit the application.
- Manufacturing tolerances (dimension C) must be observed
- Machining to customer specification available on request.

Material: steel / stainless steel
Base profile for slot stone -N-

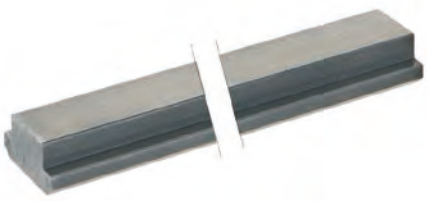

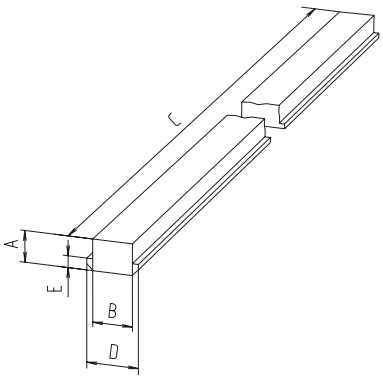

[mm]

Code No.	Material	Slot geometry	A	B	C	D	E
4006200 3010	Steel	30	5	10	2800 - 3000	13	3
4026200 3010		40	8	10	2800 - 3000	15	4
4009200 5600	Stainless steel	30	4	10	5600 - 6000	14	3
4029200 5600		40	8	10	5600 - 6000	15	4

Order instruction:

- Purchase only in lot sizes and a multiple of that see product table below

Use of slot stones (slot stone with spring clip -F- / slot stones -K-,-E- and -L- II)

Code No.	See page	lot sizes	30 slot geometry		40 slot geometry	
			slide into slot	insert edge-first into slot	slide into slot	insert edge-first into slot
Slot stone -F-						
4006710	86	10, 20, 30... pcs	x	x	x	x
4006716	86	10, 20, 30... pcs	x	x	x	x
4006711	86	10, 20, 30... pcs	x	x	x	x
4006712	86	10, 20, 30... pcs	x	x	x	x
4006715	86	10, 20, 30... pcs	x		x	x
4006713	86	10, 20, 30... pcs	x		x	x
4006714	86	10, 20, 30... pcs	x		x	x
Slot stone -L- II						
4006207	89	10, 20, 30... pcs	x	x	x	x
4016206	89	10, 20, 30... pcs	x		x	x
4016207	89	10, 20, 30... pcs	x		x	x
4016208	89	10, 20, 30... pcs	x		x	x
4046206	89	10, 20, 30... pcs	x		x	x
Slot stone -E- / E-II						
4006208	89	10, 20, 30... pcs			x	
4006209	89	10, 20, 30... pcs			x	
4006224	89	10, 20, 30... pcs			x	
4006239	89	10, 20, 30... pcs			x	
4006240	89	10, 20, 30... pcs			x	
Slot stone -K-						
4006211	90	10, 20, 30... pcs	x	x	x	x
4006212	90	10, 20, 30... pcs	x	x	x	x
4006213	90	10, 20, 30... pcs	x	x	x	x
4016212	90	10, 20, 30... pcs	x		x	x
4016213	90	10, 20, 30... pcs	x		x	x
4006214	90	10, 20, 30... pcs	x	x	x	x
4006215	90	10, 20, 30... pcs	x	x	x	x
4006216	90	10, 20, 30... pcs	x		x	x

Slide slot stone into slot

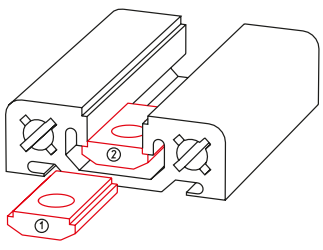

Numbers = Installation sequence

Insert slot stone edge-first into slot

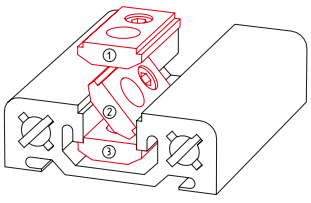

Example of retrospective insertion of an N slot stone in a profile.
You will find a suitable drilling fixture on page 484

Hole
Diameter: 20 mm
Depth: 11.5 mm

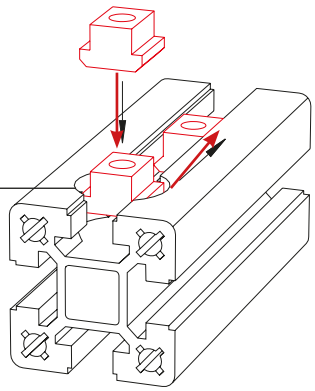

Slot stones and screws

Suspended sliding block

- To take tools and curtain guards
- Slid into the profile slot from the side.

Material: Black plastic



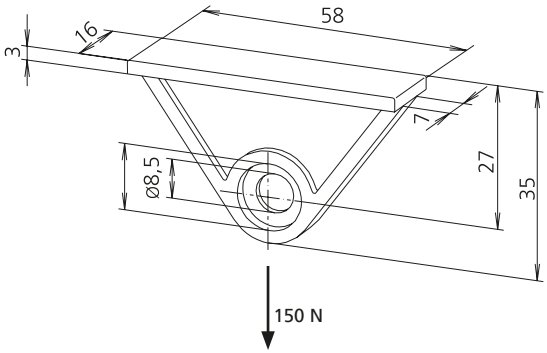

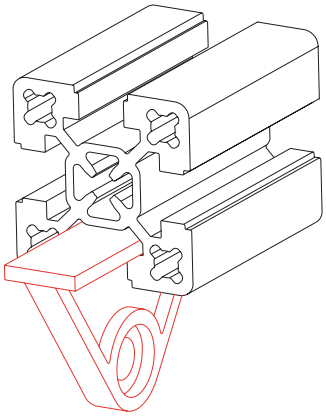

Code No.	Slot geometry
4018200	40

Order instruction:

- Purchase only in lot sizes and a multiple of that see product table below

Material: Galvanised steel
Includes: 1 unit complete with lock washer

Screws - DIN 7984



Code No.	Type	lot sizes	Suitable for
4006234	M5x14	100, 200, 300... pcs	Connecting plate 30
4006235	M5x16	100, 200, 300... pcs	Hidden screw 30
4006238	M5x35	100, 200, 300... pcs	Corner joint clamping profiles 30
4016234	M6x16	100, 200, 300... pcs	Connecting plates as of size 40
4016235	M6x20	100, 200, 300... pcs	Hidden screw size 40
4016240	M6x45	100, 200, 300... pcs	Corner joint clamping profiles 40
4016236	M8x12	100, 200, 300... pcs	Universal
4016238	M8x18	100, 200, 300... pcs	Universal
4016237	M8x30	100, 200, 300... pcs	Universal

RK expansion screws

- Used for low dynamic loads
- Tightening torque 10 Nm

Material: Galvanised steel
Head to DIN 7984



Code No.	Type	lot sizes	Suitable for
4126230	M6x35	10, 20, 30... pcs	40x40 to 80x160 F-profiles

Profile covers

Versions



Cap



End plate



Cover profile -plastic-



Cover profile -aluminium-



Rim



Door gap seal

Table of contents

Profile covers

Cap ..... p. 98

End plate ..... p. 100

Cover profile -plastic- ..... p. 101

Cover profile -aluminium- ..... p. 101

Rim ..... p. 102

Door gap seal ..... p. 102

Profile covers

Order instruction:

- Purchase only in lot sizes and a multiple of that see product table below

- In addition to the standard black version (see next page), it is possible to order other types in various RAL colours. Other profile types and RAL colours available on request.

Caps
-plastic-



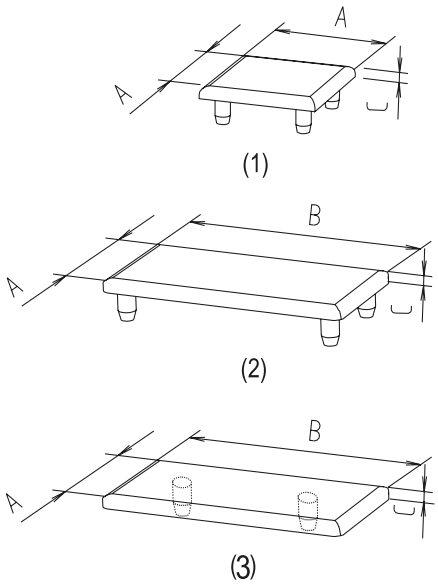

White RAL 9006
Grey RAL 7035
Yellow RAL 1021
Red RAL 3020
Blue RAL 5005

[mm]

Code No.	Type	lot sizes	See figure	A	B	C	D	R
Colour plastic cap								
400042_	30x30	10, 20, 30... pcs	1	30	–	3	–	–
430842_	F-30x60	10, 20, 30... pcs	2	30	60	4	–	–
401042_	40x40, F-40x40-L	10, 20, 30... pcs	1	40	–	4	–	–
403042_	40x80, F-40x80-L, F-40x80/3	10, 20, 30... pcs	2	40	80	4	–	–
408842_	F-50x50, F-50x50-L	10, 20, 30... pcs	1	50	–	4	–	–
412142_	60x60, F-60x60-L, F-60x60/1	10, 20, 30... pcs	1	60	–	4	–	–
404042_	80x80, F-80x80-L, F-80x80/2, F-80x80/2-L	10, 20, 30... pcs	1	80	–	4	–	–

404042_
2 = RAL 9006
3 = RAL 7035
4 = RAL 1021
5 = RAL 3020
6 = RAL 5005

Black caps
-plastic-



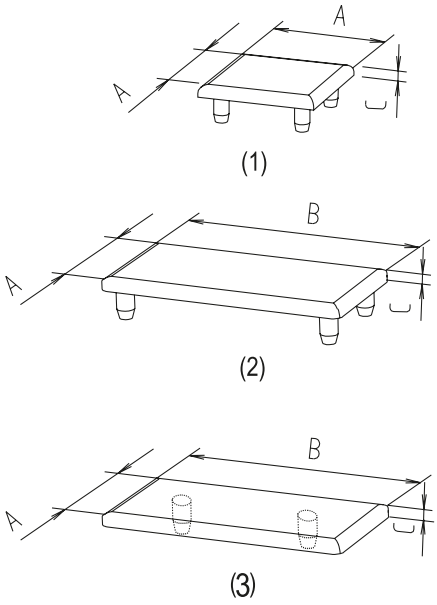

Black RAL 9005

[mm]

Code No.	Type	lot sizes	See figure	A	B	C	D	R
Black plastic cap								
4000421	30x30	10, 20, 30... pcs	1	30	–	3	–	–
4308421	F-30x60	10, 20, 30... pcs	2	30	60	4	–	–
4318421	F-30x80	10, 20, 30... pcs	2	30	80	4	–	–
4298421	F-30x100	10, 20, 30... pcs	2	30	100	4	–	–
4328421	F-30x120	10, 20, 30... pcs	2	30	120	4	–	–
4338421	F-30x160	10, 20, 30... pcs	2	30	160	4	–	–
4010421	F-40x40-L, 40x40	10, 20, 30... pcs	1	40	–	4	–	–
4030421	40x80, F-40x80-L, F-40x80/3	10, 20, 30... pcs	2	40	80	4	–	–
4648421	F-40x120	10, 20, 30... pcs	2	40	120	4	–	–
4658421	F-40x160	10, 20, 30... pcs	2	40	160	4	–	–
4088421	F-50x50, F-50x50-L	10, 20, 30... pcs	1	50	–	4	–	–
4668421	F-50x100	10, 20, 30... pcs	2	50	100	4	–	–
4678421	F-50x200	10, 20, 30... pcs	2	50	200	4	–	–
4121421	60x60, F-60x60/1, F-60x60-L	10, 20, 30... pcs	1	60	–	4	–	–
4068421	F-60x120	10, 20, 30... pcs	2	60	–	4	–	–
4040421	80x80, F-80x80-L, F-80x80/2, F-80x80/2-L	10, 20, 30... pcs	1	80	–	4	–	–
4688421	F-80x120	10, 20, 30... pcs	2	80	120	4	–	–
4078421	F-80x160, F-80x160-L	10, 20, 30... pcs	2	80	–	4	–	–
4698421	F-100x100	10, 20, 30... pcs	1	100	–	4	–	–
4168421	F-120x120	10, 20, 30... pcs	1	120	–	4	–	–

Profile covers

End plate

Includes: End plate complete with fixing set



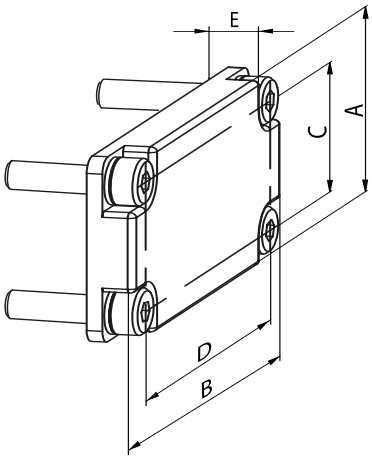

[mm]

Code No.	Type	A	B	C	D	E
End plate connection - face to slot						
Die-cast aluminium						
4034451	F-40x80, F-40x80-L, F-40x80/3	40	80	68	68	8
4084401	F-50x50, F-50x50-L	50	50	38	38	7
4224401	60x60, F-60x60/1, F-60x60-L	60	60	43	43	7
Aluminium						
4304401	F-30x60	30	60	–	20	15
4314401	F-30x80	30	80	–	40	15
4294401	F-30x100	30	100	–	65,5	15
4324401	F-30x120	30	120	–	80	15
4334401	F-30x160	30	160	–	120	15
4644401	F-40x120	40	120	–	80	15
4654401	F-40x160	40	160	–	120	15
4664401	F-50x100	50	100	–	65,5	15
4674401	F-50x200	50	200	–	165.5	15
4064401	F-60x120	60	120	48	108	15
4044401	80x80, F-80x80-L, F-80x80/2, F-80x80/2-L,	80	80	68	68	8
4684401	F-80x120	80	120	40	80	15
4074401	F-80x160	80	160	68	148	15
4694401	F-100x100	100	100	50	65,5	15
4164401	F-120x120	120	120	80	80	15

Cover profile -plastic-

- For the flush covering of longitudinal slots. Two versions are available.

- Due to the geometry of type 1, it is possible to route leads in the slot. Type 2, on the other hand, is easier to take out of the profile slot (without leaving residues).

Type 1

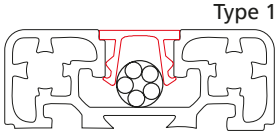

Type 2

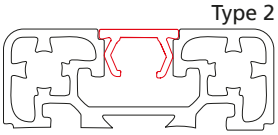

Material: Plastic
Please note that, for typographical reasons, the colour illustrated here is only an approximation of the RAL colour.
Further special colours available on request.

- Black RAL 9005
- White RAL 9006
- Grey RAL 7035
- Yellow RAL 1021
- Red RAL 3020
- Blue RAL 5005



[mm]

Code No.	Type	Version	Colour	A	B	C
4000570	2	2 m bar	Black	12	11.2	6.4
4000575	2	2 m bar	Grey	12	11.2	6.4
4000577	2	2 m bar	White	12	11.2	6.4
4000579	2	2 m bar	Yellow	12	11.2	6.4
4000581	2	2 m bar	Red	12	11.2	6.4
4000583	2	2 m bar	Blue	12	11.2	6.4
4008570	1	2 m bar	Black	12	11.2	6.4
4000585	1	2 m bar	Yellow	12	11.2	6.4
4000586	1	2 m bar	Transparent	12	11.2	6.4

Cover profile -aluminium-

Material: Aluminium



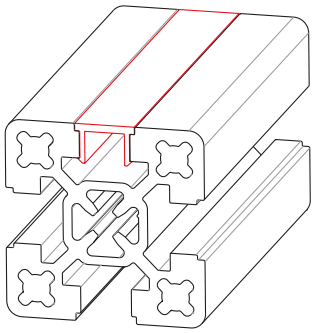

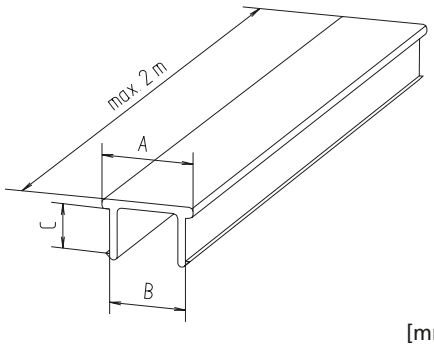

[mm]

Code No.	Type	Slot geometry	A	B	C
4005572	Cut to size	30	12	10	2.7
4005570	1	30	12	10	2.7
4015572	Cut to size	40	12	10	5.2
4015570	1	40	12	10	5.2

Profile covers

Rim

- Protects the structure from damage
- Simply pressed into the profile slot

Material:
Synthetic EPDM rubber, black
Shore hardness: 70 Shore



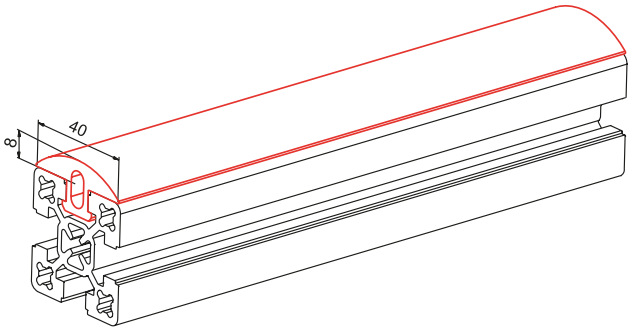

Code No.	Type	Slot geometry
4018594	Rim, 30 m roll	40
401859910000	Rim, 10 m roll	40

Door gap seal

- Can absorb gap width tolerances
- Acts as a door stop

Material: NBR rubber, black
Shore hardness: 55 Shore



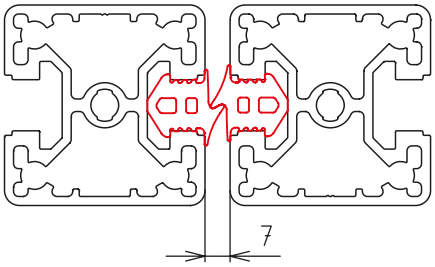

Code No.	Type	Slot geometry
401851810000	Door gap seal, 10 m roll	40
401851850000	Door gap seal, 50 m roll	40
4018518100000	Door gap seal, 100 m roll	40



Panels and accessories

Versions

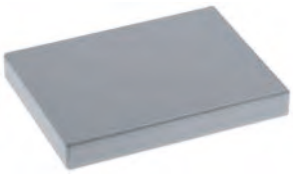

Panels



2-piece plastic framing profile



Corner piece

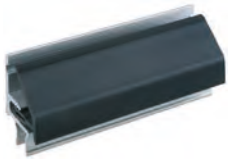

2-piece framing profile



Embedding U-profile



Frame profile
Corner joint



Profile seal



Block joint -L-



Block joint -G-



Block joint -K-



Vario-Quick
holding block R



Vario-Quick
holding block S



Vario-Quick
holding block L



Vario-Quick
holding block K/KK



Quick
cable bracket



Tube clamp



Sliding door profile

Table of contents

Panels and accessories

Panels ..... p. 106

2-piece plastic framing profile ..... p. 108

Corner piece ..... p. 108 + p. 110

2-piece framing profile ..... p. 110

Embedding U-profile ..... p. 111

Frame profile/corner joint ..... p. 112

Profile seals ..... p. 114

Block joint -L- ..... p. 116

Block joint -G- ..... p. 117

Block joint -K- ..... p. 117

Vario-Quick holding block R ..... p. 118

Vario-Quick holding block S ..... p. 118

Vario-Quick holding block L ..... p. 119

Vario-Quick holding block K/KK ..... p. 121

Vario-Quick cable bracket ..... p. 121

Tube clamp ..... p. 120

Sliding door profile ..... p. 122

Panels and accessories

Panels

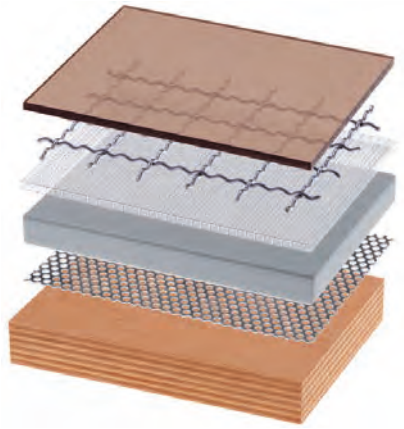

- For doors, cladding, safety and table tops. Cut to specification!

Code No.	Type	Thickness	Version	Max. size [mm]	Weight [kg/m²]
4018584	Makrolon	2 mm	Clear	3.050 x 2.050	2.40
4018586	Makrolon	4 mm	Clear	3.050 x 2.050	4.80
4018576	Makrolon	6 mm	Clear	3.050 x 2.050	8.00
4018579	Makrolon	6 mm	Brown tinted	3.050 x 2.050	8.00
4018578	Makrolon	10 mm	Clear	3.050 x 2.050	13.00
4018582	Acrylic glass	4 mm	Clear	3.050 x 2.050	4.80
4018595	Acrylic glass	5 mm	Clear	3.050 x 2.050	6.00
4018563	Acrylic glass	5 mm	Blue, transparent	3.050 x 2.030	6.00
4018575	Acrylic glass	6 mm	Clear	3.050 x 2.050	7.20
4018577	Acrylic glass	10 mm	Clear	3.050 x 2.050	13.00
4012576	Trespa	6 mm	Brown	2.050 x 2.130	8.40
4012586	Trespa	6 mm	Silver-grey	3.050 x 1.530	8.40
4012587	Trespa	10 mm	Silver-grey	3.050 x 1.530	13.00
4018570	Koematex	6 mm	White	3.050 x 2.030	4.20
4018571	Koematex	8 mm	White	3.050 x 2.030	5.60
4018572	Koematex	10 mm	White	3.050 x 2.030	6.00
4012579	Multiplex	30 mm	Untreated	2.500 x 1.500	27.00
4015573	Aluminium	2 mm	Clear anodised	2.000 x 1.000	5.40
4012582	Table top	19 mm	Grey plastic-coated, glued edges	2.000 x 2.075	14.70
4012577	Composite	6 mm	Clear anodised	3.050 x 1.500	7.30
4012511	MDF panel	6 mm	Untreated	2.000 x 2.075	5.00
4012512	MDF panel	8 mm	Untreated	2.000 x 2.075	6.60
4016576	Perforated plate	1 mm	Round holes in staggered rows, galvanised steel	1.000 x 2.000	4.30
4016577	Wire mesh 20x20	2.5 mm	Galvanised steel	2.000 x 1.000	2.40
4016578	Wire mesh 30x30	3 mm	Galvanised steel	2.000 x 3.000	3.70
4016579	Wire mesh 40x40	3.8 mm	Galvanised steel	2.000 x 3.000	4.70

Further versions available on request. For material descriptions, please see next page.



Makrolon
Unbreakable, impact-resistant, weather-resistant, good chemical resistance

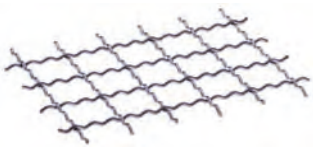

Wire mesh
Galvanised steel, cost-effective panel for safety devices



Acrylic glass
Highly transparent, low thickness tolerances, weather-resistant, unbreakable, easy to work with

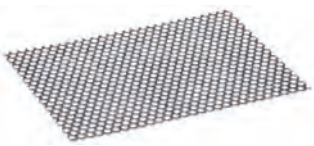

Perforated plate
Galvanised sheet steel, 5 mm round hole in staggered rows

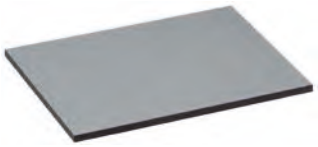

Trespa
Colourfast, weather-resistant, decorative, impact-, shock- and scratch-resistant, very easy to work with

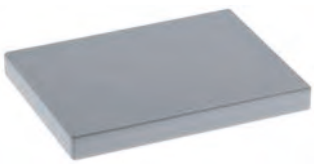

Table top
Decorative, plastic-coated, glued edges

Koematex
Flame-retardant, thermoformable, low static charging, very easy to work with



Composite
Low-weight, high flexural strength, weather-resistant, very good flatness and smooth surface



Multiplex panel
High load-bearing strength and flexural strength, easy to work with



MDF panel
Easy to work with, cost-effective

Panels and accessories

2-piece framing profile

- Used for retrofitting panels

Material: Black plastic. For a description of assembly, please see page 109
Profile cut length: Frame internal dimension -33 mm (if corner pieces are used)
Panel cut length:
Frame internal dimension -5.5 mm all-round



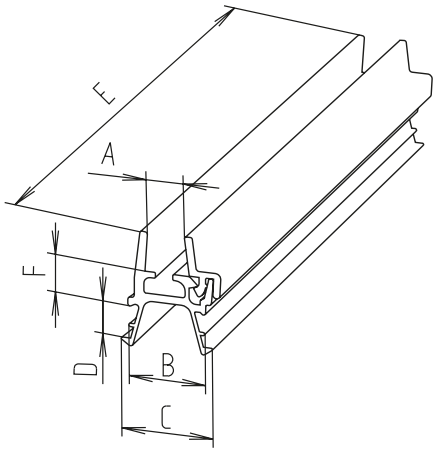

Note: Note there is another framing profile version on page 110.

[mm]

Code No.	Type	Slot geometry	A	B	C	D	E	F
4018556	Bar	30 + 40	4	11.8	14.2	5	2000	4
4018558	Bar	30 + 40	5	11.8	14.2	5	2000	4
4018560	Bar	30 + 40	6	11.8	14.2	5	2000	4

Order instruction:

- Purchase only in lot sizes and a multiple of that see product table below

Material: Black plastic

Assembly description:
See page 109

Corner piece



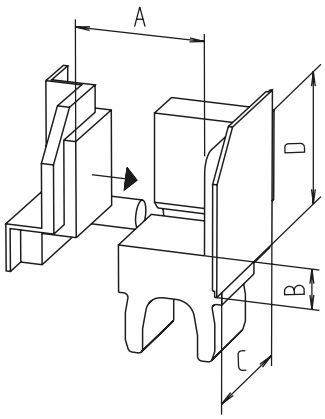

[mm]

Code No.	lot sizes	A	B	C	D
40185651	4, 8, 12... pcs	4 - 6	4	17	17

Assembly description:

1. Insert the corner piece base unit (1) into each corner.
2. Cut framing profile (2) and press it into the profile slots.
3. Insert panel (3) and fix with 2 corner piece covers (4) in diagonally opposite corners.
4. Press in the cover strip of the framing profiles.
5. Press in the remaining corner piece covers.

- All components can be undone if necessary, so that damaged panels or panes can be replaced without difficulty.

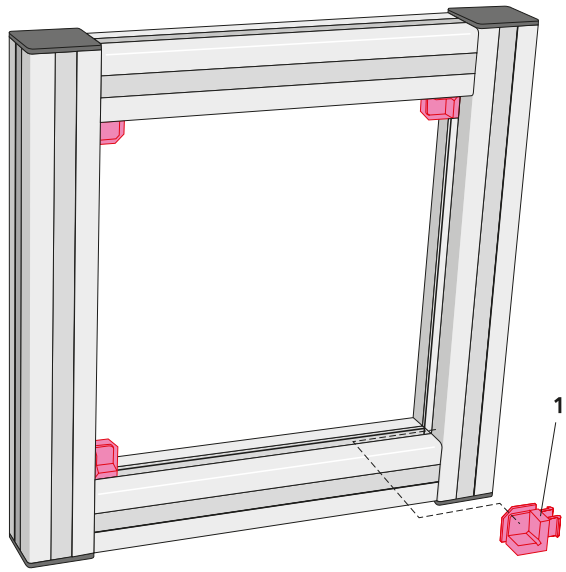

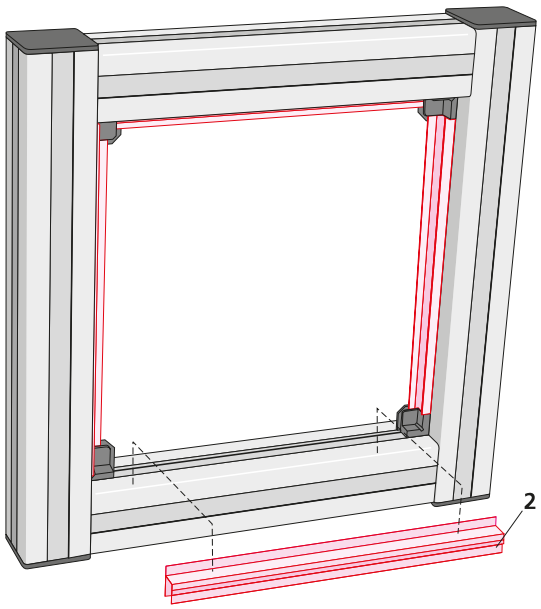

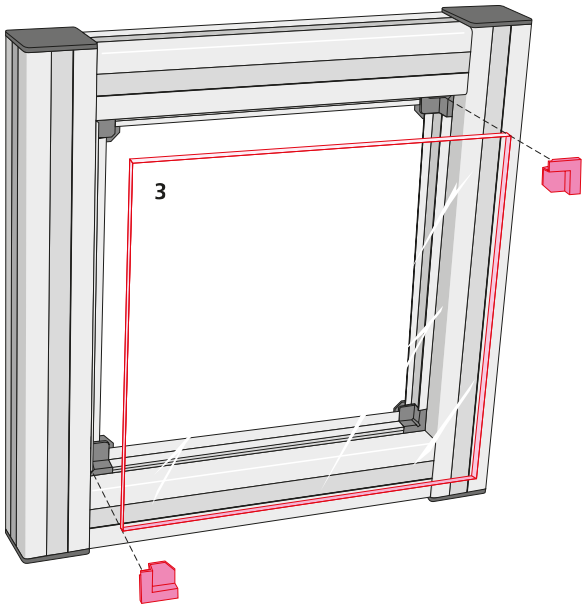

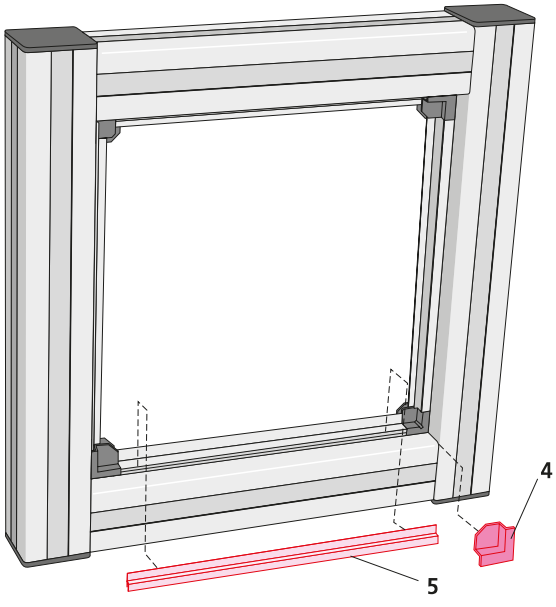

Panels and accessories

Order instruction:

- Purchase only in lot sizes and a multiple of that see product table below

- Used for retrofitting panels
- The aluminium bottom is designed to take panel thicknesses of 4, 6, 8 or 10 mm. A plastic top serves as a sealing strip and protects against dust and splashes.

Material: Aluminium profile bottom, black plastic profile top (with soft PVC on the sealing strips)
Profile cut length:
Frame internal dimension -56 mm (if corner pieces are used)
Panel cut length:
Frame internal dimension -11.5 mm all-round
Assembly description:
See page 109

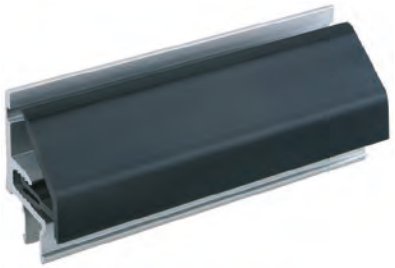

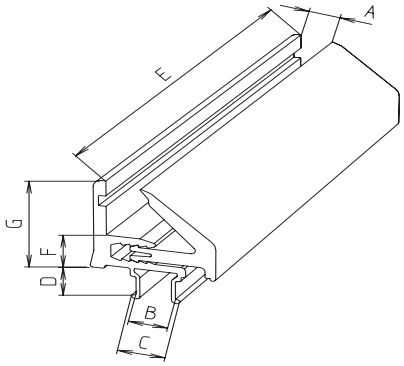

[mm]

Code No.	Type	Slot geometry	A	B	C	D	E_{Max}	F	G
4010571	Cut to size	40	4,6,8,10	9.2	11.4	6.8	2000	10	26
4010572	Bar	40	4,6,8,10	9.2	11.4	6.8	2000	10	26

Order instruction:

- Purchase only in lot sizes and a multiple of that see product table below

Material: Black plastic
Assembly description:
See page 109

Corner piece



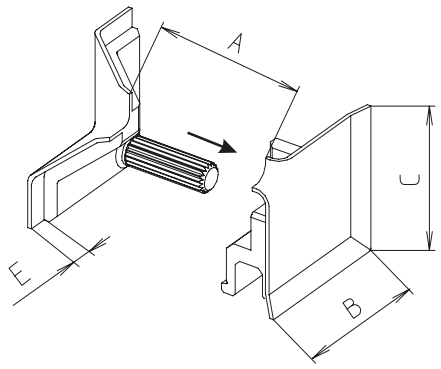

[mm]

Code No.	lot sizes	Slot geometry	A	B	C	E
40185661	4, 8, 12... pcs	40	4-10	31	31	5

Embedding U-profile

- Panels with a thickness of 6 mm can be embedded in the slots with the plastic profile
- The embedding U-profiles are slid into the slot before assembly

Material: Black plastic
Panel cut length:
Frame internal dimension +6 mm all-round.



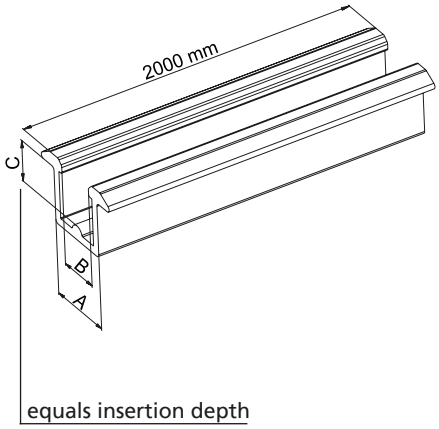

[mm]

Code No.	Type	Slot geometry	A	B	C
4010575	Bar	30 + 40	10	6	6

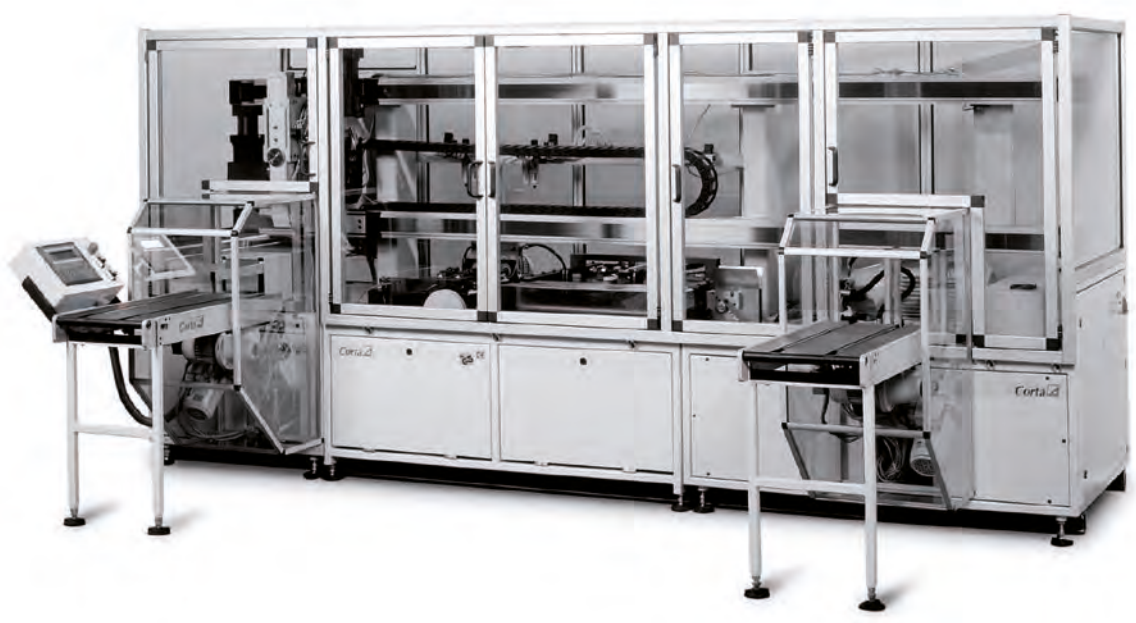

Panels and accessories

Frame profile

- Takes wire meshes (up to 30x30x3) and panels

Material: Aluminium
Panel cut length:
Frame internal dimension -7 mm with 30 slot geometry -10 mm, (page 26) all-round, for fixing in the slot.





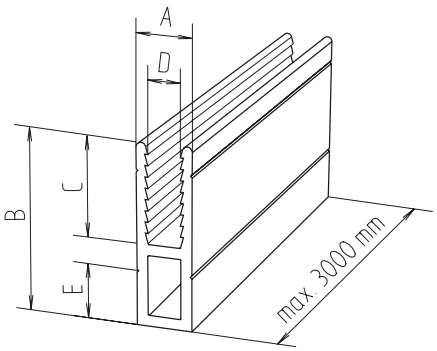

[mm]

Code No.	Type	A	B	C	D	E
4015562	Cut to size	10	33	18	5.8	10
4015560	3 m bar	10	33	18	5.8	10

Order instruction:

- Purchase only in lot sizes and a multiple of that see product table below

Frame corner joint

- Connection element for the frame profile

Material: Black plastic



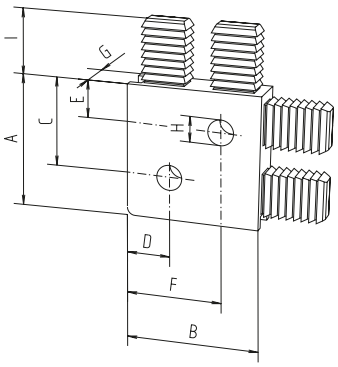

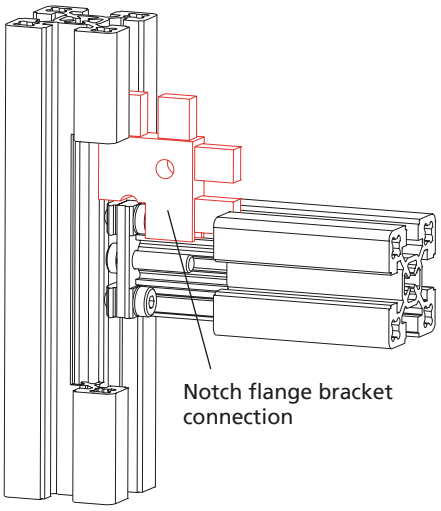

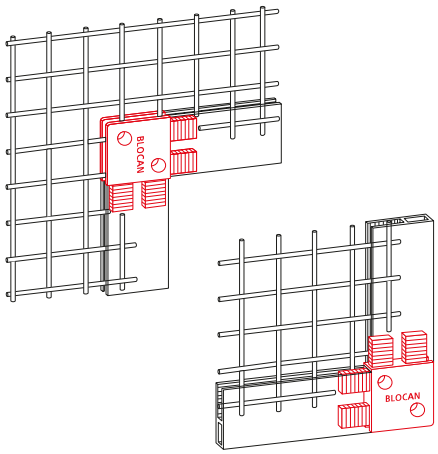

[mm]

Code No.	lot sizes	A	B	C	D	E	F	G	H	I
4010565	4, 8, 12... pcs	34	34	23	11	10	24	10	6.5	15
4000566	–	With notch for 30 slot geomtry (see diagram above)								
4010566	–	With notch for 40 slot geometry (see diagram above)								

Panels and accessories

Profile seal

Version for 2-sided sealing





Assembly: Ideally, the seal is first laid around the panel and then placed into the profile slot.
Material: SBR, 60 Sh, black
Panel cut length:
Frame internal dimension +6 mm all-round.

Code No.	Sealing	Slot geometry	Length
401851510000	2-sided	40	10 m
401851560000			60 m

Version for 1-sided or 2-sided sealing



Assembly: Insert the panel into the profile slot. Then press the profile seal into the slot by hand or using a blunt object.
Material: Black EPDM

Version (1)

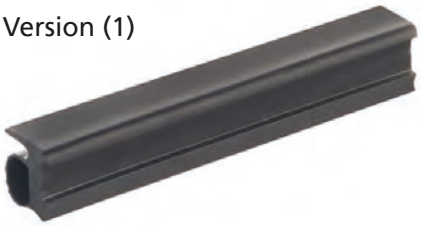

Version (2)



Code No.	See figure	Sealing	Slot geometry	Length
4018513010000	1	1-sided	40	10 m
4018513050000				50 m
4018513150000				150 m
401851410000	2	1-sided + 2-sided	40	10 m
401851450000				50 m
4018514100000				100 m

Profile seals for panel elements
Mounting options

Profile	Versions	Panel thickness [mm]						Seal	Exsample	Code No.
		10	6	5	4	3	2			
Slot geometry 40	without seal	X						-	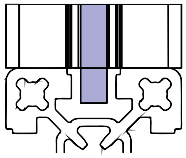	-
	Profile seal 2-sided for panel thickness 5 - 6 mm		X	X					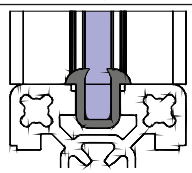	401851510000 401851560000
	(See figure 2) Profile seal 1-sided for panel thickness 4 - 6 mm		X	X	X				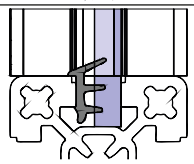	401851410000 401851450000 4018514100000
	(See figure 1) Profile seal 1-sided for panel thickness 2-4 mm				X	X	X		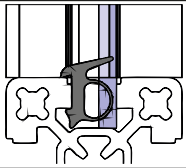	4018513010000 4018513050000 40185130100000
	(See figure 2) Profile seal 1-sided for panel thickness 2 mm mounted on both sides						X		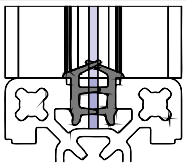	2 x 401851410000 2 x 401851450000 2 x 4018514100000

Panels and accessories

Block joint

- For fixing panels to profiles

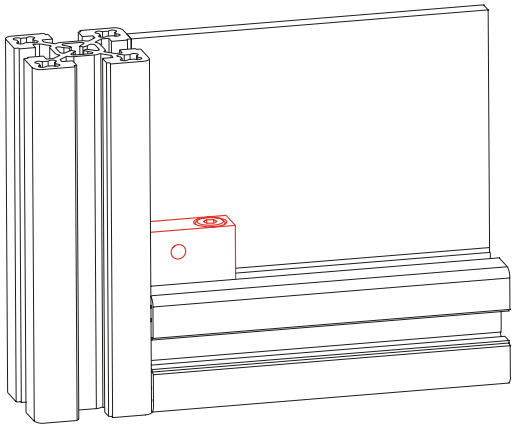



Order instruction:

- Purchase only in lot sizes and a multiple of that see product table below

Material:
Black plastic, galvanised steel parts

Includes:
Complete fixing set for profile assembly.

Block joint -L-



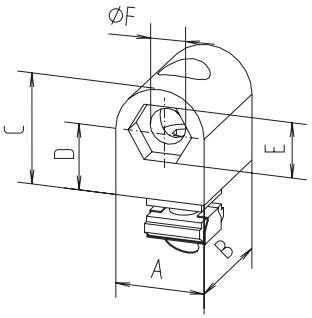

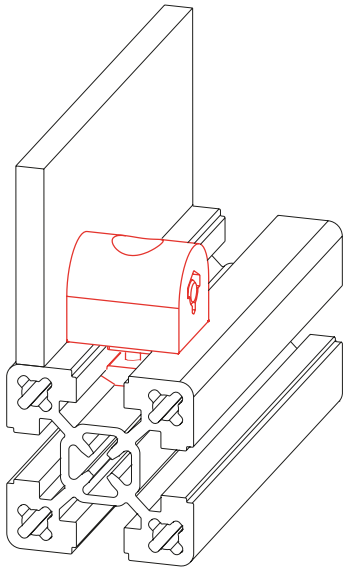

[mm]

Code No.	Type	lot sizes	Slot geometry	A	B	C	D	E	F
4008122	Block joint -L-	–	30	20	24	20	10	8	5.5
4018122	Block joint -L-	–	40	20	24	20	10	8	5.5
4004131	Fixing screw for panel	10, 20, 30... pcs	Wall thickness 2-8 mm	Socket head button screw M5x30 ISO 7380					

Block joint -G-

Material:
Vibration finished aluminium, galvanised steel parts

Includes:
Complete fixing set for profile assembly.



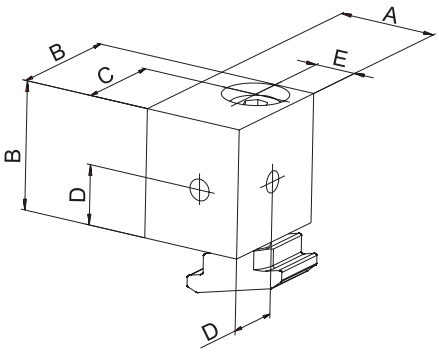

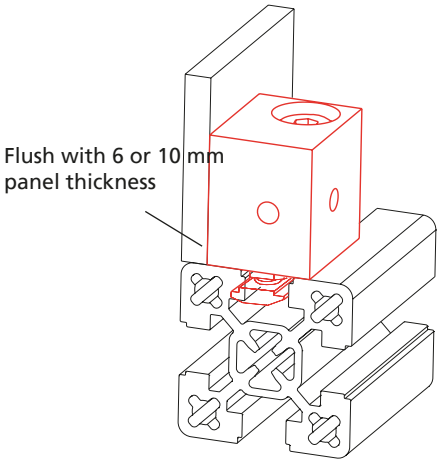

[mm]

Code No.	Type	Slot geometry	A	B	C	D	E
4015121	M6	40	24	30	22	14	10
4025122	M8	40	24	30	22	14	10
4085121	M6 for profile 50	40	34	30	22	14	15
4085122	M8 for profile 50	40	34	30	22	14	15

Block joint -K-

Material:
Vibration finished aluminium, galvanised steel parts

The insertion depth in the profile is 1.5 mm.

Includes:
Complete fixing set for profile assembly.



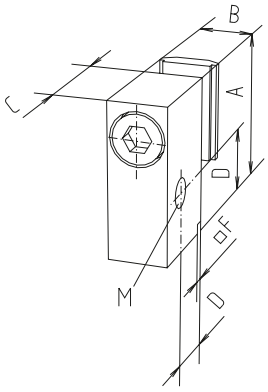

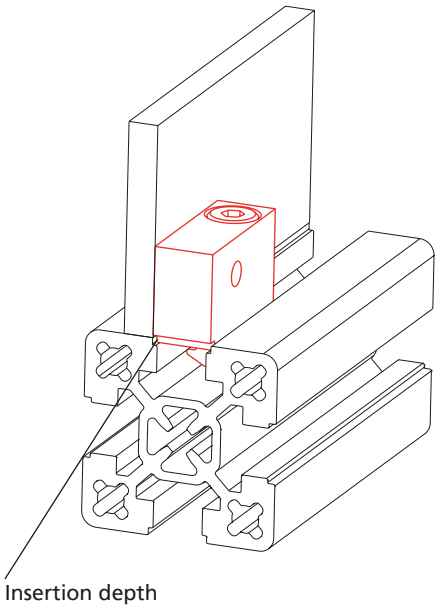

[mm]

Code No.	Type	Slot geometry	A	B	C	D	F	M
4005123	M6	30	32	12	20	12.5	2	M6
4015123	M6	40	32	12	20	12.5	2	M6

Panels and accessories

Order instruction:

- Purchase only in lot sizes and a multiple of that see product table below

Vario-Quick holding block R



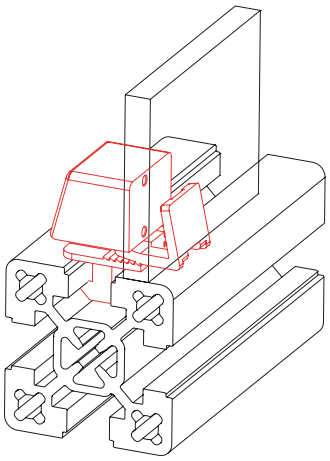

- For retrofitting a wide variety of panels without screws in an existing profile structure
- Fixation by means of toothed snap-in clips. Spacers allow for different distances from the profile edge

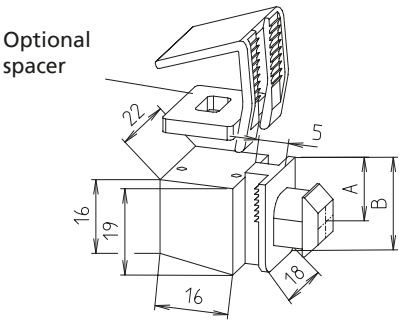

Clamping range for panels: 1-10 mm.
Panel cut length:
Frame internal dimension -6 mm all-round.
Material: Black plastic

[mm]

Code No.	Type	lot sizes	Version	A	B
40081231	Holding block R	10, 20, 30... pcs	30 slot geometry	5.5	20
40181231	Holding block R	10, 20, 30... pcs	40 slot geometry	8.5	20
40081321	Spacer R	10, 20, 30... pcs	2 mm	–	–
40081331	Spacer R	10, 20, 30... pcs	3 mm	–	–
40081351	Spacer R	10, 20, 30... pcs	5 mm	–	–

Vario-Quick holding block S



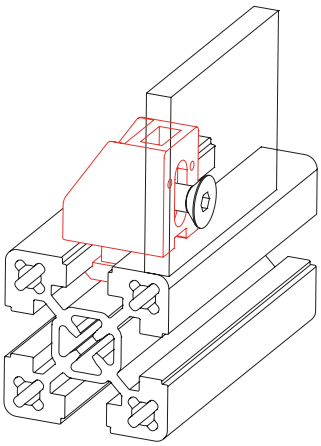

- For retrofitting a wide variety of panels in an existing profile structure
- The panel is screwed to the holding block.
- Spacers allow for different distances from the profile edge

Material: Black plastic, galvanised nut

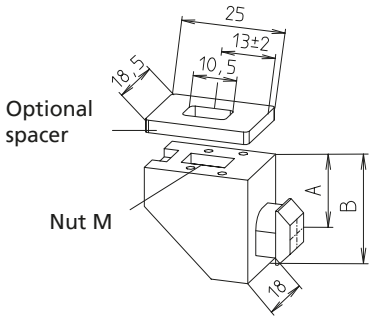

[mm]

Code No.	Type	lot sizes	Version	A	B	M
40081641	Holding block S	10, 20, 30... pcs	30 slot geometry	5	18	M4
40181641	Holding block S	10, 20, 30... pcs	40 slot geometry	10	25	M4
40081241	Holding block S	10, 20, 30... pcs	30 slot geometry	5	18	M6
40181241	Holding block S	10, 20, 30... pcs	40 slot geometry	10	25	M6
40181321	Spacer S/L	10, 20, 30... pcs	2 mm	–	–	–
40181331	Spacer S/L	10, 20, 30... pcs	3 mm	–	-	–
40181351	Spacer S/L	10, 20, 30... pcs	5 mm	–	–	–

Vario-Quick holding block L



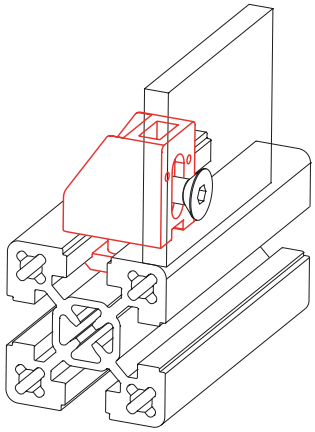

- For fixing various panels in an profile structure.
- The panel is screwed to the holding block.

Optional spacer

M6 nut

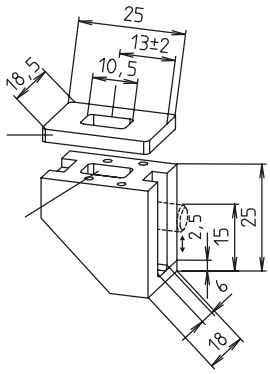

- One fixing set connects one profile. The slot allows different panel thicknesses to be fixed without spacers.

Material: Black plastic, galvanised nut
Includes:
The Order No. includes one complete fixing set (socket head cap screw, slot stone -F-) for mounting on profile

[mm]

Code No.	Type	lot sizes	Version
40081261	Holding block L	10, 20, 30... pcs	30 slot geometry
40181261	Holding block L	10, 20, 30... pcs	40 slot geometry
40181321	Spacer S/L	10, 20, 30... pcs	2 mm
40181331	Spacer S/L	10, 20, 30... pcs	3 mm
40181351	Spacer S/L	10, 20, 30... pcs	5 mm

Application examples:

- **Vario-Quick holding block R/S**
  Profile 40 combined with panel thickness 4 and 10 mm. Compensation using spacers (choice of 2, 3 or 5 mm)

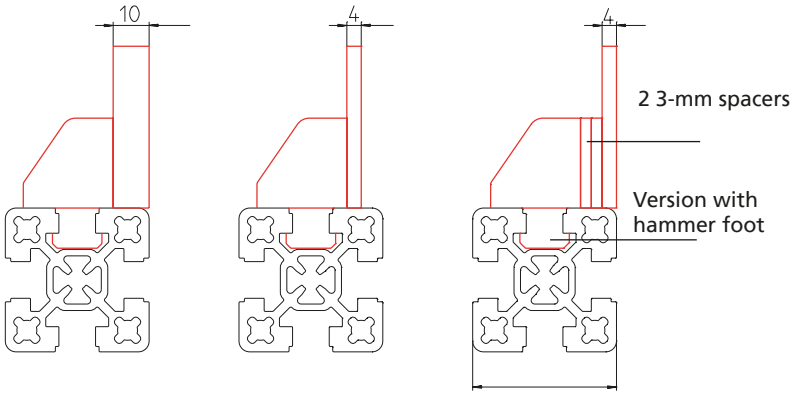

- **Vario-Quick holding block L:**
  Profile 40 combined with panel thickness 4 and 6 mm. Compensation using slot – if necessary, using spacers (choice of 2, 3 or 5 mm)

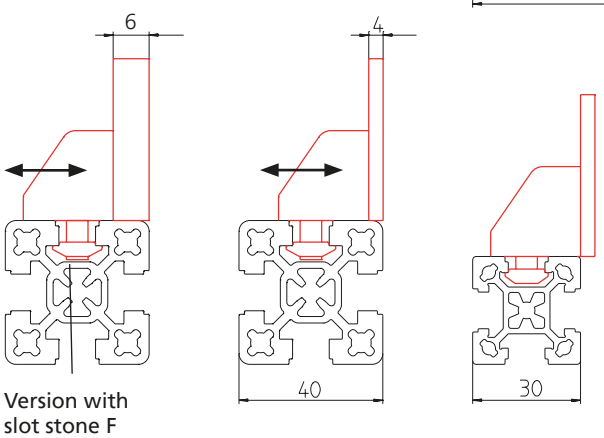

Panels and accessories

Order instruction:

- Purchase only in lot sizes and a multiple of that see product table below

- For fixing cables and hoses
- It is possible to insert it into the profile slot retrospectively

Material: Black plastic

Vario-Quick holding block K/KK

Type K



Type KK



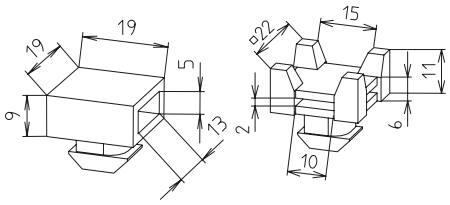

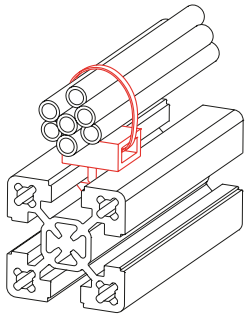

Code No.	Type	lot sizes	Version
40081251	Holding block K	10, 20, 30... pcs	30 slot geometry
40181251	Holding block K	10, 20, 30... pcs	40 slot geometry
40181271	Holding block KK	10, 20, 30... pcs	40 slot geometry

Tube clamp

For fixing tubes, hoses and cables

Material: Stainless steel, galvanised fixing set



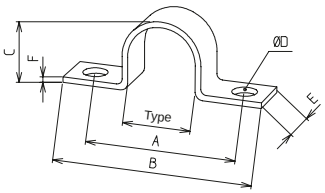

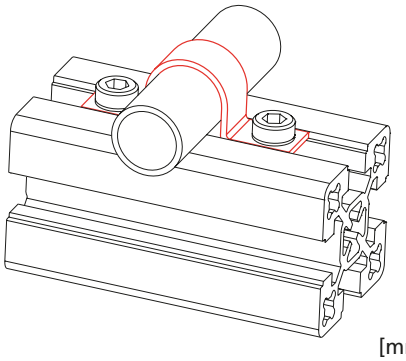

[mm]

Code No.	Type	lot sizes	A	B	C	D	E	F
40105401	Ø6	10, 20, 30... pcs	28	41.5	6.8	6.5	12	1
40105411	Ø8	10, 20, 30... pcs	28	41.5	8.5	6.5	12	1
40105421	Ø10	10, 20, 30... pcs	33	46	10.5	6.5	12	1
40105431	Ø12	10, 20, 30... pcs	33	46	13	6.5	12	1
40105441	Ø14	10, 20, 30... pcs	35	48	15	6.5	12	1
40105451	Ø18	10, 20, 30... pcs	40	53	19.5	6.5	12	1.5
40105461	Ø20	10, 20, 30... pcs	40	53	21.2	6.5	12	1.5
40105471	Ø21.3	10, 20, 30... pcs	40	53	22.5	6.5	12	1.5
40105481	Ø27	10, 20, 30... pcs	47	60	28	6.5	12	1.5
Fixing set (for 10 tube clamps)								
40005491	30 slot geometry	10, 20, 30... pcs	–	–	–	–	–	–
40105491	40 slot geometry	10, 20, 30... pcs	–	–	–	–	–	–

Vario-Quick cable bracket

- For routing cables and hoses
- Simply screwed into the slot
- Can be opened and reused without any problem

Material: Black plastic



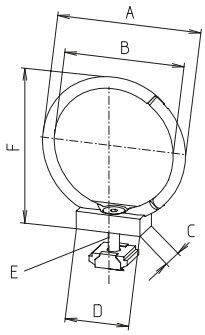

Slot stone (N) version

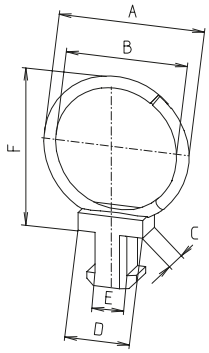

Hammer foot (HF) version

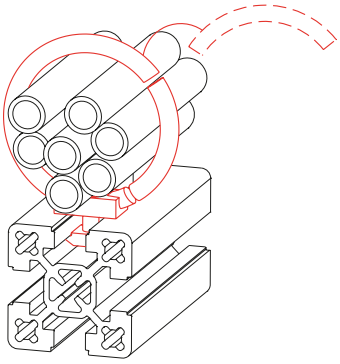

[mm]

Code No.	Type	lot sizes	Slot geometry	A	B	C	D	E	F
40081401	15 HF	10, 20, 30... pcs	30	28.5	17	10	19	9.5	28.5
40181401	15 HF	10, 20, 30... pcs	40	28.5	17	10	19	9.5	28.5
40081441	15 N	10, 20, 30... pcs	30	28.5	17	12	20	M 5	28.5
40181521	15 N	10, 20, 30... pcs	40	28.5	17	12	20	M 5	28.5
40081411	25 HF	10, 20, 30... pcs	30	36.5	25	10	19	9.5	36.5
40181411	25 HF	10, 20, 30... pcs	40	36.5	25	10	19	9.5	36.5
40081451	25 N	10, 20, 30... pcs	30	36.5	25	12	20	M 5	36.5
40181531	25 N	10, 20, 30... pcs	40	36.5	25	12	20	M 5	36.5
40081421	35 HF	10, 20, 30... pcs	30	47.5	35	10	19	9.5	47.5
40181421	35 HF	10, 20, 30... pcs	40	47.5	35	10	19	9.5	47.5
40081461	35 N	10, 20, 30... pcs	30	47.5	35	12	20	M 5	47.5
40181541	35 N	10, 20, 30... pcs	40	47.5	35	12	20	M 5	47.5
40081431	45 HF	10, 20, 30... pcs	30	56.5	45	10	19	9.5	56.5
40181431	45 HF	10, 20, 30... pcs	40	56.5	45	10	19	9.5	56.5
40181551	45 N	10, 20, 30... pcs	40	56.5	45	12	20	M 5	56.5

Cable straps with velcro



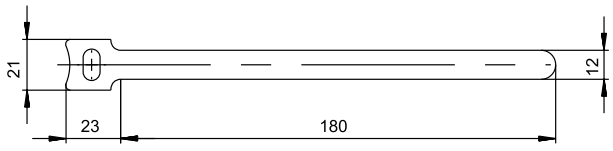

Code No.	Scale of pack quantities
91815	5, 10, 15... piece

Panels and accessories

Sliding door profile

- The sliding door profile is inserted into the longitudinal slot of the BLOCAN® profile. Then the bead moulding is placed in the bottom sliding door profile. As illustrated in the diagram, the panels can now be inserted.

Material: Black plastic
Panel cut length:
Frame internal height -17 mm for 6 mm panels and -22 mm for 8 mm panels.

For sliding doors with a profile frame, the sliding piece on page 110 or the roller module in the safety guard section on page 458 must be used.

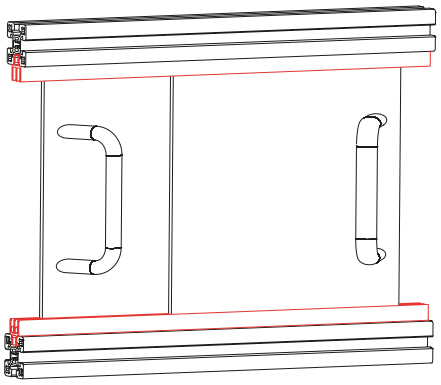



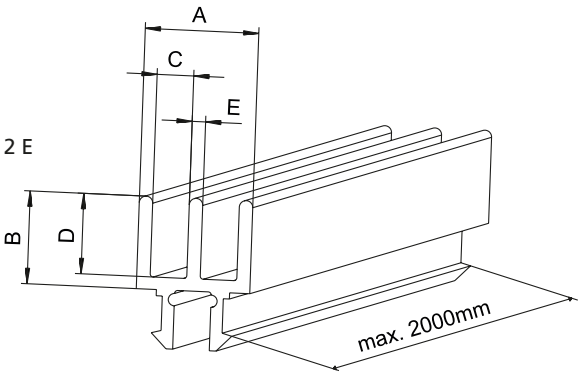



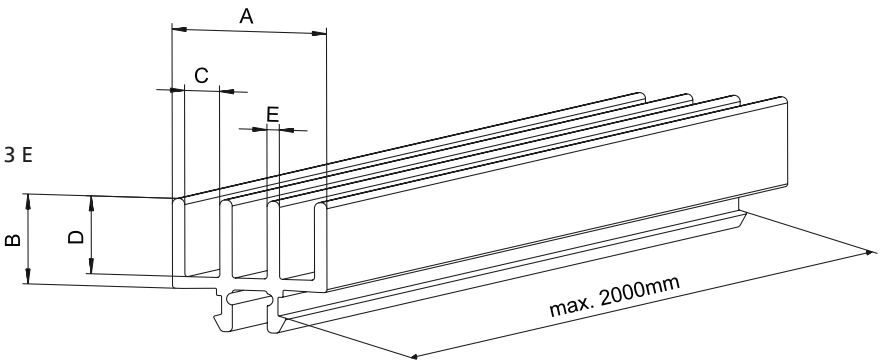

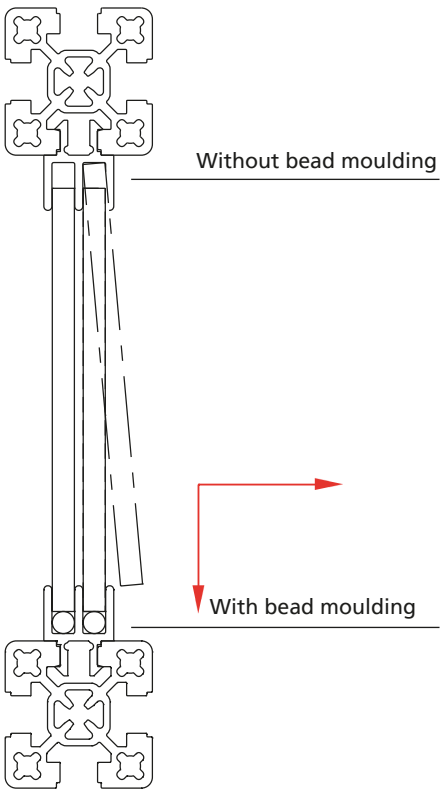

[mm]

Code No.	Type	Slot geometry	A	B	C	D	E
Without bead moulding							
4000553	2E, cut to size	30	19	15	6,2	12,6	2
4000551	2E, bar						
4000593	3E, cut to size	30	27,4	15	6,2	13	2,2
4000591	3E, bar						
4010555	2E, cut to size	40	18,6	15	6	13	2,2
4010551	2E, bar						
4010557	2E, cut to size	40	28	17,5	8,3	15	6
4010556	2E, bar						
On request	3E, cut to size	40	27,4	15	6,2	13	2,2
On request	3E, bar						
With bead moulding							
4000552	2E, cut to size	30	19	15	6,2	12,6	2,2
4000550	2E, bar						
4000592	3E, cut to size	30	27,4	15	6,2	13	2,2
4000590	3E, bar						
4010552	2E, cut to size	40	18,6	15	6	13	2,2
4010550	2E, bar						
4010554	2E, cut to size	40	28	17,5	8,3	15	6
4010553	2E, bar						
On request	3E, cut to size	40	27,4	15	6,2	13	2,2
On request	3E, bar						

Feet, castors and accessories

Versions



Foot -plastic-



Levelling foot



Eye bolt



Connecting plate for foot



Foundation bracket -steel-



Foundation bracket -aluminium-



Base plate



Clamp FKV / FV



Base bracket

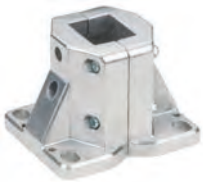

Base clamp FVV



Steering roller



Fixed castor



Foot rest FSH

Table of contents

Feet, castors and accessories

Foot -plastic- ..... p. 126

Levelling foot ..... p. 127

Eye bolt ..... p. 127

Connecting plate for foot ..... p. 128

Foundation bracket -steel- ..... p. 130

Foundation bracket -aluminium- ..... p. 131

Base plate ..... p. 132

Clamp FKV / FV ..... p. 133

Base bracket ..... p. 133

Base clamp FVV ..... p. 134

Steering roller ..... p. 136

Fixed castor ..... p. 137

Foot rest FSH ..... p. 138

Feet, castors and accessories

Foot

- Visually attractive
- Alternative to conventional levelling feet
- Height adjustment without tools

Material: Black plastic

Includes:
Complete foot with fastenings (galvanised) for connection to one profile.



Fixing in the slot



Fixing to the face



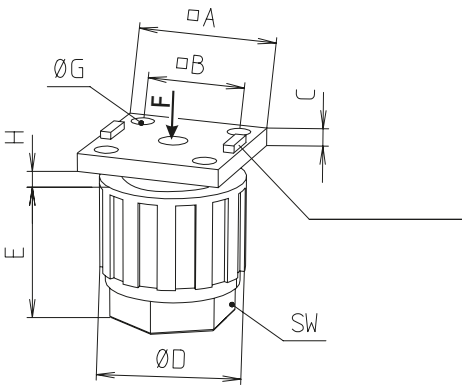

H = height adjustment

Centring pin (if necessary, can be removed with a pliers)

[mm]

Code No.	Slot geometry	A	B	C	D	E	G*	Max. H	Wrench size	F [N]
Fixing in the slot and to the face of the profile										
4008301	30	30	20.5	5	30	29.5	4.5	15	22	1000
4018301	40	40	28	5	40	39.5	6.6	23	30	1200
Fixing to the face of the profile (with connecting plate t = 15 mm)										
4300301	For F-30x60	30	20.5	5	30	29.5	4.5	15	22	1000
4310301	For F-30x80	30	20.5	5	30	29.5	4.5	15	22	1000
4290301	For F-30x100	30	20.5	5	30	29.5	4.5	15	22	1000
4320301	For F-30x120	30	20.5	5	30	29.5	4.5	15	22	1000
4330301	For F-30x160	30	20.5	5	30	29.5	4.5	15	22	1000

Levelling foot



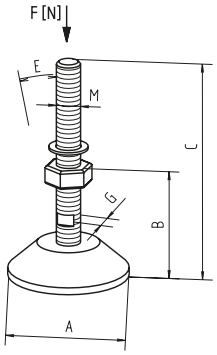

Material:
Galvanised steel parts, black plastic pivot plate. Fixation with foot connecting plates.
See page 128

[mm]

Code No.	Type	Version	A	B	C	M	E	G	F [N]
4006304	M8		47	20	52	M8	15°	12	1500
4016302	M10		50	25	93	M10	15°	12	3000
4016303	M12		80	24	117	M12	15°	12	7000
4026301	M16	Corrosion-resist.	80	29	156	M16	15°	13	10000
4046301	M20		60	39	185	M20	15°	16	10000
4696301	M20		100	39	185	M20	15°	16	10000
4696302	M20		123	61	207	M20	15°	16	20000

Levelling foot with vibration absorber

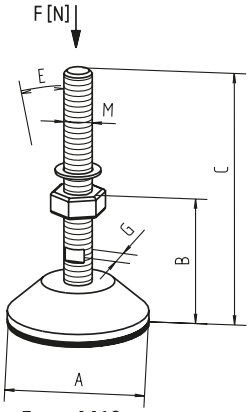

From M10

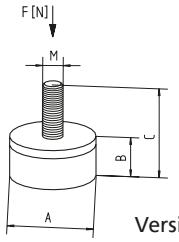

Version: M6, M8

Material: Galvanised steel parts
Black plastic pivot plate.
Supporting surface, rubber.
Fixation with foot connecting plates. See page 128.

[mm]

Code No.	Type	Version	A	B	C	M	E	G	F [N]
4006311	M6		25	12	31	M6	–	–	520
4016311	M8		30	15	35	M8	–	12	760
4016312	M10		50	25	94	M10	15°	12	3000
4016313	M12		80	40	119	M12	15°	12	7000
4026311	M16	Corrosion-resist.	80	32	159	M16	15°	13	10000
4046311	M20	.	60	42	188	M20	15°	16	10000
4696311	M20		100	39	188	M20	15°	16	10000
4046312	M20		123	70	215	M20	15°	16	10000

Eye bolt



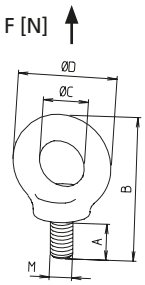

Material:
Galvanised steel
Fixation with foot connecting plates. See page 128

[mm]

Code No.	Type	Version	A	B	C	D	M
4000300	M6	DIN 580	12	39	13,5	28	M6
4000301	M8	DIN 580	13	49	20	36	M8
4000302	M10	DIN 580	17	62	25	45	M10
4000303	M12	DIN 580	20,5	73,5	30	54	M12

Feet, castors and accessories

Connecting plate for levelling feet

- Connecting plate with tapped hole for feet.
- Also suitable for taking eye bolts.

Includes:
Connecting plate incl. fastenings



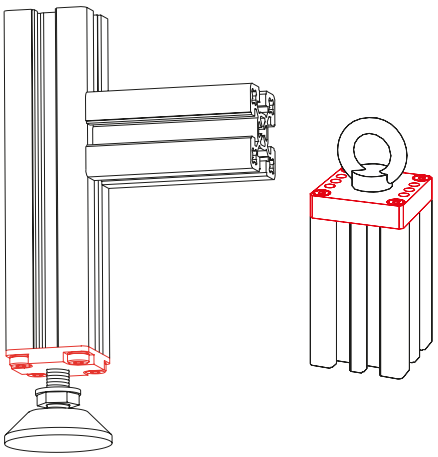

For feet and eye bolts, please see page 127

(1) Die-cast aluminium

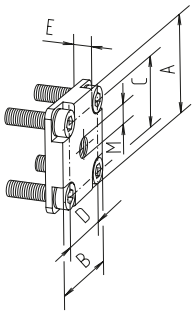

(2) Aluminium

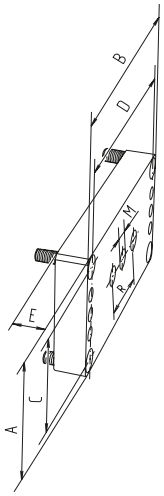

(3) Die-cast zinc

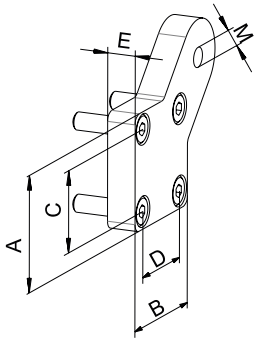

[mm]

Code No.	Type	Connec-tion	See figure	A	B	C	D	E	M	R
4574401	30x30	M8	3	30	30	21	21	10	M8	–
4305402	F-30x60	M6	2	30	60	21.5	48	15	M6	–
4305403	F-30x60	M8	2	30	60	21.5	48	15	M8	–
4295402	F-30x100	M6	2	30	100	21.5	88	15	M6	–
4295403	F-30x100	M8	2	30	100	21.5	88	15	M8	–
4295404	F-30x100	M10	2	30	100	21.5	88	15	M10	–
4295405	F-30x100	M12	2	30	100	21.5	88	15	M12	–
4D34400	40x40, F-40x40-L	M8	3	40	40	28	28	10	M8	–
4D34401	40x40, F-40x40-L	M10	3	40	40	28	28	10	M10	–
4D34402	40x40, F-40x40-L	M12	3	40	40	28	28	10	M12	–
4034404	40x80, F-40x80-L, F-40x80/3	M8	2	40	80	28	68	7	M8	–
4034402	40x80, F-40x80-L F-40x80/3	M10	2	40	80	28	68	7	M10	–
4034403	40x80, F-40x80-L, F-40x80/3	M12	2	40	80	28	68	7	M12	–
4655402	F-40x160	M8	2	40	160	28	148	15	M8	–
4655403	F-40x160	M10	2	40	160	28	148	15	M10	–
4655404	F-40x160	M12	2	40	160	28	148	15	M12	–
4655405	F-40x160	M16	2	40	160	28	148	15	M16	–

[mm]

Code No.	Type	Connec-tion	See figure	A	B	C	D	E	M	R
4085401	F-50x50, F-50x50-L	M8	1	50	50	38	38	7	M8	–
4085402	F-50x50, F-50x50-L	M10	1	50	50	38	38	7	M10	–
4665402	F-50x100	M8	2	50	100	38	88	15	M8	–
4665403	F-50x100	M10	2	50	100	38	88	15	M10	–
4665404	F-50x100	M12	2	50	100	38	88	15	M12	–
4665405	F-50x100	M16	2	50	100	38	88	15	M16	–
4675402	F-50x200	M8	2	50	200	–	165.5	15	M8	–
4675403	F-50x200	M10	2	50	200	–	165.5	15	M10	–
4675404	F-50x200	M12	2	50	200	–	165.5	15	M12	–
4675405	F-50x200	M16	2	50	200	–	165.5	15	M16	–
4024405	60x60	M8	1	60	60	43/48	43/48	7	M8	–
4024402	60x60	M10	1	60	60	43/48	43/48	7	M10	–
4024403	60x60	M12	1	60	60	43/48	43/48	7	M12	–
4224402	F-60/1, F-60x60-L	M8	1	60	60	43/48	43/48	6.5	M8	–
4224403	F-60/1, F-60x60-L	M10	1	60	60	43/48	43/48	6.5	M10	–
4065402	F-60x120	M10	2	120	60	108	48	15	M10	–
4065403	F-60x120	M12	2	120	60	108	48	15	M12	–
4065404	F-60x120	M16	2	120	60	108	48	15	M16	–
4044404	80x80, F-80/2, F-80-L, F-80x80/2-L	M10	1	80	80	68	68	8	M10	–
4044405	80x80, F-80/2, F-80-L, F-80x80/2-L	M12	1	80	80	68	68	8	M12	–
4044402	80x80, F-80/2, F-80-L, F-80x80/2-L	M16	1	80	80	68	68	8	M16	–
4044403	80x80, F-80/2, F-80-L, F-80x80/2-L	M20	1	80	80	68	68	8	M20	–
4685402	F-80x120	M10	2	80	120	68	108	15	M10	–
4685403	F-80x120	M12	2	80	120	68	108	15	M12	–
4685404	F-80x120	M16	2	80	120	68	108	15	M16	–
4685405	F-80x120	M20	2	80	120	68	108	15	M20	–
4075403	F-80x160, F-80x160-L	M12	2	160	80	148	68	15	M12	44
4075404	F-80x160, F-80x160-L	M16	2	160	80	148	68	15	M16	44
4075405	F-80x160, F-80x160-L	M20	2	160	80	148	68	15	M20	44
4695402	F-100x100	M10	1	100	100	65.5	50	15	M10	–
4695403	F-100x100	M12	1	100	100	65.5	50	15	M12	–
4695404	F-100x100	M16	1	100	100	65.5	50	15	M16	–
4695405	F-100x100	M20	1	100	100	65.5	50	15	M20	–
4164402	F-120x120	M10	1	120	120	80	80	15	M10	–
4164403	F-120x120	M12	1	120	120	80	80	15	M12	–
4164404	F-120x120	M16	1	120	120	80	80	15	M16	–
4164405	F-120x120	M20	1	120	120	80	80	15	M20	–

Feet, castors and accessories

Order instruction:

- Purchase only in lot sizes and a multiple of that see product table below

Foundation bracket –sheet steel–





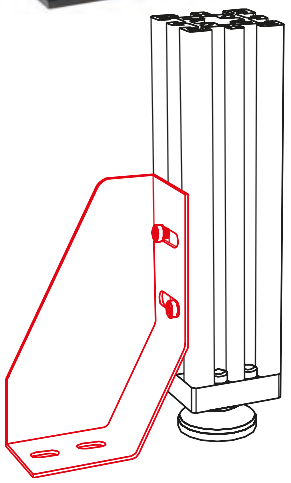

- For fixing frames, work tables and machines
- Foundation bracket can be retrospectively fixed to the profile with slot stone -R- see page 88

Material:
Sheet steel, 3 mm thick, black textured paint.
Includes: Complete set including fastenings

Socket head cap screw
M8x12, DIN 7984
Slot stone -R-

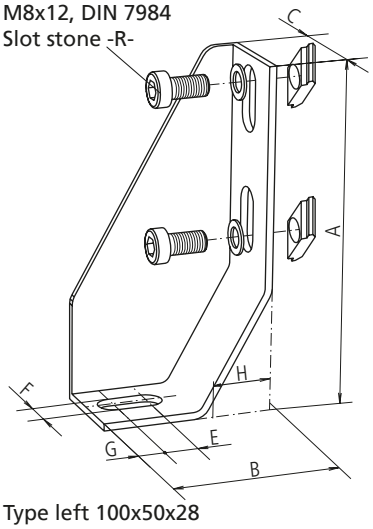

Type left 100x50x28

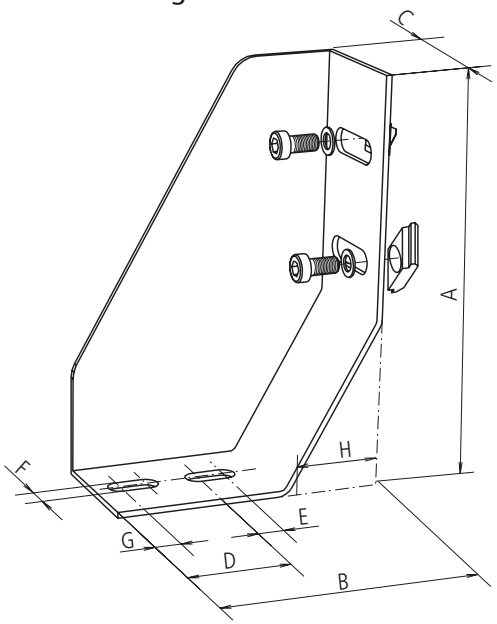

Type left 150x100x48

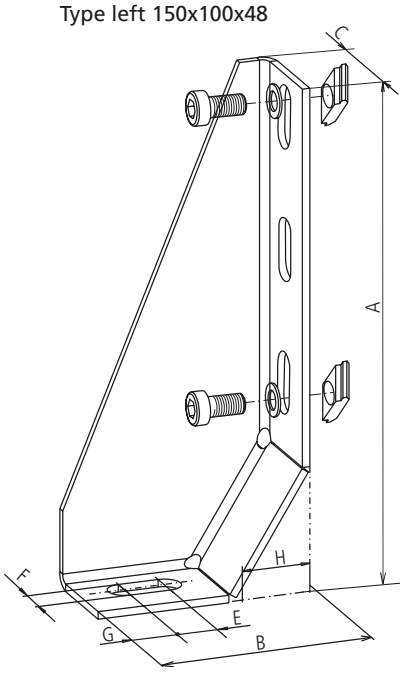

Type left 200x85x38

[mm]

Code No.	Type	A	B	C	D	E	F	G	H
4001300	left 100x50x28	100	50	28	–	10	9	8	18
4001301	right 100x50x28	100	50	28	–	10	9	8	18
4021300	left 150x100x48	150	100	48	40	10	9	10	32
4021301	right 150x100x48	150	100	48	40	10	9	10	32
4011306	left 200x85x38	200	85	38	–	19	9	16	30
4011305	right 200x85x38	200	85	38	–	19	9	16	30

Code No.	Type	lot sizes
4016611	High performance anchor M8x110	4, 8, 12... pcs

Order instruction:

- Purchase only in lot sizes and a multiple of that see product table below

Foundation bracket –aluminium–

- For fixing frames, work tables and machines
- Complete set including fastenings
- Angle is fixed to the profile with slot stones -N-. See page 87

Material:
Black powder-coated gravity die-cast aluminium



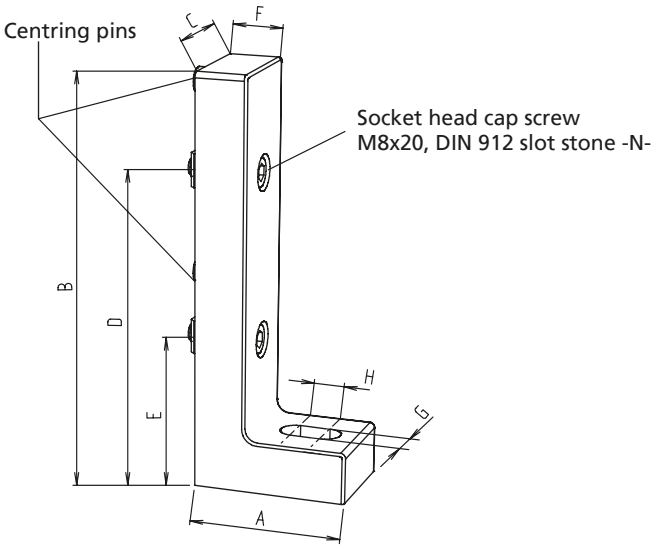

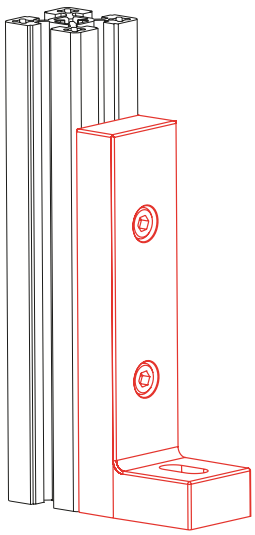

Code No.	Type	lot sizes
4016612	Floor fixing M8x115	4, 8, 12... pcs

[mm]

Code No.	Type	A	B	C	D	E	F	G	H
4011302	40 slot geometry	60	160	40	120	55	20	11	12

Feet, castors and accessories

Base plate

- Optionally available with hole, rubber foot, foot or steering roller
- Optional filling (steel plate) available to raise the overturning moment

Material:
Vibration finished gravity die-cast aluminium
(powder-coating on request)



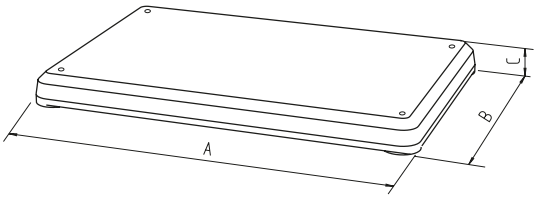

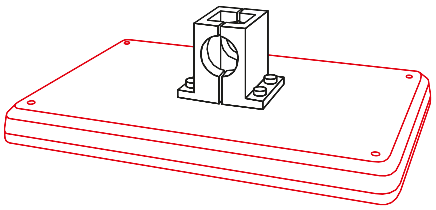

[mm]

Code No.	Type	A	B	C
230 000 100 20	FP	375	250	30

1= Joint hole

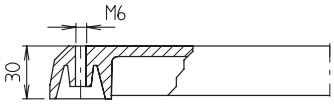

2= Rubber foot

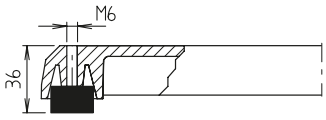

3= Foot

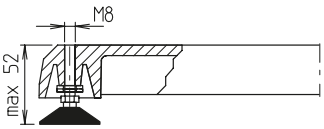

4= Steering roller with brake

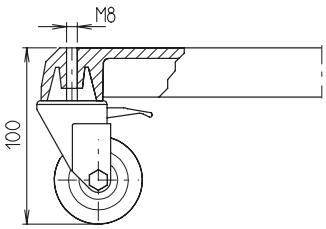

_= Without filling,
overturning moment 3 Nm

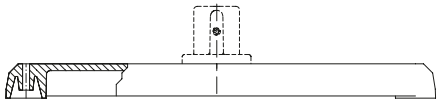

Y= Cavity with steel plate (m= 4.6 kg),
Overturning moment 6 Nm

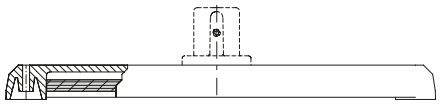

Clamp



FKV



FV

Material: Aluminium.
Stainless steel fixing
For further clamping elements, please refer to the catalogue "Connecting Technology"

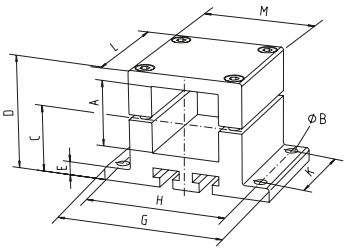

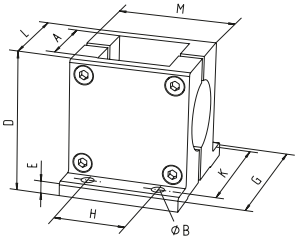

[mm]

Code No.	Type	A	Ø B	C	D	E	G	H	K	L	M
52300005030	FKV 30	30.2	7	30	51	6	84	70	40	56	56
52400005030	FKV 40	40.3	7	40	68	8	97	83	54	68	68
52500005030	FKV 50	50.4	9	50	85	10	125	105	65	85	85
52600005030	FKV 60	60.3	9	62.5	111	12	145	120	80	105	105
52800005030	FKV 80	80.4	11	80	136	16	170	148	80	126	126
53300005030	FV 30	30.2	7	–	58	6	70	28	56	42	56
53400005030	FV 40	40.3	7	–	74	8	85	40	70	56	68
53500005030	FV 50	50.4	9	–	92	10	110	50	90	70	84
53600005030	FV 60	60.4	9	–	112.5	12	137	80	120	97	105
53800005030	FV 80	80.4	11	–	142	16	156	80	135	112	126

Order instruction:

- Purchase only in lot sizes and a multiple of that see product table below

Base bracket BAK-80



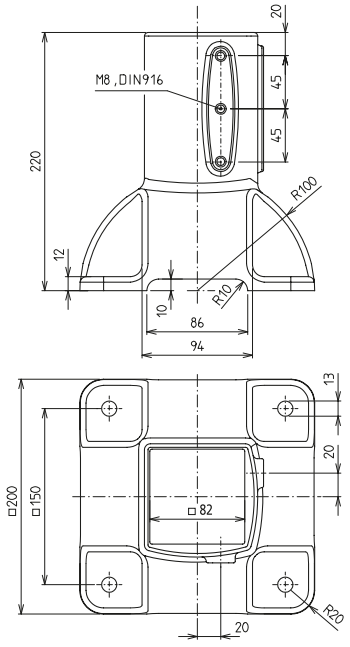

Material: Silver powder-coated gravity die-cast aluminium, stainless steel fixing

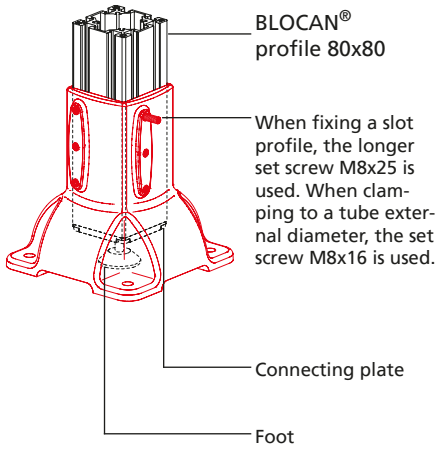

Code No.	Type	lot sizes	Version
4040501	Base bracket BAK-80	–	with set screw M8x25 DIN916-A
4016302	Levelling foot M10	–	Length 93 mm, plate Ø 50 mm
4019302	Levelling foot M10, corrosion-resistant	–	Length 93 mm, plate Ø 50 mm
4044404	Connecting plate for levelling foot	–	for BLOCAN profile S/F-80

Code No.	Type	lot sizes
4016611	High performance anchor M8x110	4, 8, 12... pcs
40495001	Set screws M8x16-A2 DIN EN ISO 4029	6, 12, 18... pcs

Feet, castors and accessories

Base clamp FVV



- Base clamp to take size 40 BLOCAN® profiles or size 40 square tubes.
- Set screws can be used to compensate for unevenness. Supporting shims, placed under the foot, prevent the set screws from digging into the floor.

Material: ground finished die-cast aluminium,
zinc plated fixing

Supporting/Levelling shims



- The levelling shims give the foot clamp a full contact surface on uneven ground.

Material: aluminium

Code No.	Type	Includes
40143011	Levelling shims for FVV 40	4 1-mm shims, 1 0.5-mm shim

FVV-NH

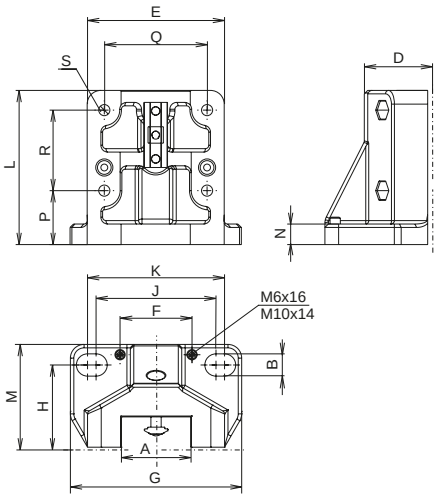

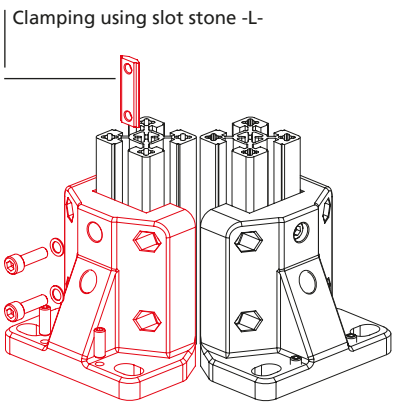

Code No.	Type	A	C	D	E	F	G	H	J	K	L	M	N	P	Q	R	S	Weight
4014310	FVV-NH 40	40.4	12.5	39.5	80	42	100	50	70	80	90	62.5	12	31.5	60	47	Ø6.5	399 g

FVV-N

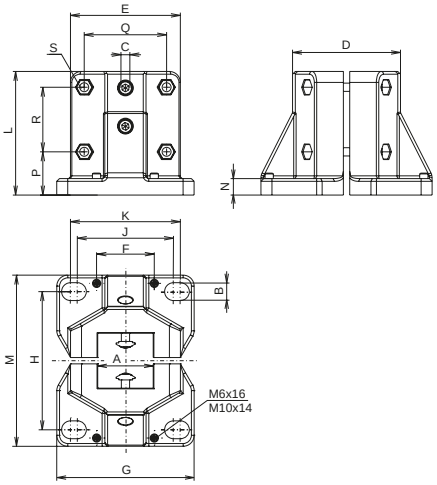

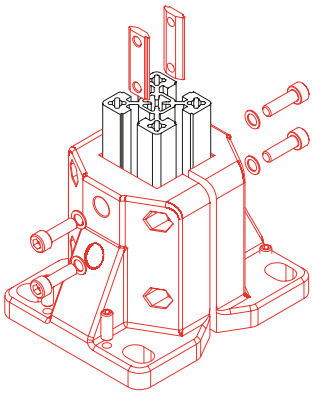

Code No.	Type	A	B	C	D	E	F	G	H	J	K	L	M	N	P	Q	R	S	Weight
4014311	FVV-N 40	40.4	12.5	6.5	79	80	42	100	100	70	80	90	125	12	31.5	60	47	M6x45	797 g

FVV-S

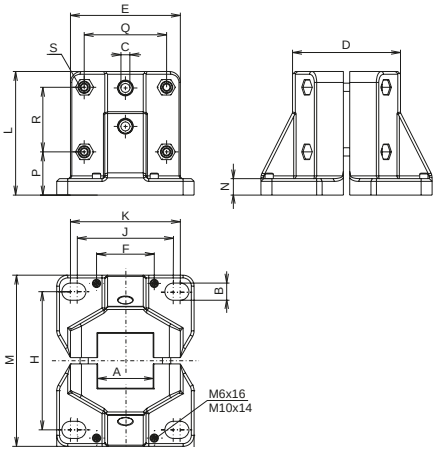

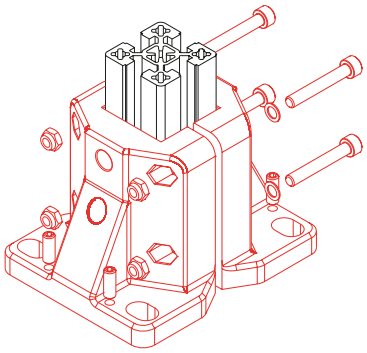

Code No.	Type	A	B	C	D	E	F	G	H	J	K	L	M	N	P	Q	R	S	Weight
4014312	FVV-S 40	40.4	12.5	6.5	79	80	42	100	100	70	80	90	125	12	31.5	60	47	M6x45	805 g

FVV-D

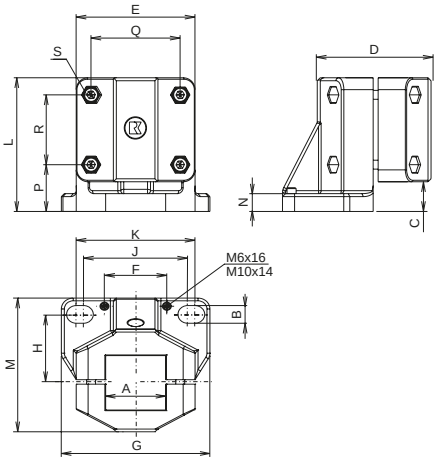

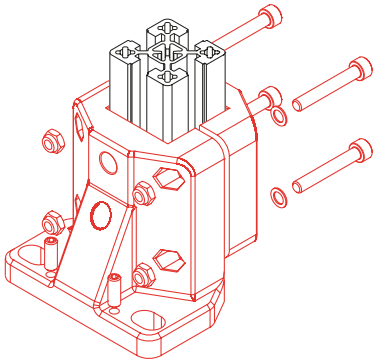

Code No.	Type	A	B	C	D	E	F	G	H	J	K	L	M	N	P	Q	R	S	Weight
4014313	FVV-D 40	40.4	12.5	20	75	80	42	100	50	70	80	90	98	12	31.5	60	47	M6x45	633 g

Feet, castors and accessories

Lockable steering roller

- The steering roller mobilises frames, tables and superstructures. It is available with a 1-hole fixing or with fixing plate. In addition, each version has a combined roller and swivel locking device.
- Both the roller and the swivel head have ball bearings, which ensures that they run smoothly even under load. The rollers are not electrically conductive.

Material: Galvanised steel
Includes: Depending on the version, with connecting plate or slot stone.

With slot stone



With connecting plate



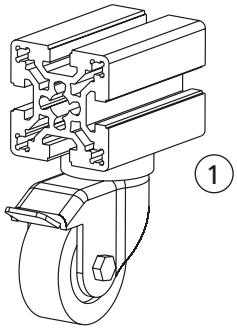

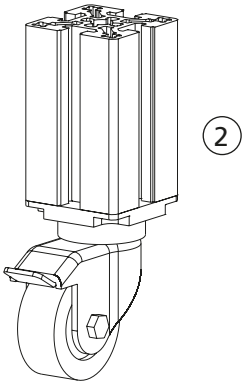

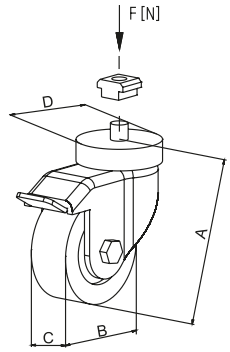

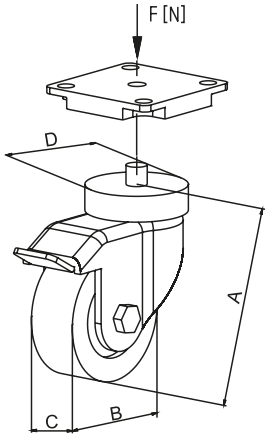

[mm]

Code No.	Type	Suitable for:	A	B	C	D	Resist. F [N]
4016646	With slot stone	30 geometry (1)	70	50	20	39	400
4016648	With slot stone	40 geometry (1)	70	50	20	39	400
4006654	30x30	F-30x30 (2)	70	50	20	39	400
4016654	40x40, F-40x40-L	F-profiles 40 (2)	70	50	20	39	400
4016674	40x40, 40x40-L	F-profiles 40 (2)	98	75	25	43	600
4306644	F-30x60	F-profiles 30x60 (2)	70	50	20	39	400
4296644	F-30x100	F-profiles 30x100 (2)	100	75	25	39	600
4656644	F-40x160	F-profiles 40x160 (2)	100	75	25	39	600
4086644	F-50x50, F-50x50-L	F-profiles 50 (2)	70	50	20	39	400
4666644	F-50x100	F-profiles 50x100 (2)	100	75	25	39	600
4676644	F-50x200	F-profiles 50x200 (2)	100	75	25	39	600
4026644	60x60	F-profiles 60 (2)	100	75	25	39	600
4026648	60x60	F-profiles 60 (2)	133	100	32	53	900
4226644	F-60x60-L, F-60x60/1	F-profiles 60-L (2)	100	75	25	39	600
4066648	F-60x120	F-profiles 60x120 (2)	133	100	32	53	900
4036644	40x80, F-40x80-L, F-40x80/3	F-profiles 40x80 (2)	70	50	20	39	400
4046644	80x80, F-80x80-L	F-profiles 80 (2)	100	75	25	39	600
4046648	80x80, F-80x80-L	F-profiles 80 (2)	133	100	32	53	900
4686644	F-80x120	F-profile 80x120 (2)	133	100	32	53	900
4076644	F-80x160, F-80x160-L	F-profiles 80x160 (2)	100	75	25	39	600
4076648	F-80x160, F-80x160-L	F-profiles 80x160 (2)	133	100	32	53	900
4696644	F-100x100	F-profiles 100x100 (2)	133	100	32	53	900
4166644	F-120x120	F-profiles 120x120 (2)	182	150	32	53	1100

Fixed castor

The fixed castor is the ideal complement to the steering roller. Combining 2 fixed castors with steering rollers makes it easier to manoeuvre the superstructure.

With slot stone



With connecting plate



- Fixed castors should be mounted on the front end. The rollers are not electrically conductive.

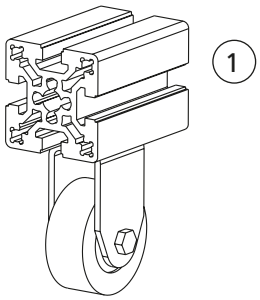

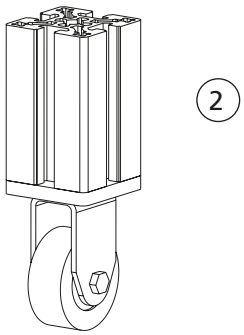

Material: Galvanised steel
Includes: Depending on the version, with connecting plate or slot stone.

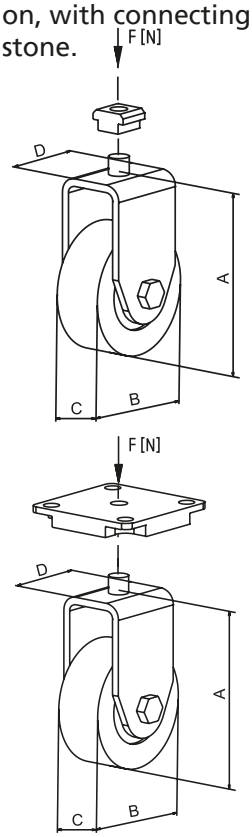

[mm]

Code No.	Type	Suitable for:	A	B	C	D	Resist. F [N]
4006647	With slot stone	30 geometry (1)	70	50	20	34	400
4016647	With slot stone	40 geometry (1)	70	50	20	34	400
4006655	30x30	F-30x30 (2)	70	50	20	34	400
4016655	40x40, F-40x40-L	F-profiles 40 (2)	70	50	20	34	400
4016675	40x40, 40x40-L	F-profiles 40 (2)	98	75	25	43	600
4306645	F-30x60	F-profiles 30x60 (2)	70	50	20	34	400
4296645	F-30x100	F-profiles 30x100 (2)	100	75	25	34	600
4656645	F-40x160	F-profiles 40x160 (2)	100	75	25	34	600
4086645	F-50x50, F-50x50-L	F-profiles 50 (2)	70	50	20	34	400
4666645	F-50x100	F-profiles 50x100 (2)	100	75	25	34	600
4676645	F-50x200	F-profiles 50x200 (2)	100	75	25	34	600
4026645	60x60	F-profiles 60 (2)	100	75	25	34	600
4026649	60x60	F-profiles 60 (2)	133	100	32	53	900
4226645	F-60x60-L, F-60x60/1	F-profiles 60-L (2)	100	75	25	34	600
4066645	F-60x120	F-profiles 60x120 (2)	100	75	25	34	600
4066649	F-60x120	F-profiles 60x120 (2)	133	100	32	53	900
4036645	40x80,F-40x80-L, F-40x80/3	F-profiles 40x80 (2)	70	50	20	34	400
4046645	80x80	F-profiles 80 (2)	100	75	25	34	600
4046649	80x80	F-profiles 80 (2)	133	100	32	53	900
4686645	F-80x120	F-profile 80x120 (2)	133	100	32	53	900
4076645	F-80x160, F-80x160-L	F-profiles 80x160 (2)	100	75	25	34	600
4076649	F-80x160, F-80x160-L	F-profiles 80x160 (2)	133	100	32	53	900
4696645	F-100x100	F-profiles 100x100 (2)	133	100	32	53	900
4166645	F-120x120	F-profiles 120x120 (2)	182	150	32	53	1100

Feet, castors and accessories

Foot rest FSH

- Individual, infinitely variable adjustment to different persons
- Height adjustment without time-consuming assembling by means of spring adjustment
- By slightly lifting the tread the height of the system can be quickly adjusted and locks automatically when released

Material: Clear anodised extruded aluminium profile tread, polyamide plastic sliding pieces, galvanised steel parts



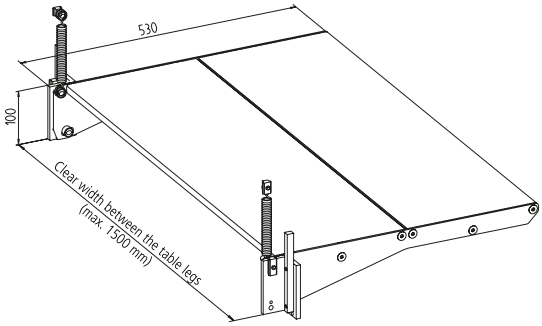

Application example

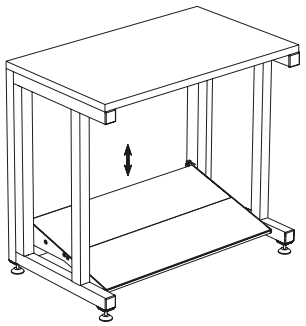

Code No.	Suitable for profile
4010642 _ _ _ _	All as of 40 slot geometry (except F-50 and L-profiles)

Clear width [mm]



Fittings

Versions



Butt hinge -aluminium-



Butt hinge -plastic-



Lift off hinge - aluminium-



Lift off hinge -plastic-



Piano hinge



Lever cylinder lock



Ball catch



Magnetic lock



Magnetic lock universal



Ball catch universal



Slam Latch



Door stopper



Handle



Handle profile



Handle/Handrail



Safety switch AZ



Safety switch AZM

Table of contents

Fittings	Butt hinge -aluminium-	p. 142
	Butt hinge -plastic-	p. 143
	Lift off hinge -aluminium-	p. 144
	Lift off hinge -plastic-	p. 141
	Piano hinge	p. 146
	Lever cylinder lock	p. 148
	Ball catch	p. 148
	Magnetic lock	p. 149
	Magnet lock universal	p. 150
	Ball catch universal	p. 151
	Slam Latch	p. 153
	Door stopper	p. 154
	Handle	p. 154
	Handle profile	p. 155
	Handle/Handrail	p. 155
Electrical accessories	Safety switch AZ	p. 156
	Safety switch AZM	p. 158

Fittings

Butt hinge

- Can be installed on all struts and panels. The exact position of the hinge is determined by fixing pins, which can be replaced depending on the purpose.

Material:
Black anodised aluminium, galvanised steel.

Complete with fixing set (for profile assembly).



Version 1



Version 2



Version 3

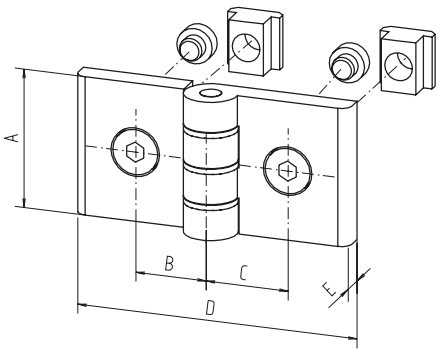

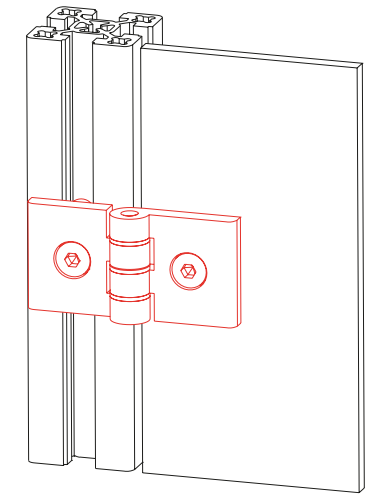

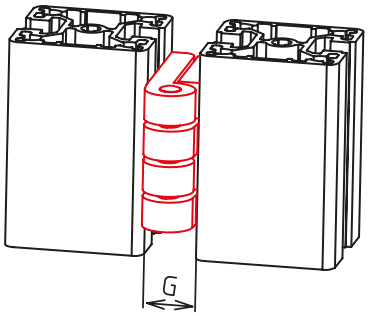

[mm]

Code No.	Type	Version	A	B	C	D	E	G
Butt hinge 2-part								
4005525	30x30	1	50	17	17	56	7	13
4005526	30x30 to 40x40	1	50	17	22	56	7	13
4015525	40x40	2	40	22	22	79	7	15
4045526	40x40 to 60x60	2	40	22	32	79	7	15
4085525	F-50x50	2	40	27	27	79	7	15
4025525	60x60 (except F-60x60)	2	40	32	32	79	7	15
Butt hinge 3-part								
4015517	40	3	45	22	22	123	7	–

Hinge assembly variants:







Order instruction:

- Purchase only in lot sizes and a multiple of that see product table below

Butt hinge

- For mounting on all struts and panels
- The exact position of the hinge is determined by fixing pins – these can be bent with a pliers if required

Material:
Black plastic, galvanised steel

Fixing set:
The fixing set is not included in the Order No. and must be ordered separately.



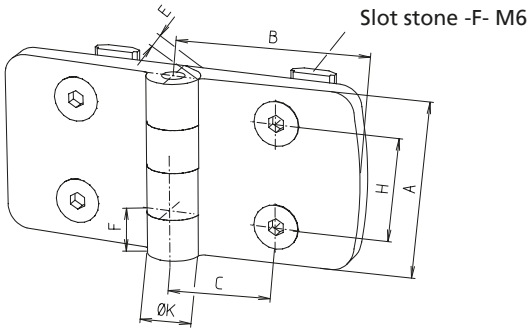

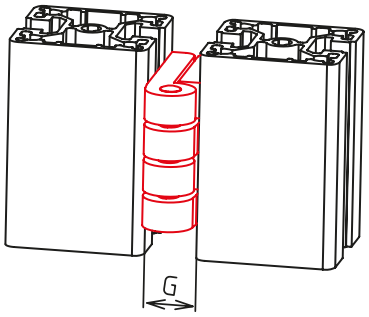

[mm]

Type	A	B	C	E	F	G	H	K
30	48	29.5	17.5	9	12	18	28	14
40	48	38.5	22.5	9	12	18	28	14
50	48	48.5	27.5	9	12	18	28	14
60	48	57.5	32.5	9	12	18	28	14

Post	Code No. Butt hinge			
	Door profile 30	Door profile 40	Door profile 50	Door profile 60
Profile 30	4008510	–	–	–
Profile 40	4008511	4008514	–	–
Profile 50	4008512	4008515	4008517	–
Profile 60	4008513	4008516	4008518	4008519

Fixing set

Code No. for one hinge half	lot sizes	Slot geometry
4006520	10, 20, 30... pcs	30 (slot stone -F-)
4016520	10, 20, 30... pcs	40 (slot stone -F-)

Fittings

Lift off hinge

- The narrow lift off hinges are generally mounted between two profiles to save space.
- Flaps or doors can be dismounted simply by lifting them off

Material:
Black anodised aluminium, galvanised steel

Complete with fixing set (for profile assembly).



Version 1



Version 2

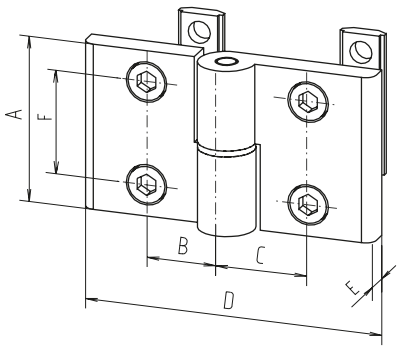

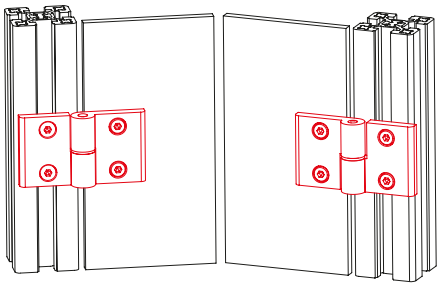

[mm]

Code No.	Slot geometry	Version	A	B	C	D	E	F	G
Lift off hinge 2-part									
4015520	40	1, left	45	22	22	79	7	28	15
4015521	40	1, right	45	22	22	79	7	28	15
4045521	40	1, left	45	22	32	79	7	28	15
4045522	40	1, right	45	22	32	79	7	28	15
Lift off hinge 3-part									
4015515	40	2	45	22	22	123	7	28	–

Lift off hinge (narrow version)

- Can be mounted on all struts and panels. Flaps or doors can be dismounted simply by lifting them off.

Material:
Black anodised aluminium, galvanised steel

Complete with fixing set (for profile assembly).



Right version

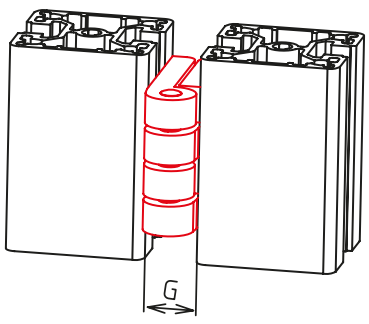

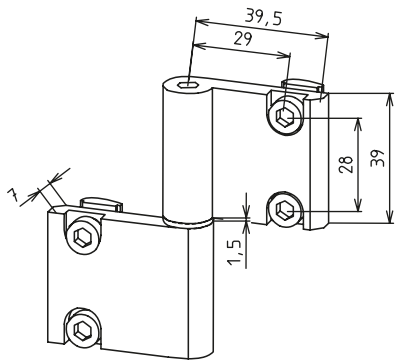

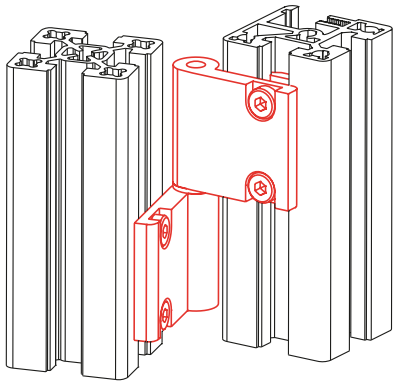

[mm]

Code No.	Slot geometry	Version	G
4015527	30	Left	7.5
4015526	30	Right	7.5
4015523	40	Left	7.5
4015522	40	Right	7.5

Order instruction:

- Purchase only in lot sizes and a multiple of that see product table below

Lift off hinge

- Can be installed on all struts and panels.
- Flaps or doors can be dismounted simply by lifting them off.
- The exact position of the hinge is determined by fixing pins, which can be bent with a pliers if required.
- The sizes can be combined with each other.

Material:
Black plastic, galvanised steel

Fixing set:
The fixing set is not included in the Order No. and must be ordered separately.



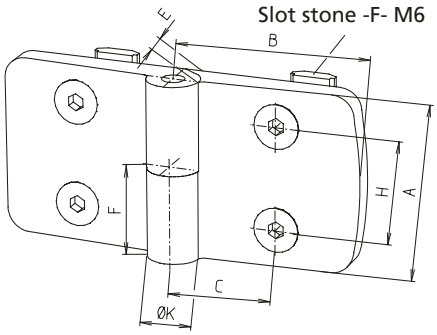

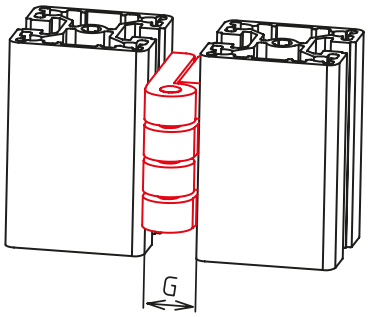

[mm]

Type	A	B	C	E	F	G	H	K
30	48	29.5	17.5	9	24	18	28	14
40	48	38.5	22.5	9	24	18	28	14
50	48	48.5	27.5	9	24	18	28	14
60	48	57.5	32.5	9	24	18	28	14

Version	Post	Code No. Lift off hinge			
		Door profile 30	Door profile 40	Door profile 50	Door profile 60
Right	Profile 30	4008530	–	–	–
	Profile 40	4008532	4008540	–	–
	Profile 50	4008534	4008542	4008550	–
	Profile 60	4008536	4008544	4008552	4008560
Left	Profile 30	4008531	–	–	–
	Profile 40	4008533	4008541	–	–
	Profile 50	4008535	4008543	4008551	–
	Profile 60	4008537	4008545	4008553	4008561

Fixing set

Code No. for one hinge half	lot sizes	Slot geometry
4006520	10, 20, 30... pcs	30 (slot stone -F-)
4016520	10, 20, 30... pcs	40 (slot stone -F-)

Fittings

Piano hinge

- Variable in length
- Taylor-made orderable

Material:
aluminium clear anodized
sliding disks plastic
dowel pins, galvanised steel
Includes:
complete with fixing set

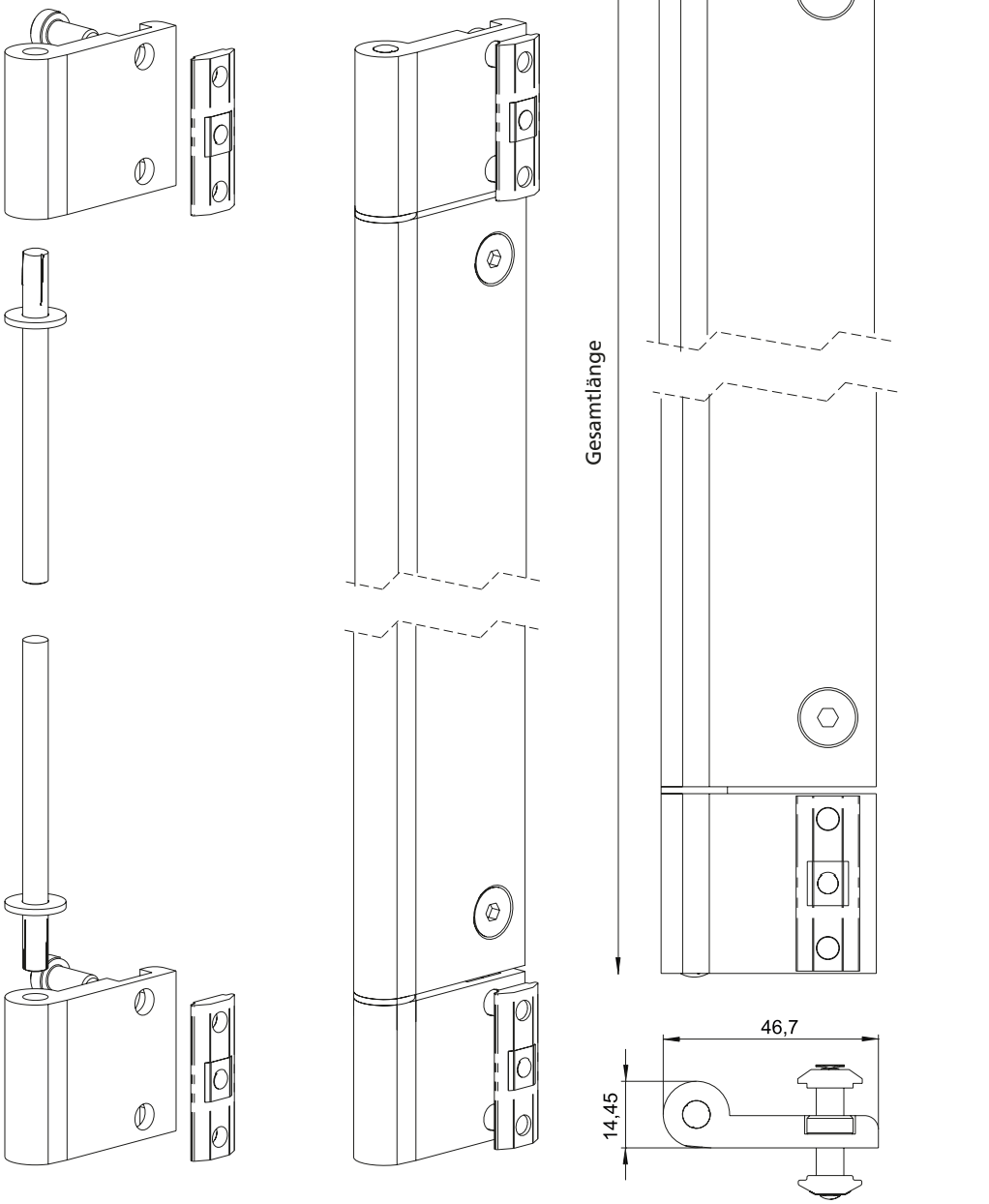

Code No.	Type	length	Max. length	Slot geometry
4010627 _ _ _ _	Band hinge complete	200	2500	40

Length [mm]



Fittings

Lever cylinder lock

- Complete with 2 keys. For locking lightweight doors and flaps

Material: Plastic, galvanised steel.



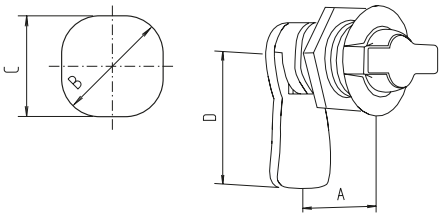

[mm]

Code No.	Type	A	B	C	D
4016600	15	15	22.5	21	45
4026600	25	25	22.5	21	45

Ball catch

Material:
Aluminium, brass
Fixing set:
Galvanised steel

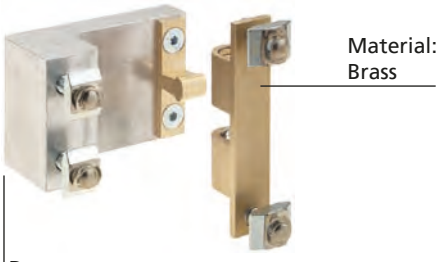

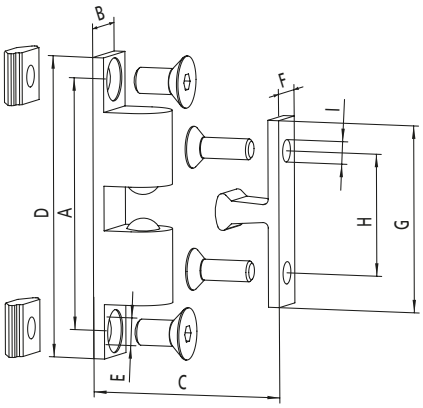

[mm]

Code No.	Type	A	B	C_{min}	D	E	F	G	H	I
4010606	Without door stop	48.5	11.8	15.8	58	5.3	8.6	36	23.5	4.3
4000608	With door stop for fixing profile 30 to 30									
4010607	With door stop for fixing profile 30 to 40									
4010608	With door stop for fixing profile 40 to 40									
4000609	With door stop for fixing profile 50 to 30									
4010609	With door stop for fixing profile 50 to 40									

Magnetic lock

- Suitable from profile size 40
- Complete with fixing set

Material:
Aluminium, plastic, galvanised steel

Magnetic lock with striker –
Installed in panel without frame



Magnetic lock with striker –
Installed in panel with frame



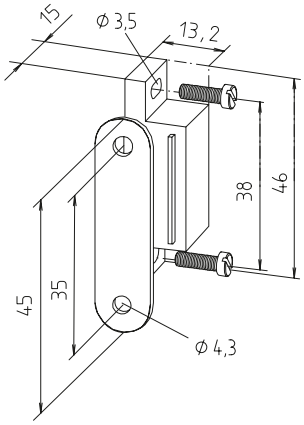

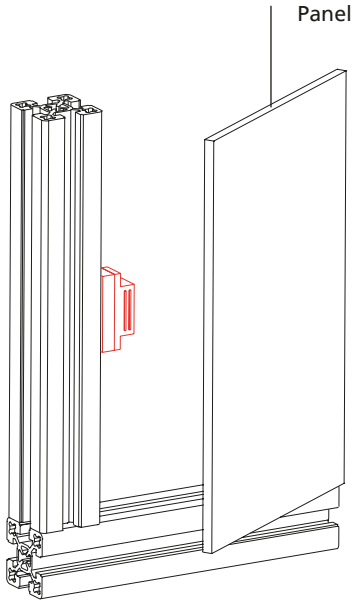

Code No.	Profile assembly	Installation	Sim. to fig.
4010605	All, except 30	Without frame	1
4010604	All, except 30	Profiles centr.	2
4000610	30 to 30	Profiles centr.	2
4010611	40 to 30	Profiles centr.	2
4010612	40 to 30	Profiles flush	3
4080603	50 to 30	Profiles flush	3
4080606	50 to 40	Profiles centr.	2
4080604	50 to 40	Profiles flush	3

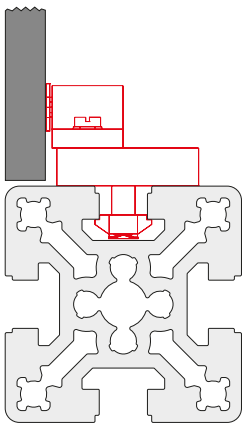
Fig. 1

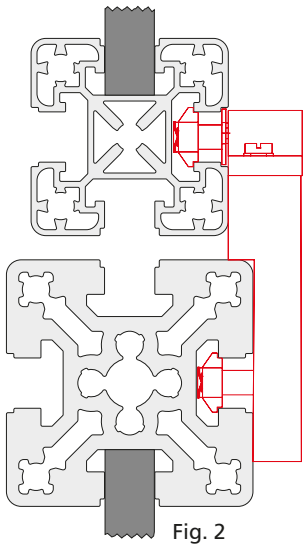
Fig. 2

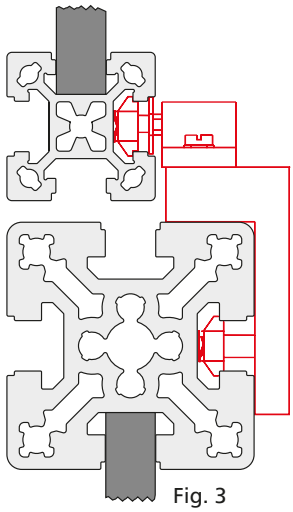
Fig. 3

Fittings

Magnetic lock universal

- Suitable from profile size 30 for all assembly versions
- Holding force 10/20 N depends on mounting direction

Material:
polyamide glasfibre reinforced
steel parts zincplated



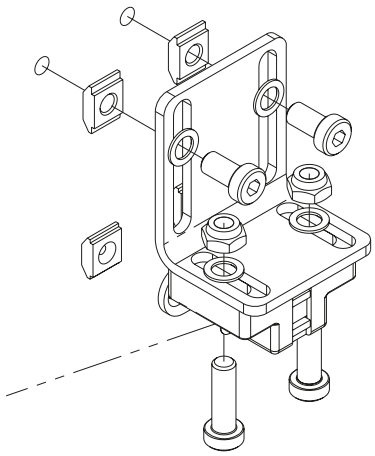

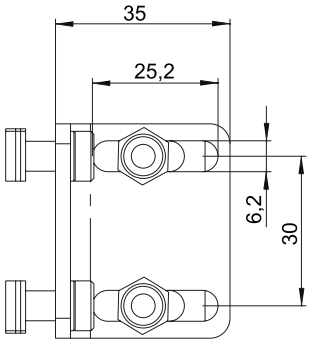

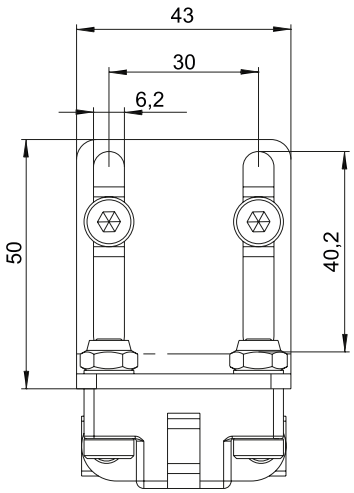

- Assembly versions

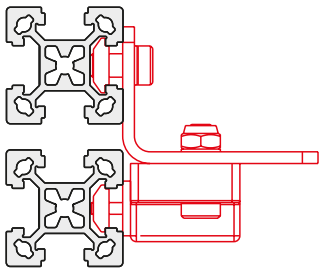

30 to 30 - Profile

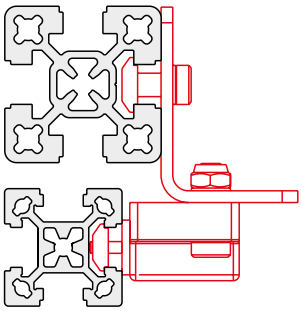

30 to 40 - Profile flush

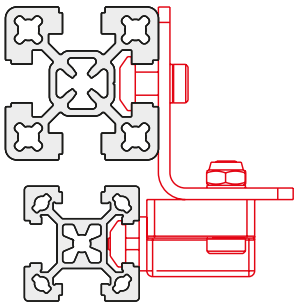

30 to 40 - Profile centred

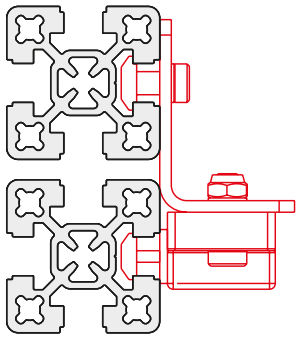

40 to 40 - Profile

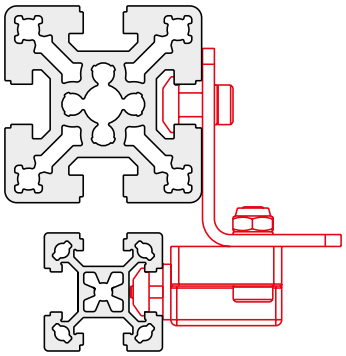

30 to 50 - Profile centred

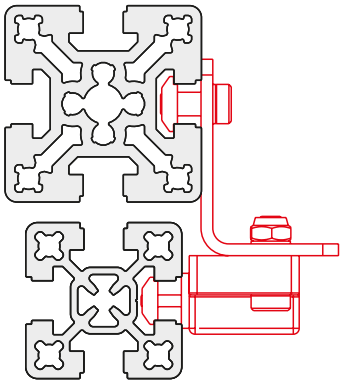

40 to 50 - Profile centred

Code No.	Type	Slot geom.
4010625	Magnetic lock universal with fixing set	30/40
4010626	Magnetic lock universal without fixing set	—

Ball catch universal

- Suitable from profile size 30 for all assembly versions
- Holding force 50 N

Material:
polyamide glasfibre reinforced
steel parts zincplated



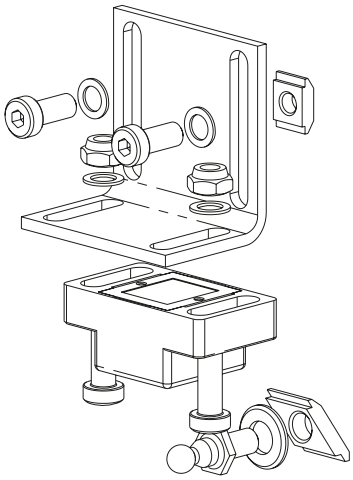

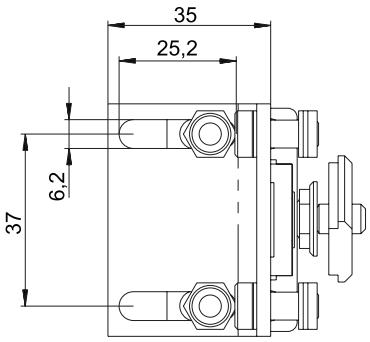

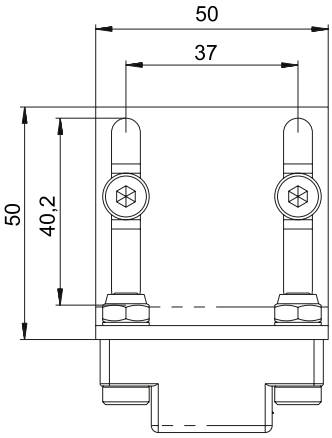

- Assembly versions

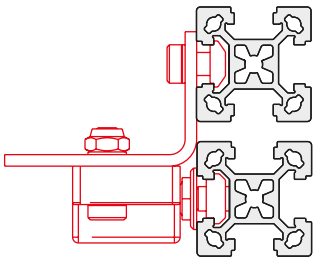
30 to 30 - Profile

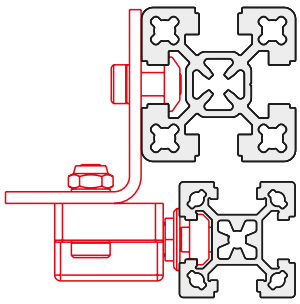
30 to 40 - Profile flush

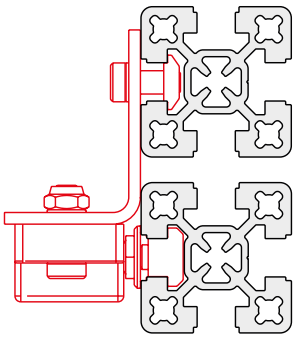
40 to 40 - Profile

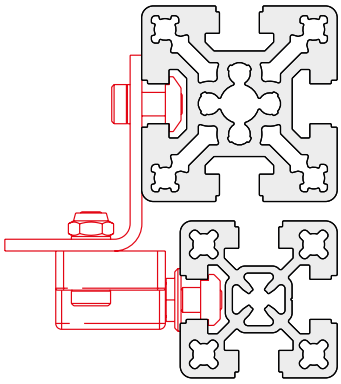
40 to 50 - Profile flush

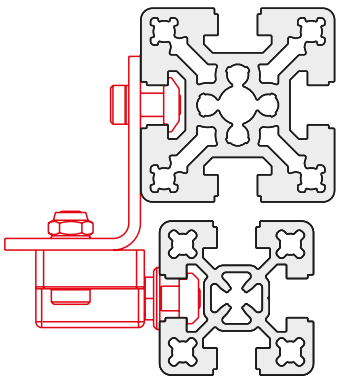
40 to 50 - Profile centred

Code No.	Type	Slot geom.
4010630	Ball catch universal with fixing set	30/40
4010631	Ball catch universal without fixing set	—

Fittings

Slam Latch PRO

Material: die-cast aluminium
black powder-coated

Includes:
complete with fixing set.



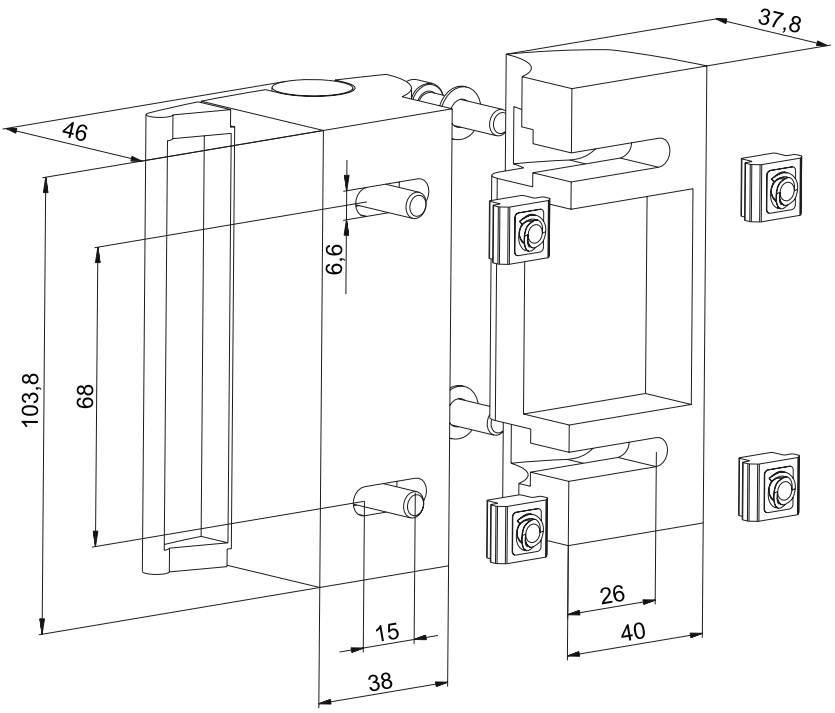



[mm]

Code No.	Slot geometry
401A530	40

Slam Latch Compact

Material: die-cast aluminium
black powder-coated

Includes:
complete with fixing set.



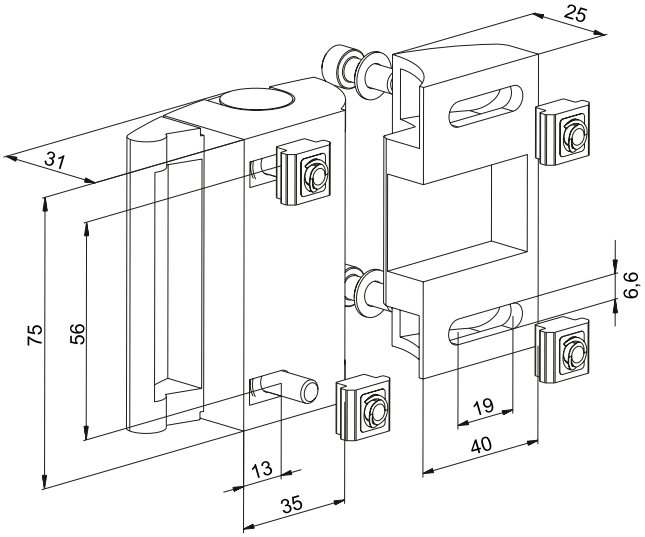



[mm]

Code No.	Slot geometry
401A531	40

Fittings

Door stopper

Material: Black plastic, galvanised steel
Complete with fixing set:



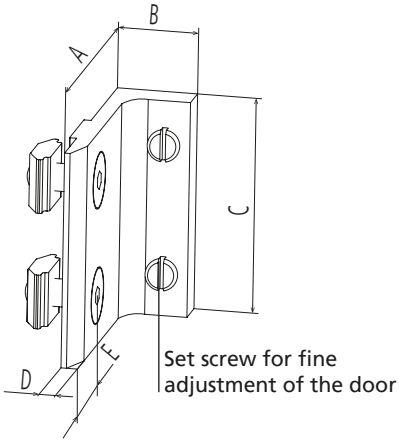

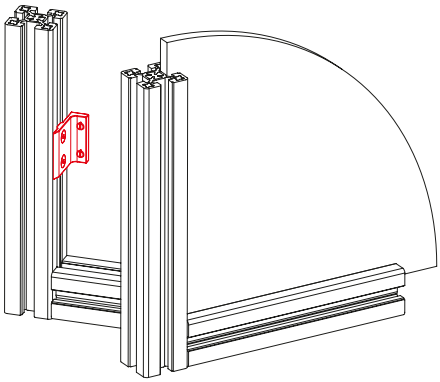

[mm]

Code No.	Slot geometry	A	B	C	D	E
4008650	30	34	14.7	40	3	11
4018650	40	44	14.7	40	3	16

Handle

Material size 150 and 197:
PP plastic
Material size 152:
Black anodised aluminium
Complete with fixing set:
Aluminium



Size 150 and 197



Size 152

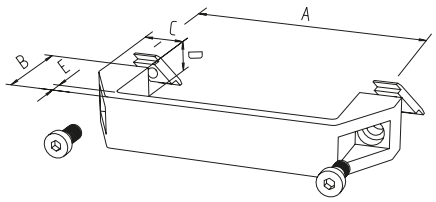

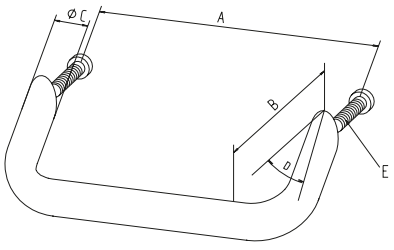

[mm]

Code No.	Size	Slot geometry	A	B	C	D	E
4005596	152	Drill	128	50	20	35°	M6x30
4015598	152	Drill	128	50	20	35°	M6x40
4008596	150	30	132	44	21	27	7
4015596	150	40	132	44	21	27	7
4015597	197	40	179	50	22	28	7

Handle profile

- The elegant handle profile is supplied as bar material and can be cut to length as required. The customer must drill the fixing holes.

Material: Aluminium



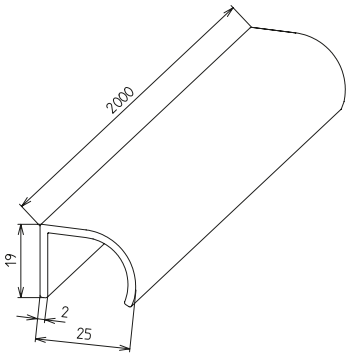

Code No.	Type
4015595	Handle profile, 2000 mm bar

Handle/Handrail

- This handle/handrail can be retrospectively fixed to the profile slot using slot stone -R-. An anodised aluminium tube, available to cut to length or as bars, serves as the grip surface. For tube lengths above 1000 mm, a central mounting bracket is recommended.

Material:
Black plastic mounting brackets, galvanised fastenings.
Aluminium tube



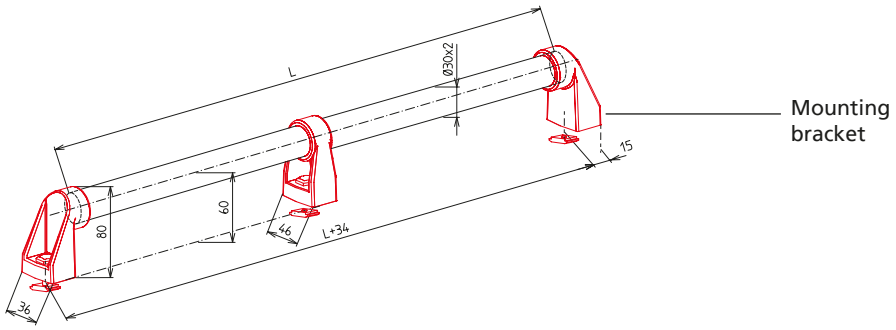

Central mounting bracket recommended as of L>1000 mm

Code No.	To slot geometry	Type
4018501	40	2x mounting brackets, L<1000 mm
4018502	40	2x mounting brackets, 1x central mounting bracket, L>1000 mm

Code No.	Type
823020 2 0500	Aluminium tube, Ø30x2 L=500 mm
823020 2 1000	Aluminium tube, Ø30x2 L=1000 mm
823020 2 2000	Aluminium tube, Ø30x2 L=2000 mm
823020 2 _ _ _ _	Cut to length aluminium tube Ø30x2, Lmax= 6000 mm

Length [mm]

Fittings

Safety switch AZ 15zvr

- For safely switching off circuits
- Suitable for hinged, flap, sliding and lifting doors
- **Technical data:**
  Self-extinguishing, fibreglass reinforced thermoplastic

Actuator key:
Stainless spring steel
Degree of protection:
IP67 to IEC 529/EN 60529/DIN VDE 0470-1
Contact material: Fine silver
Contact type: One-pin, double-breaking, positively driven NC to VDE 001
Pivot radius: R_{min} 450 mm
Rated isolation voltage:
VI 500 V approx. 25-60 Hz.
Constant current: 10 A
Rated operating current Iu AC 11h
4 A (230V), 2.5 A (380 V),
1A (500 W)
Short circuit resistance:
10 A (slow) 16 A (fast).
Contact gap 2 x 3 mm.
Positive opening travel/force:
8 mm / approx. 30 N
Mech. lifetime:
$10x10^6$ switching cycles
Operating temperature:
-30 to +80°C.



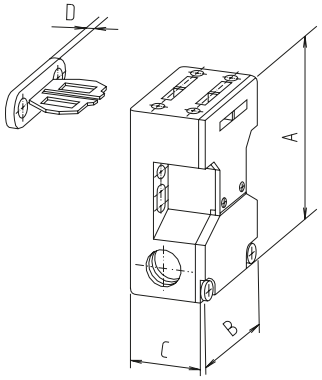

[mm]

Code No.	Type	A	B	C	D
4010610	AZ 15 zvr for sliding door / lifting door	72	52	30	5
4010613	AZ 15 zvr for sliding door	72	52	30	5
4010614	AZ 15 zvr for flap door	72	52	30	5
4015610	Fixing set for sliding door, hinged door		Fig. 1, 2, 3	40 slot geometry	
4015602	Fixing set for lifting door		Fig. 4		

Further fixing sets available on request

Fixing set for sliding and hinged door. Vibration finished aluminium.
See fig. 1-3 on the next page.

Fixing set for lifting door
See fig. 4 on the next page.

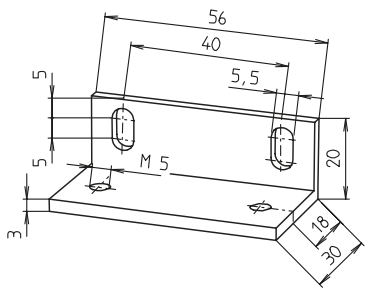

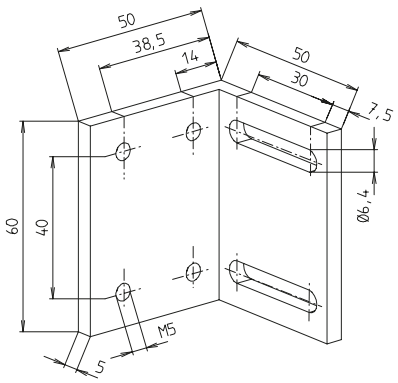

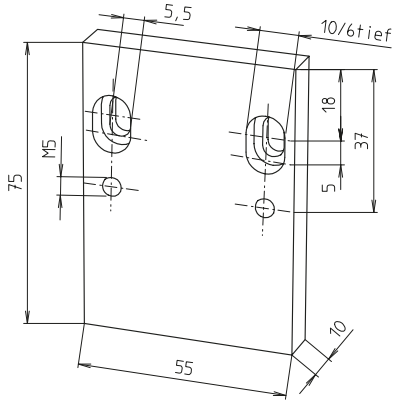

Fig. 1: Hinged door
Fixing AZ 15 zvr to the top strut (40-40)

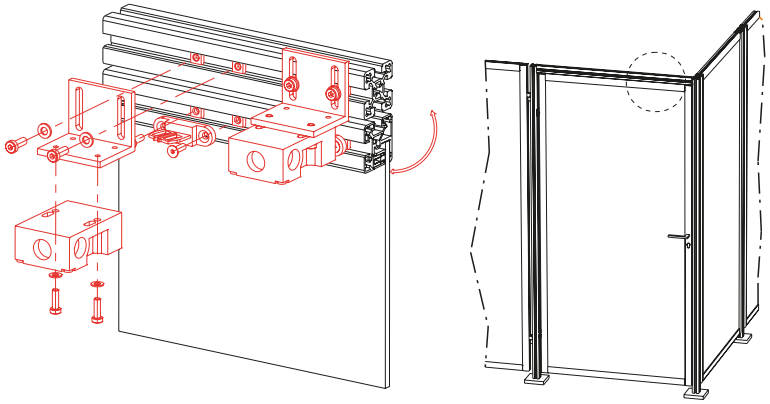

Fig. 2: Hinged door
Fixing AZ 15 zvr to the side strut (40-50)

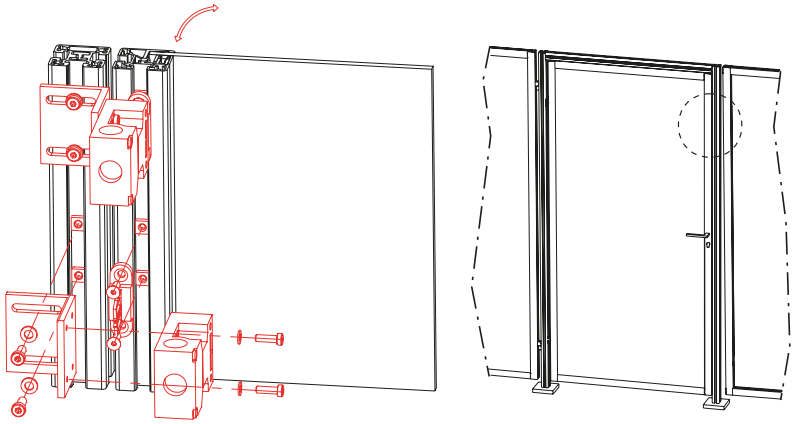

Fig. 3: Sliding door
Fixing AZ 15 zvr to the side strut (50-40)

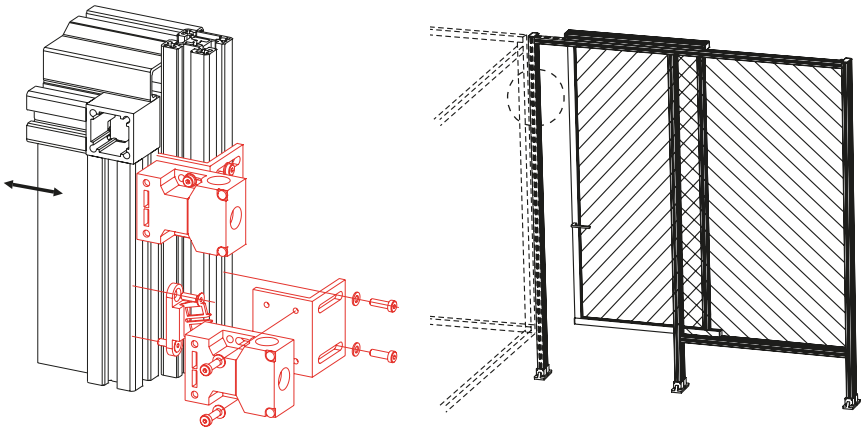

Fig. 4: Lifting door
Fixing AZ 15 zvr to the cross strut (40-40)

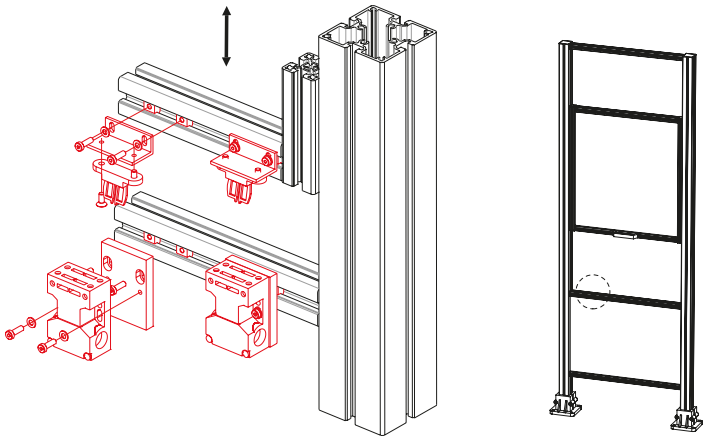

Fittings

Safety switch AZM 161

- For safely switching off circuits. Suitable for hinged, sliding and lifting doors.



Technical data:
Self-extinguishing fibreglass-reinforced thermoplastic.
Degree of protection: IP67 to IEC 529/EN 60529/DIN VDE 0470-1
Contact type: One-pin, double-breaking, positively driven NC to VDE 001, additional contacts for signal purposes
Pivot radius: R_{min} 900 mm

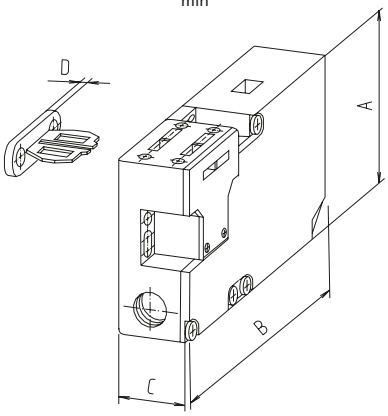

Constant current: 10 A Rated operating current Iu AC 11h 2 A (230 V)
Short circuit resistance:
6 A (slow) as positively driven NC position switch
Contact type: One-pin, double-breaking, positively driven NC to VDE 001, additional contacts for signal purposes
Pivot radius: R_{min} 900 mm
Constant current: 10 A Rated operating current Iu AC 11h 2 A (230 V)
Short circuit resistance:
6 A (slow) as positively driven NC position switch
Positive opening travel/force:
8.8 mm / 10 N
Locking force Fmax: 2000 N
Mech. lifetime:
>10x10^6 switching cycles
Operating temperature:
-25 to +60°C.

Code No.	Type	A	B	C	D
4010650	Switch AZM 161, for sliding door/lifting door/hinged door	90	130	30	5

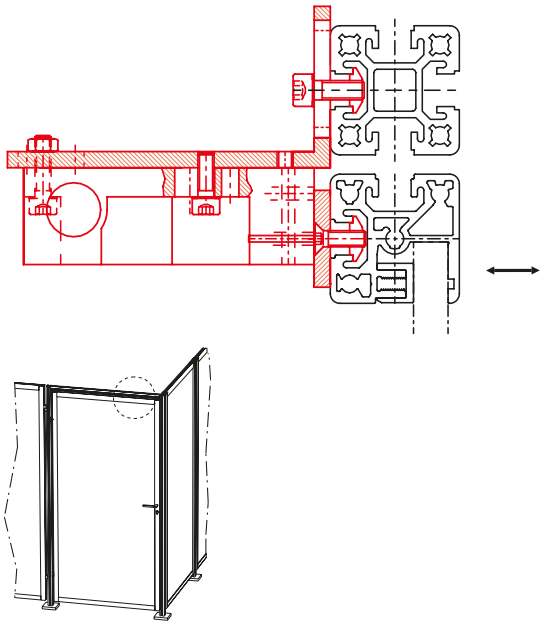

Fig.1: Hinged door
Fixing AZM 161 to the top strut (40-40)

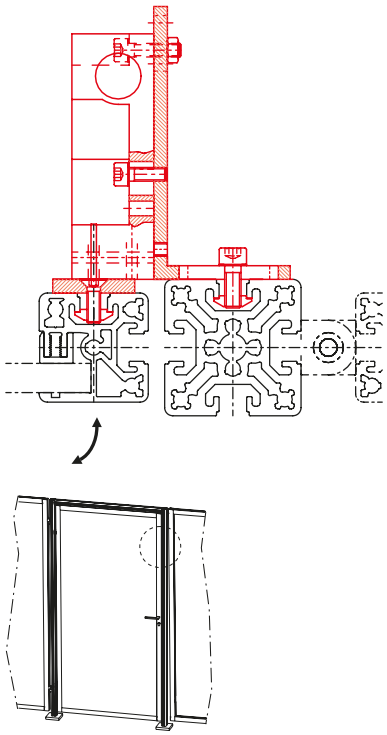

Fig. 2: Hinged door
Fixing AZM 161 to the side strut (40-50)

Fittings

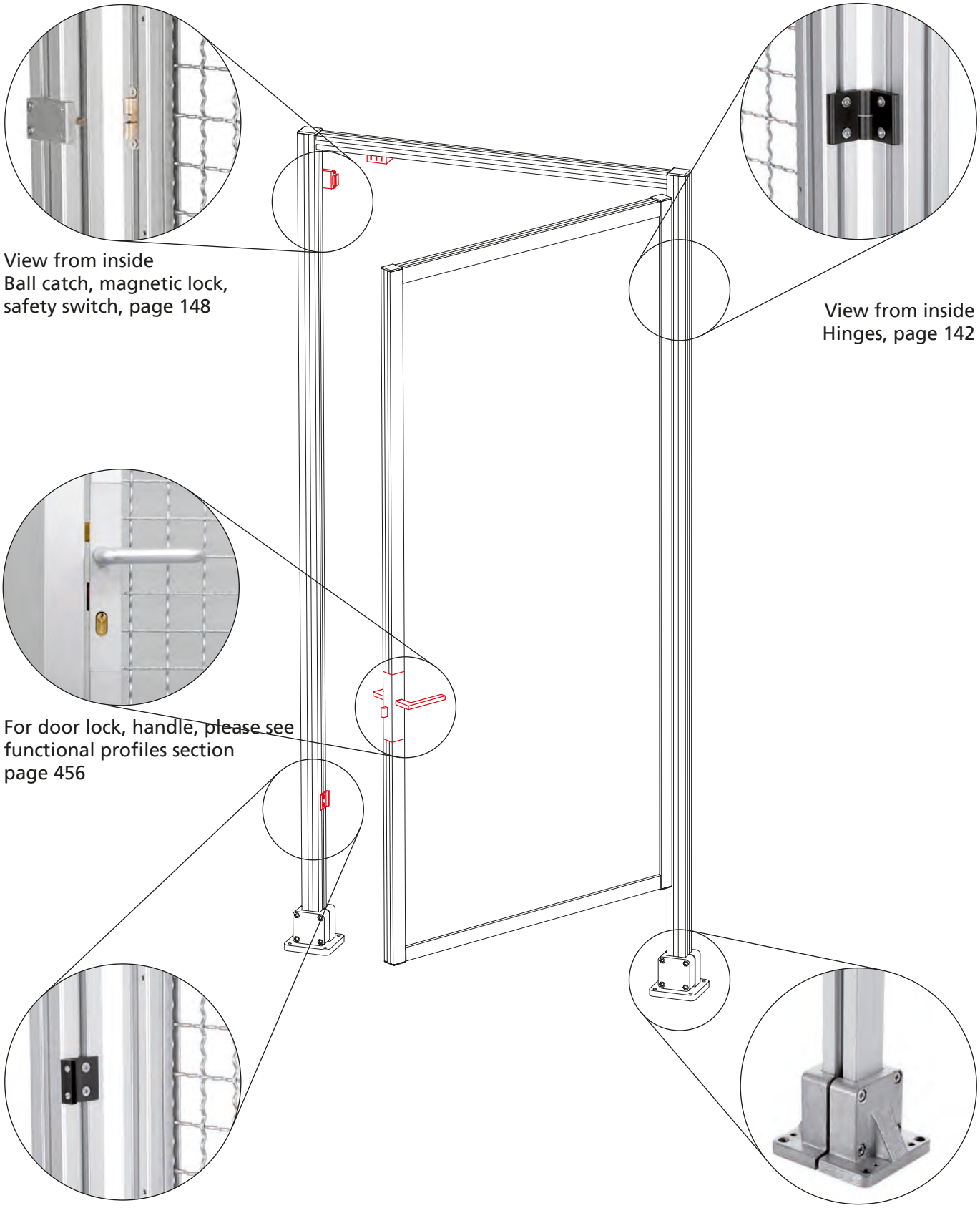

View from inside
Ball catch, magnetic lock, safety switch, page 148

View from inside
Hinges, page 142

For door lock, handle, please see functional profiles section page 456

View from inside
Door stopper, page 154

Base clamp, page 134

Conveying elements and pneumatics

Versions

Conveying elements



Conveyor rollers



Conveyor drums



Sliding piece

Pneumatics



Pneumatic connection



Pneumatic connecting plate

Table of contents

Conveying elements

Conveyor rollers ..... p. 162

Conveyor drums ..... p. 162

Sliding piece ..... p. 163

Pneumatics

Pneumatic connection ..... p. 164

Pneumatic connecting plate ..... p. 165

Conveying elements

Conveyor rollers



Type O. 38



Type M. 38

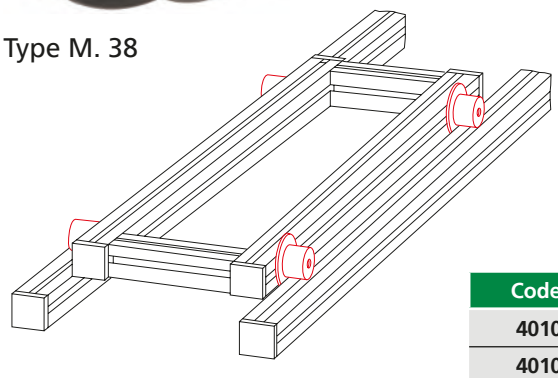

- Version with or without flange. The rollers can be fixed to the longitudinal profile slots without any difficulty. For assembling carriages or conveyor belts.

Material:
Plastic with ball bearing.

Includes: Complete with fixing set.

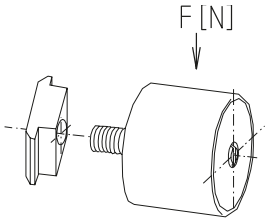

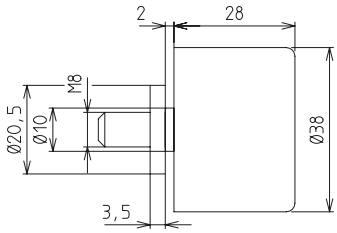

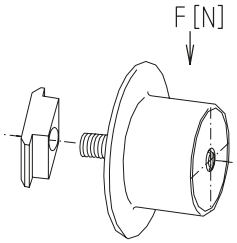

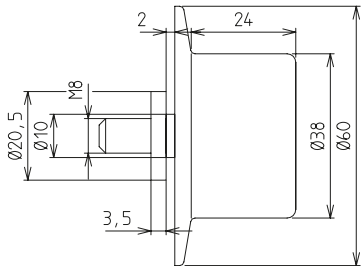

Code No.	Type	Slot geometry	F [N]
4010640	O. 38	40	100
4010641	M. 38	40	100

Conveyor drums



- Standard length 500 mm. Other lengths available on request.

Material: Plastic with plastic ball bearings.

Includes:
Complete with fixing set.

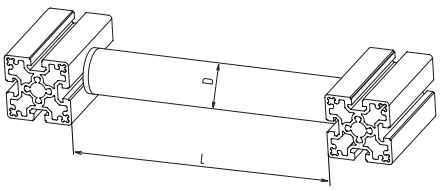

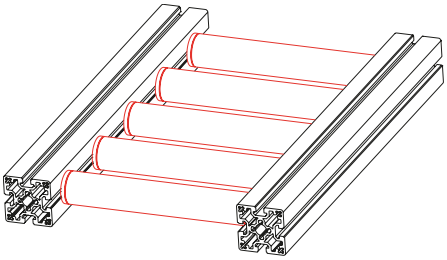

[mm]

Code No.	Type	D	L	Slot geometry	F [N] in relation to 500 mm
4018641	40	40	500	40	100
4018640	50	50	500	40	150

Sliding piece

- For easy, low-wear moving of parts in a profile frame (sliding doors, lifting doors).
- A "centred" and an "off-centred" version are available. The sliding piece is available ready to install including set screws and as bars.

Material: Black plastic

Includes:
See table/version





Fig. 1

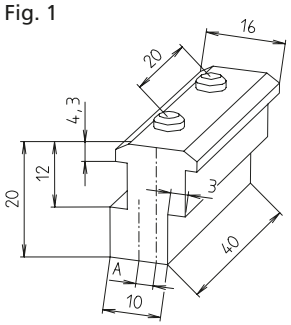

Fig. 2

Set screw

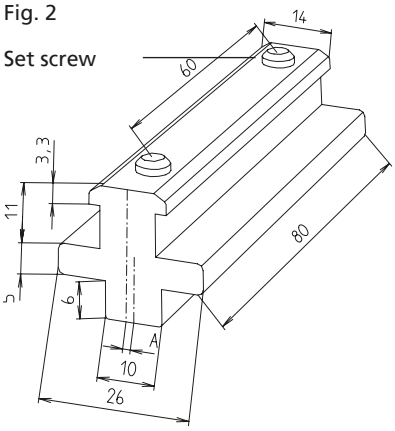

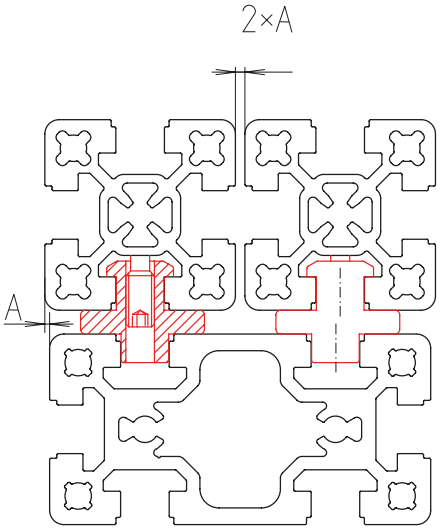

[mm]

Code No.	Type	Version	Fig.	A
4018644	Centred sliding piece	Complete, 40 slot geometry	2	0
4018645	Centred sliding piece	2000 mm bar	2	0
4018646	Off-centred 1 mm sliding piece	Complete, 40 slot geometry	1	1
4018647	Off-centred 1 mm sliding piece profile	2000 mm bar	1	1
4018648	Off-centred 3 mm sliding piece	Complete, 40 slot geometry	1	3
4019236	Set screw M6x18 DIN 913	Corrosion-resistant		

Pneumatics

Pneumatic connection



Assembly: Mark the desired position with the aid of the template (see page 482) and drill a hole with a 4 mm drill (1). Place the O ring (2) on the bore hole (6) and then push the slot stone (3) in the slot from the side, directly onto the bore hole. Then hand-tighten the screw in the slot stone (3) and lock it with the nut (5) and washer (4).

Material:
Galvanised steel slot stone, brass screw connection.
Connecting option in the slot of coupling sockets, plugs or screw connections.

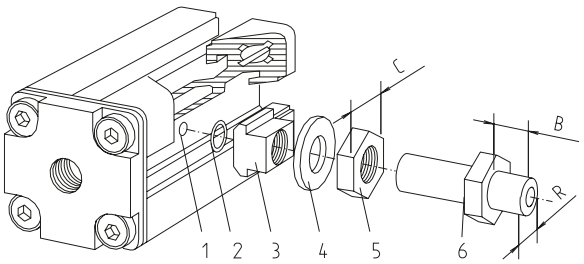

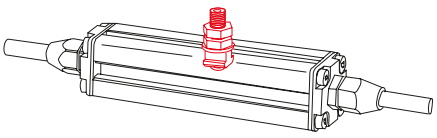

[mm]

Code No.	Connection	R	B	C
4010415	R1/8"	R1/8"	12	17
4010416	With hose coupling - automatic stop			

Pneumatic connecting plate

- Connection to the front profile surfaces, for compressed air supply or consumer systems.

Material: Die-cast aluminium

Includes: Complete with seal and screws.
Fixing: Galvanised steel



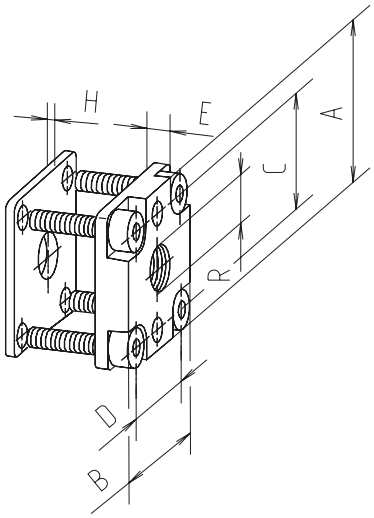



[mm]

Code No.	Type	Connection	A	B	C	D	E	R	H
4044411	80x80, F-80x80-L	R1/4"	80	80	68	68	8	R1/4"	2
4044412	80x80, F-80x80-L	R1/2"	80	80	68	68	8	R1/2"	2

Cable channel system

Versions



Profiles



Spring strips



Channel assembly clip



Cover plate



End cover for cable outlet



Grommet for cable outlet



Membrane grommet for cable outlet



Cable tie base



Separating strip



Assembly strip



Edge protection



Equipotential bonding



Self tapping screw

Table of contents

Cable channel system

Funktionality/Assembly/Routing ..... p. 168
Profiles ..... p. 169
Spring strips ..... p. 170
Channel assembly clip ..... p. 170
Cover plate ..... p. 170
End cover for cable outlet ..... p. 170
Grommet for cable outlet..... p. 170
Membrane grommet for cable outlet..... p. 170
Cable zie base..... p. 171
Separating strip..... p. 171
Assembly strip..... p. 171
Edge protection..... p. 171
Equipotential bonding..... p. 171
Self tapping screws ..... p. 171

Cable channel system

Channel functionality

- Aluminium cable channel in sizes 40x40, 40x80 and 80x40
- Smooth and scratch-resistant easy to clean anodised surface

Easy to open / excellent accessibility

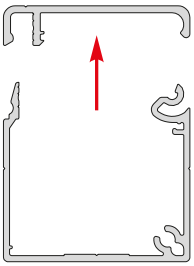

Lift cover to open

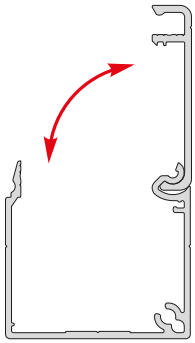

or pivot open

Arrangement in channel with optional separating strips

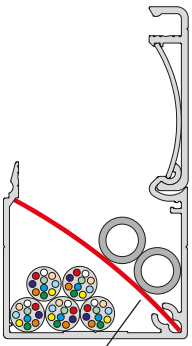

Separating strip

Assembling the channel

Easy assembly (without machining) with BLOCAN profiles

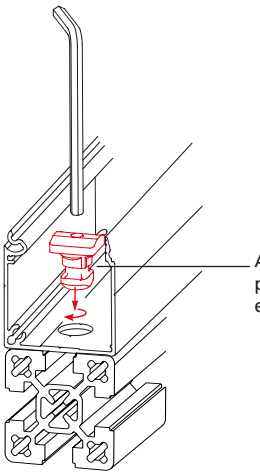

As required Ø12 pre-punched (approx. every 200 mm)

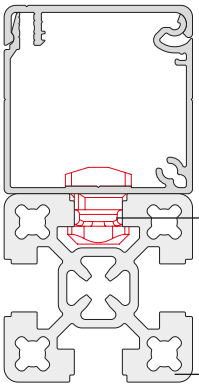

Assembly clip

BLOCAN profile

Equipotential bonding

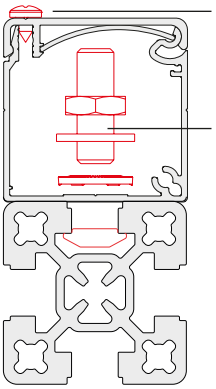

Creation of an electrically conducting connection using a self-tapping screw is possible.

Equipotential bonding kit available as an accessory

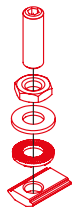

Cable arrangement

Insertable spring strips hold the cover in position

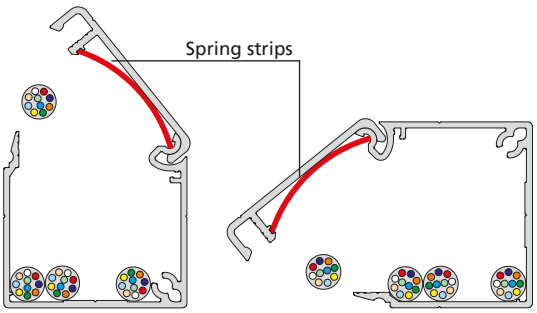

Spring strips

Assembly strips facilitate overhead assembly

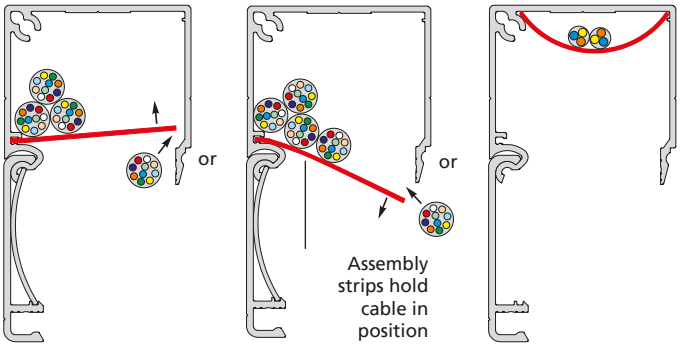

or

or

Assembly strips hold cable in position

Cable channel profiles

Profil KK-40x20

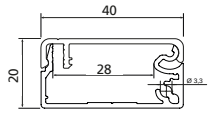

Code No.	Profile	Type	Weight
4F55A01	KK-40x20, 6 m bar	With fixing holes	0,609 kg/m
4F55A00	KK-40x20, cut to size		
4F55001	KK-40x20, 6 m bar	Without fixing holes	0,611 kg/m
4F55000	KK-40x20, cut to size		

Profile KK-40x40

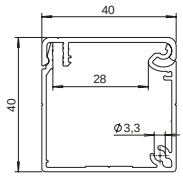

Code No.	Profile	Type	Weight
4E15A01	KK-40x40, 6 m bar	With fixing holes	0.745 kg/m
4E15A00	KK-40x40, cut to size		
4E15001	KK-40x40, 6 m bar	Without fixing holes	0.747 kg/m
4E15000	KK-40x40 cut to size		

Profile KK-40x80

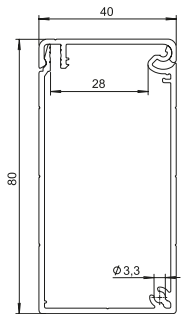

Code No.	Profile	Type	Weight
4E35A01	KK-40x80, 6 m bar	With fixing holes	1.152 kg/m
4E35A00	KK-40x80, cut to size		
4E35001	KK-40x80, 6 m bar	Without fixing holes	1.155 kg/m
4E35000	KK-40x80 cut to size		

Profile KK-80x40

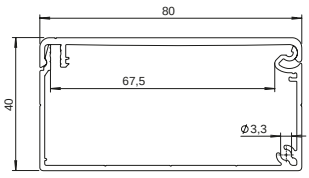

Code No.	Profile	Type	Weight
4E25A01	KK-80x40, 6 m bar	With fixing holes	1.290 kg/m
4E25A00	KK-80x40, cut to size		
4E25001	KK-80x40, 6 m bar	Without fixing holes	1.292 kg/m
4E25000	KK-80x40 cut to size		

Profile KK-80x80

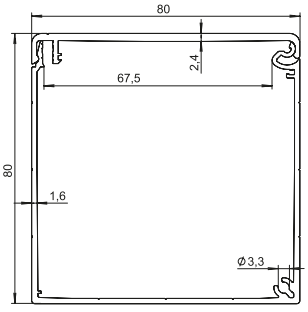

Code No.	Profile	Type	Weight
4F15A01	KK-80x80, 6 m bar	With fixing holes	1.690 kg/m
4F15A00	KK-80x80, cut to size		
4F15001	KK-80x80, 6 m bar	Without fixing holes	1.693 kg/m
4F15000	KK-80x80 cut to size		

Cable channel system

Order instruction:

- Purchase only in lot sizes and a multiple of that see product table below



Spring strips hold the cover open in any position



Quick and easy assembly with a fixing clip

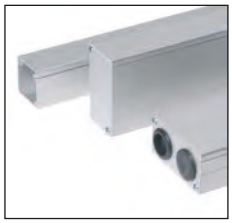

Cover plates and outlets as required

Spring strips for cover



Code No.	Type	lot sizes	Material
4E185041	KK 40x20, KK 40x40 KK 40x80	10, 20, 30... pcs	Plastic
4E285011	KK 80x40 KK 80x80	10, 20, 30... pcs	Plastic

Cable assembly clip



Code No.	Type	lot sizes	Material
4E185031	all	10, 20, 30... pcs	Plastic

Cover plate



Code No.	Type	lot sizes	Material
4F555011	KK 40x20	6, 12, 18... pcs	Aluminium
4E155011	KK 40x40	6, 12, 18... pcs	
4E255011	KK 40x80, KK 80x40	6, 12, 18... pcs	
4F155011	KK 80x80	6, 12, 18... pcs	

End cover for cable outlet



Code No.	Type	lot sizes	Material
4E155021	KK 40x40	6, 12, 18... pcs	Aluminium
4E255021	KK 40x80, KK 80x40	6, 12, 18... pcs	
4F155021	KK 80x80	6, 12, 18... pcs	

Grommet for cable outlet



Code No.	Type	lot sizes	Material
4E185051	Outlet Ø 22mm	6, 12, 18... pcs	Z-PVC

Membrane grommet for cable outlet



Code No.	Type	lot sizes	Material
4E185021	40x40 , 40x80, 80x40, 80x80	6, 12, 18... pcs	Plastic



Leads can be separated with press-fit separating strips...

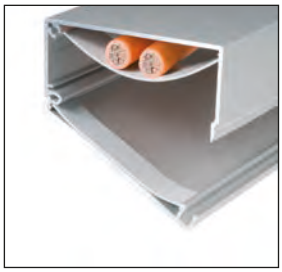

...or make overhead work easier.



Edge protection for inlets or outlets

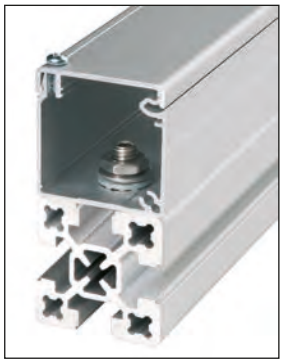

Standard components make equipotential bonding easy

Cable tie base *



Code No.	Type	lot sizes	Material
4F185021	all	10, 20, 30... pcs	Plastic

* May be used with channel assembly clip.

Separating strip



Code No.	Type	lot sizes	Material
4E185061	KK 40x40	10, 20, 30... pcs	Plastic
4E285021	KK 40x80, KK 80x40	10, 20, 30... pcs	
4F185011	KK 80x80	10, 20, 30... pcs	

Assembly strip



Code No.	Type	lot sizes	Material
4E185071	KK 40x20, KK 40x40, KK 40x80	10, 20, 30... pcs	Plastic
4E285031	KK 80x40	10, 20, 30... pcs	

Edge protection



Code No.	Type	Material
4E18501	1 unit per 1 m	Plastic

Equipotential bonding



Code No.	Type	lot sizes
4E16502	screw, slot stone, washers	–
4E165031	contact washer	100, 200, 300... pcs

Self tapping screw



Code No.	Type	lot sizes
4E165011	ISO 7049 St. 3.5 x 9.5, Form f	10, 20, 30... pcs

Application examples









Added visual and functional value

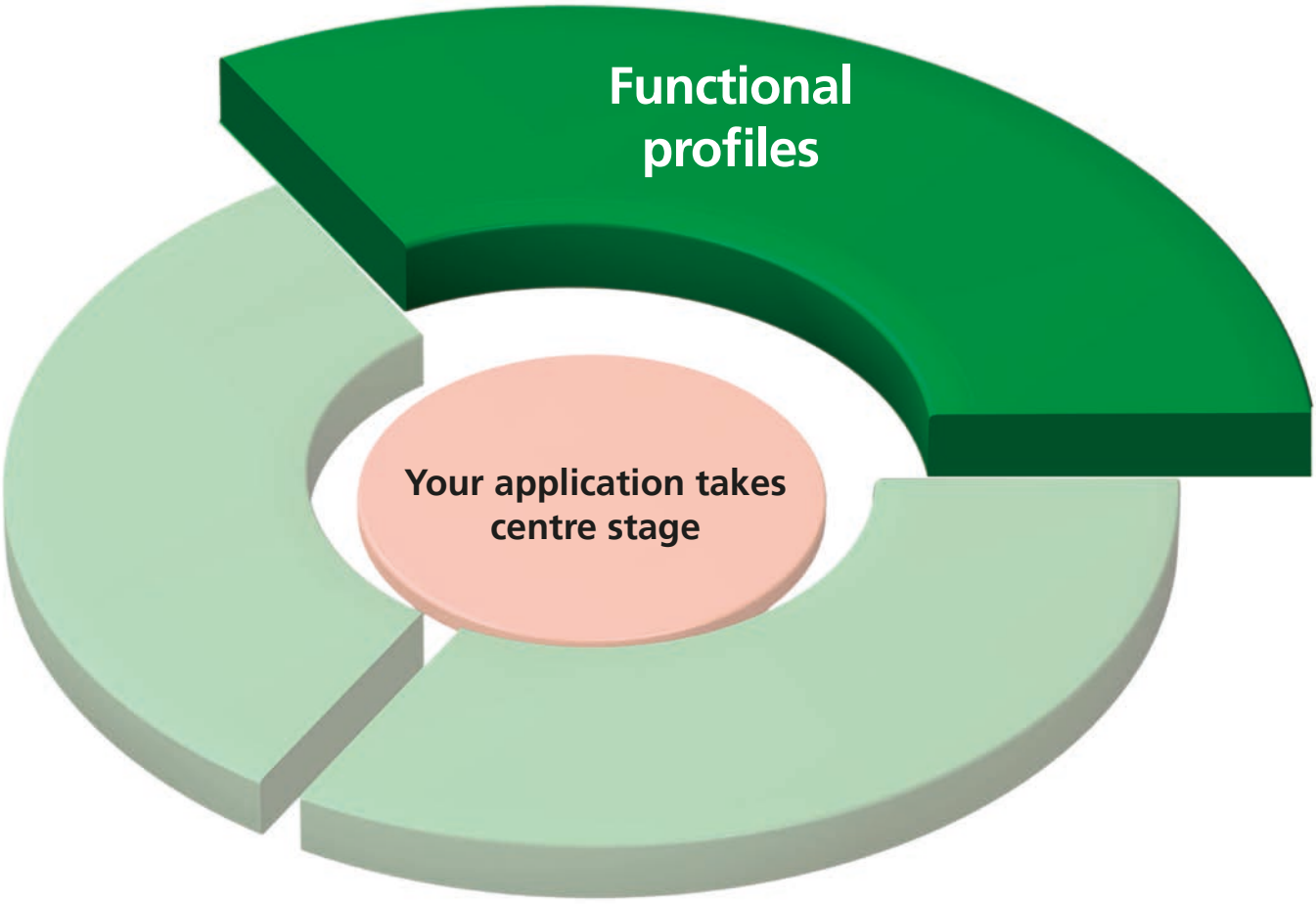

Features:

- Attractive design
- Many functions
- Flexible

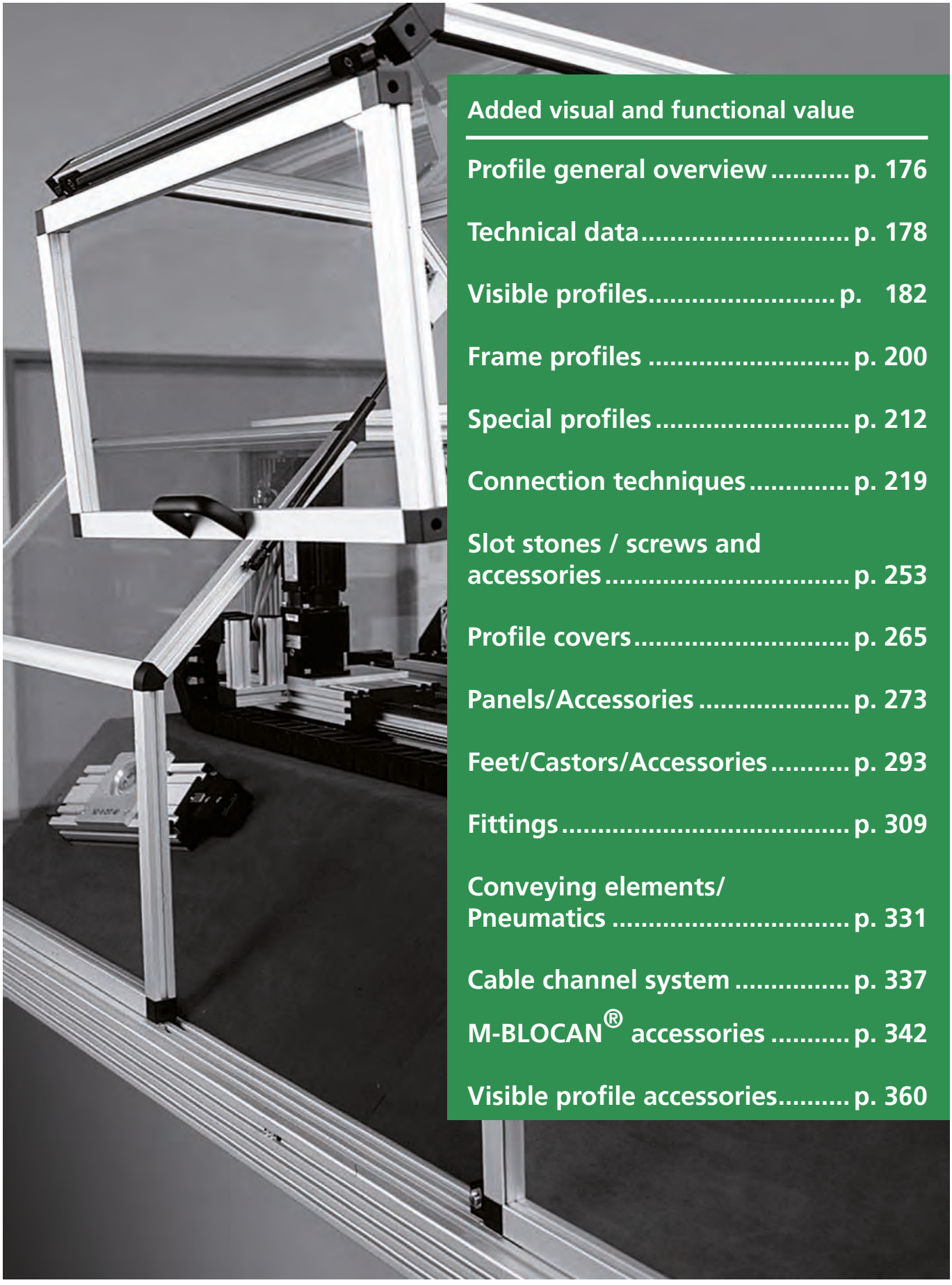

Added visual and functional value

Profile general overview ..... p. 176

Technical data ..... p. 178

Visible profiles ..... p. 182

Frame profiles ..... p. 200

Special profiles ..... p. 212

Connection techniques ..... p. 219

Slot stones / screws and accessories ..... p. 253

Profile covers ..... p. 265

Panels/Accessories ..... p. 273

Feet/Castors/Accessories ..... p. 293

Fittings ..... p. 309

Conveying elements/ Pneumatics ..... p. 331

Cable channel system ..... p. 337

M-BLOCAN® accessories ..... p. 342

Visible profile accessories ..... p. 360

Functional profile overview

Visible profiles Sizes

30



F-G 30x30 p. 182 | F-GG 30x30 p. 182 | F-2G 30x30 p. 183 | F-3G 30x30 p. 183 | W 30-30 p. 184 | W 30-45 p. 184 | W 30-60 p. 184 | W 30-90 p. 185 | F-R 30 p. 185

40

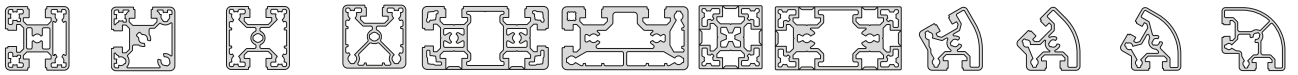

F-G 40x40 p. 186 | F-GG 40x40 p. 186 | F-2G 40x40 p. 187 | F-3G 40x40 p. 187 | F-G 40x80 p. 188 | F-GG 40x80 p. 188 | G-40x40 p. 189 | G-40x80 p. 189 | W 40-30 p. 190 | W 40-45 p. 190 | W 40-60 p. 191 | W 40-90 p. 191

50

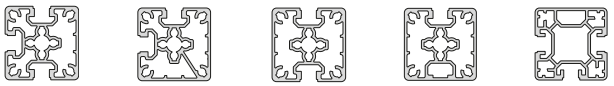

F-G 50x50 p. 192 | F-GG 50x50 p. 192 | F-2G 50x50 p. 193 | F-3G 50x50 p. 193 | SP-50x50 p. 194

60

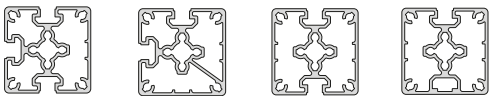

F-G 60x60 p. 196 | F-GG 60x60 p. 196 | F-2G 60x60 p. 197 | F-3G 60x60 p. 197

80

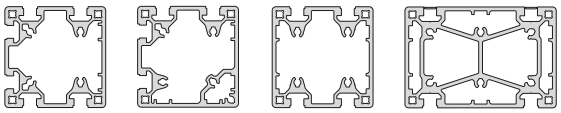

F-G 80x80 p. 198 | F-GG 80x80 p. 198 | F-2G 80x80 p. 199 | F-3G 80x120A p. 199

Frame profiles Sizes

30



KL 30x30-3 p. 200 | KLD 30x40 p. 201 | KLE-30x30 p. 202 | KLW 30x15 p. 202 | KLW 30x30 p. 203 | KLW 30x45 p. 203 | KLW 30x60 p. 204 | KLW 30x90 p. 204 | ESP 30 p. 205 | ESP 30/2 p. 205 | STP 30 p. 206

40



KL 40x40-3 p. 206 | KLD 40x40 p. 207 | KLE 40x40 p. 207 | KLW 40x15 p. 208 | KLW 40x45 p. 209 | KLW 40x60 p. 209 | KLW 40x90 p. 210 | ESP 40 p. 210 | ESP 40/2 p. 211 | STP 40 p. 217

Special profiles Sizes

15

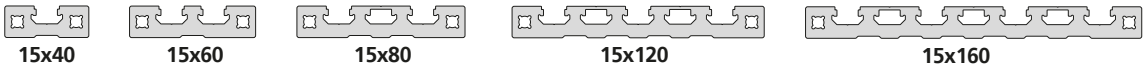

15x40 p. 212 | 15x60 p. 212 | 15x80 p. 212 | 15x120 p. 213 | 15x160 p. 213

20 M-BLOCAN®



F-20x20 p. 214 | F-20x40 p. 214 | F-R 20 p. 214 | F-G 20x20 p. 215 | F-GG 20x20 p. 215 | KL 20x20 p. 216 | KLD 20x20 p. 216 | KLE 20x20 p. 216

40

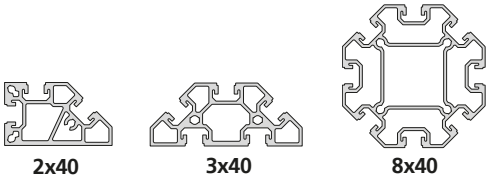

2x40 p. 217 | 3x40 p. 217 | 8x40 p. 217

Table of contents

RK ROSE+KRIEGER

Profiles

Overview ..... p. 176
Slot geometry ..... p. 178
Load data ..... p. 179
Visible profiles ..... p. 182
Frame profiles p.200
Special profiles ..... p. 212

Connection techniques

Right-angle connections ..... p. 219 - 238
Cross connections ..... p. 240 - 243
Angle connections ..... p. 244 - 250

Accessories

Slot stones, screws ..... p. 253 - 263
Profile covers ..... p. 265 - 270
Panels ..... p. 273 - 290
Feet, castors ..... p. 293 - 306
Fittings ..... p. 309 - 319
Conveying elements ..... p. 331 - 334
Pneumatics ..... p. 335
Cabel channel system ..... p. 336 - 341

M-BLOCAN®
(size 20 profiles)

Flange bracket connection ..... p. 344
Flange bracket adapter ..... p. 345
Corner joint R/GG ..... p. 346
Profile angle bracket ..... p. 350
Angle brackets ..... p. 351
Mitre joint -transversal- ..... p. 352
Slot stone -B-/PLM ..... p. 353
Screws ..... p. 353
Profile joint ..... p. 354
Handle ..... p. 354

Technical data functional profiles

Slot geometry

20 slot geometry
For use with all size 20 profiles

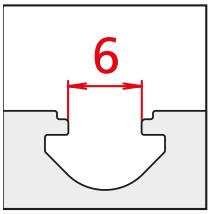

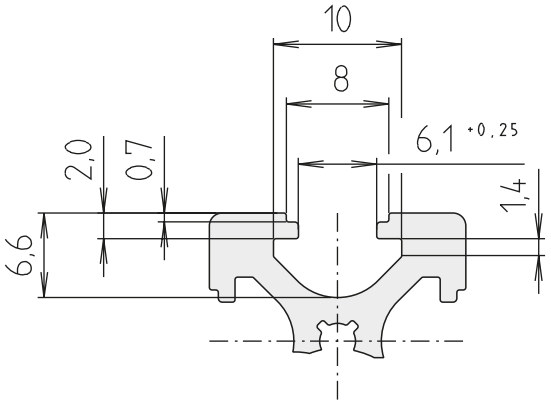

30 slot geometry
For all profiles up to size 30

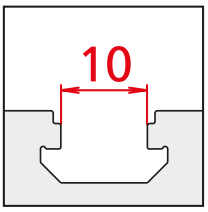

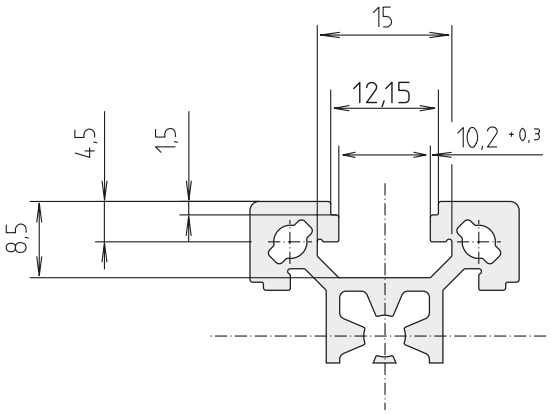

40 slot geometry
This geometry is found with all profiles as of size 40

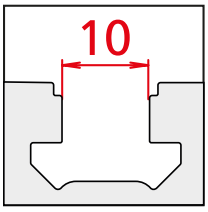

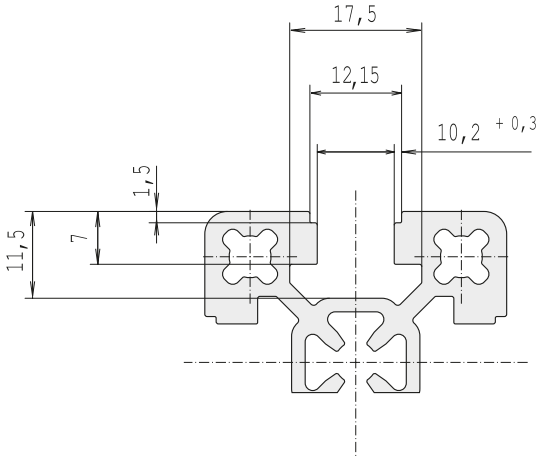

Load data

Moment of inertia: I [cm⁴]

Moment of resistance: w [cm³]

Profile	Area	Ix [cm4]	Iy [cm4]	Wx [cm3]	Wy [cm3]	Weight	Page
Visible profiles							
F-G 30x30	318	3.2	3.2	2.1	2.1	858	182
F-GG 30x30	317	3.2	3.2	2.1	2.1	858	182
F-2G 30x30	335	3.2	3.6	2.2	2.4	905	183
F-3G 30x30	335	3.5	3.6	2.2	2.4	932	183
F-R 30	271	2.1	2.1	1.2	1.2	730	185
F-G 40x40	636	9.7	9.8	4.8	4.9	1718	186
F-GG 40x40	611	10.1	10.1	4.8	4.8	1651	186
F-2G 40x40	543	9.3	9.4	4.6	4.7	1466	187
F-3G 40x40	539	9.7	9.8	4.8	4.9	1455	187
F-G 40x80	1220	20.9	82.3	10.4	20.6	3295	188
F-GG 40x80	1323	22.0	87.9	10.7	22.0	3565	188
G-40x40	696	10.5	10.5	5.2	5.2	1877	189
G-40x80	1145	18.7	78.5	9.3	19.6	3106	189
W 40-30	619	10.0	10.0	3.7	4.2	1674	190
W 40-45	620	9.7	9.8	3.4	4.2	1675	190
W 40-60	671	11.2	12.8	4.2	4.6	1812	191
W 40-90	797	22.0	22.0	7.4	7.4	2153	191
F-G 50x50	832	21.6	22.2	8.6	8.9	2247	192
F-GG 50x50	815	21.5	22.1	8.4	8.7	2200	192
F-2G 50x50	779	20.6	21.8	8.3	8.7	2103	193
F-3G 50x50	791	20.7	22.6	9.0	9.1	2137	193
SP-50x50	753	20.8	20.7	8.2	8.3	2033	194
F-G 60x60	1020	37.9	39.5	12.6	12.7	2757	196
F-GG 60x60	1001	38.1	39.0	12.5	12.8	2701	196
F-2G 60x60	956	36.2	39.1	12.1	13.0	2585	197
F-3G 60x60	981	36.5	41.2	11.9	13.7	2649	197
F-G 80x80	1710	135.5	139.3	34.8	33.0	4557	198
F-GG 80x80	1686			34.1	34.1	4497	198
F-2G 80x80	1656	133.4	140.1	33.3	35.0	4471	199
F-3G 80x120A	2896	213.3	467.8	52.8	77.9	7818	199

Technical data functional profiles

Load data

Moment of inertia: I [cm^4]

Moment of resistance: w [cm^3]

Profile	Area	Ix [cm4]	Iy [cm4]	Wx [cm3]	Wy [cm3]	Weight	Page
Frame profiles							
KL 30x30-3	293	2.3	2.7	1.5	1.8	917	200
KLD 30x40	436	5,5	3,8	2,7	2.5	1426	199
KLE 30x30	348	3.0	3.0	2.0	2.0	1179	202
KLW 30-15	405	3.3	2.5	1.4	1.9	853	202
KLW 30-30	641	9.7	7.4	3.1	4.4	852	203
KLW 30-45	405	3.3	2.4	1.2	1.8	845	203
KLW 30-60	357	3.3	3.5	1.7	1.5	966	204
KLW 30-90	640	9.7	7.2	2.7	4.1	1051	204
ESP 30x30	275	2.3	2.8	1.4	1.8	742	205
ESP 40x40/2	457	6.3	7.7	3.0	3.6	1234	211
STP 30	536	5.2	22.8	6.1	3.7	1448	206
KL 40x40-3	508	7.0	8.3	3.5	4.1	1596	206
KLD 40x40	612	10.0	8.3	4.1	5.5	1975	207
KLE 40x40	590	9.3	9.3	4.6	4.6	1914	207
KLW 40-15	402	3.1	2.4	1.1	1.7	1408	208
KLW 40-45	478	5.3	5.3	2.4	2.4	1764	209
KLW 40-60	572	9.6	10.7	3.8	3.3	1545	209
KLW 40-90	774	17.3	17.3	5.8	5.8	1767	210
ESP 40x40	405	6.1	7.3	2.7	3.5	1095	210
ESP 40x40/2	457	6.3	7.7	3.0	3.6	1234	211
STP 40	815	12.5	46.5	9.7	6.1	2199	211

Load data

Moment of inertia: I [cm⁴]

Moment of resistance: w [cm³]

Profile	Area	Ix [cm4]	Iy [cm4]	Wx [cm3]	Wy [cm3]	Weight	Page
Special profiles							
15x40	421	0.8	6.6	1.3	3.3	1137	212
15x60	619	1.2	21.0	1.9	7.0	1670	212
15x80	823	1.7	47.8	2.5	11.9	2220	212
15x120	1213	2.4	154.9	3.6	25.8	3270	213
15x160	1602	3.1	359.0	4.8	44.9	4320	213
F-20x20	198	0.8	0.8	0.8	0.8	533	214
F-20x40	313	1.3	5.4	1.3	2.7	846	214
F-R 20	155	0.5	0.5	0.6	0.5	416	214
F-G 20	182	0.7	0.8	0.8	0.7	491	215
F-GG 20	167	0.7	0.7	0.7	0.7	450	215
KL-20	183	0.7	0.7	0.8	0.8	493	216
KLD-20	186	0.7	0.7	0.7	0.8	500	216
KLE-20	171	0.7	0.7	0.6	0.7	462	216
2x40	838	32.8	14.2	7.9	11.3	2262	217
3x40	1019	68.2	14.8	8.8	14.1	2751	217
8x40	1700	133.4	133.4	27.6	27.6	4590	217

Visible profiles / size 30

Order instruction:

- Purchase only in lot sizes and a multiple of that see product table below

F-G 30x30



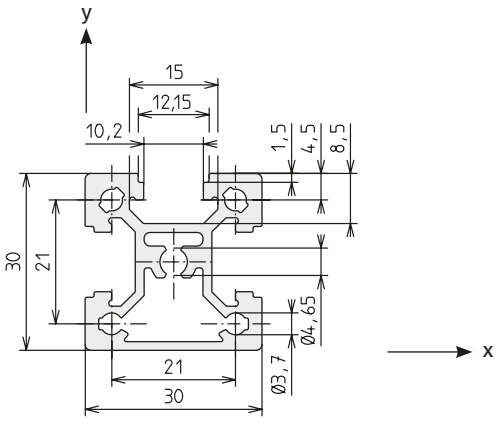

Area	318	mm²
I_x	3.2	cm⁴
I_y	3.2	cm⁴
W_x	2.1	cm³
W_y	2.1	cm³
Weight	858	g/m

Code No. Profile F-G 30x30			Anodised
4535000	Cut to size	max. 6000 mm	Clear
4535001	Bar	6000 mm	Clear

Connection	Slot geometry	Flange bracket	lot sizes	Code No.
Long	30	30	10, 20, 30... pcs	**4306709**
	40	30	10, 20, 30... pcs	**4306710**
Short	30	30 (K)	10, 20, 30... pcs	**4106702**
	40	30 (K)	10, 20, 30... pcs	**4106703**

F-GG 30x30



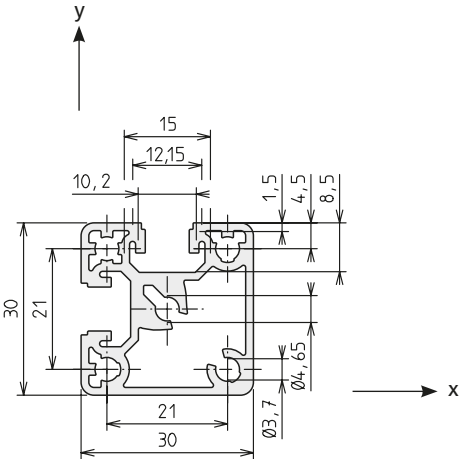

Area	317	mm²
I_x	3.2	cm⁴
I_y	3.2	cm⁴
W_x	2.1	cm³
W_y	2.1	cm³
Weight	858	g/m

Code No. Profile F-GG 30x30			Anodised
4555000	Cut to size	max. 6000 mm	Clear
4555001	Bar	6000 mm	Clear

Connection	Slot geometry	Flange bracket	lot sizes	Code No.
Short	30	30 (K)	10, 20, 30... pcs	**4106702**
	40	30 (K)	10, 20, 30... pcs	**4106703**

F-2G 30x30



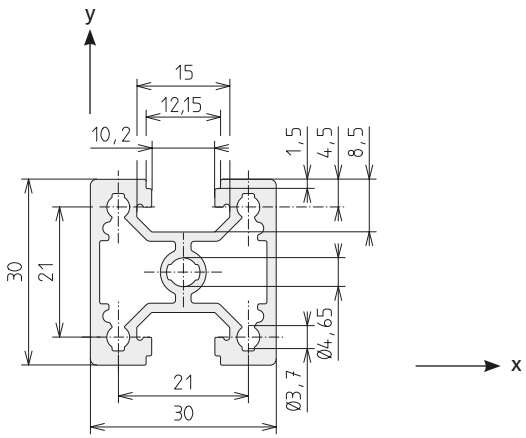

Code No. Profile F-2G 30x30			Anodised
4B45000	Cut to size	max. 6000 mm	Clear
4B45001	Bar	6000 mm	Clear

Area	335.3	mm²
I_x	3.2	cm⁴
I_y	3.6	cm⁴
W_x	2.2	cm³
W_y	2.4	cm³
Weight	905	g/m

Connec-tion	Slot geometry	Flange bracket	lot sizes	Code No.
Long	30	30	10, 20, 30... pcs	**4306709**
	40	30	10, 20, 30... pcs	**4306710**

F-3G 30x30



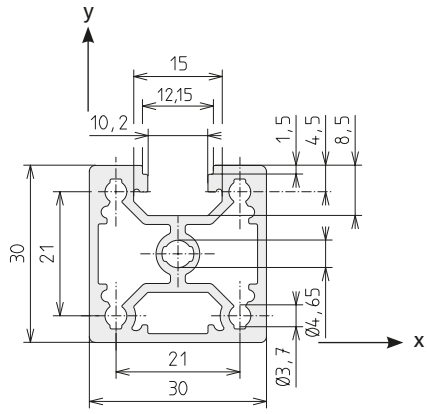

Code No. Profile F-3G 30x30			Anodised
4B55000	Cut to size	max. 6000 mm	Clear
4B55001	Bar	6000 mm	Clear

Area	335	mm²
I_x	3.5	cm⁴
I_y	3.6	cm⁴
W_x	2.2	cm³
W_y	2.4	cm³
Weight	932	g/m

Connection	Slot geometry	Flange bracket	lot sizes	Code No.
Short	30	30 (K)	10, 20, 30... pcs	**4106702**
	40	30 (K)	10, 20, 30... pcs	**4106703**

Visible profiles / size 30

W 30-30



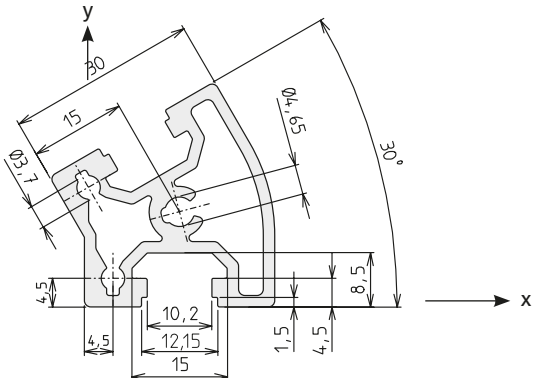

Area	342	mm²
I_x	3.0	cm⁴
I_y	3.4	cm⁴
W_x	1.5	cm³
W_y	1.8	cm³
Weight	924	g/m

Code No. Angle profile W 30-30			Anodised
4725000	Cut to size	max. 6000 mm	Clear
4725001	Bar	6000 mm	Clear

Code No. Corner joint	Type
4412406	KLW 30-30

W 30-45



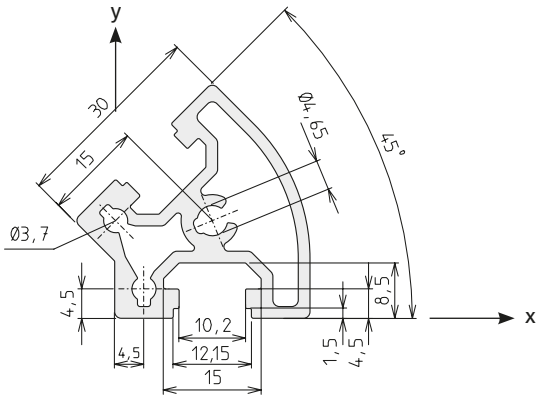

Area	340	mm²
I_x	3.0	cm⁴
I_y	3.2	cm⁴
W_x	1.4	cm³
W_y	1.7	cm³
Weight	919	g/m

Code No. Profile W 30-45			Anodised
4735000	Cut to size	max. 6000 mm	Clear
4735001	Bar	6000 mm	Clear

Code No. Corner joint	Type
4422406	KLW 30-45

W 30-60



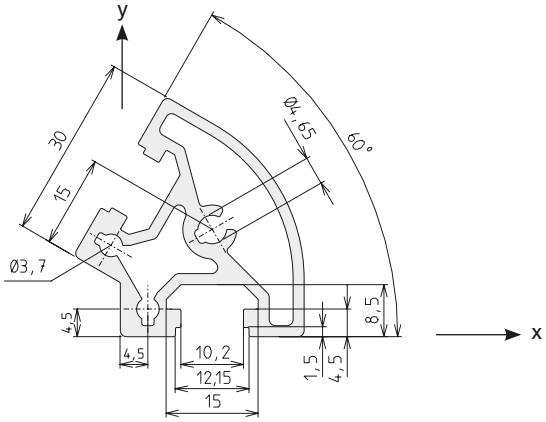

Area	375	mm²
I_x	3.4	cm⁴
I_y	4.3	cm⁴
W_x	1.8	cm³
W_y	1.9	cm³
Weight	1014	g/m

Code No. Angle profile W 30-60			Anodised
4745000	Cut to size	max. 6000 mm	Clear
4745001	Bar	6000 mm	Clear

Code No. Corner joint	Type
4622406	KLW 30-60

W 30-90



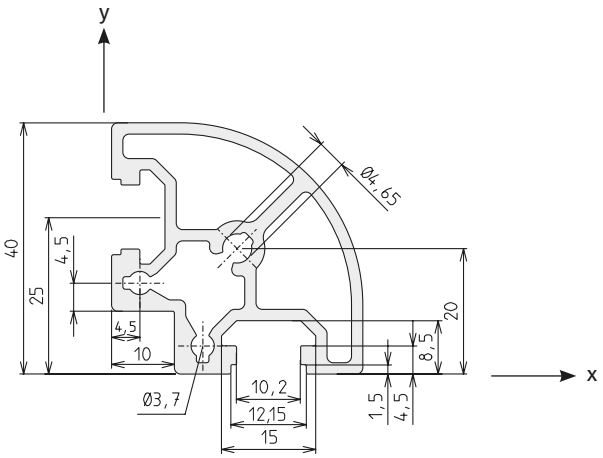

Area	435	mm²
I_x	6.2	cm⁴
I_y	6.2	cm⁴
W_x	2.9	cm³
W_y	2.9	cm³
Weight	1173	g/m

Code No. Angle profile W 30-90			Anodised
4755000	Cut to size	max. 6000 mm	Clear
4755001	Bar	6000 mm	Clear

Code No. Corner joint	Type
4432406	KLW 30-90

F-R 30



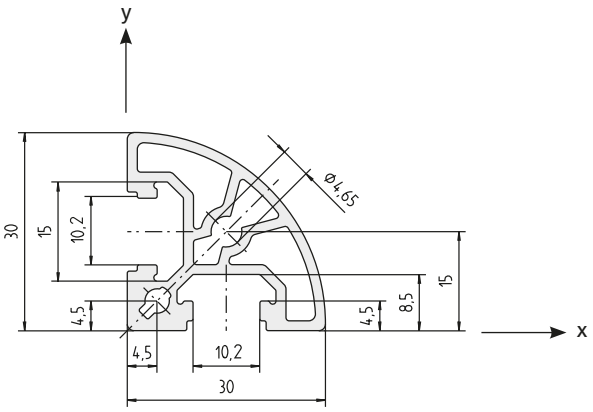

Area	271	mm²
I_x	2.1	cm⁴
I_y	2.1	cm⁴
W_x	1.2	cm³
W_y	1.2	cm³
Weight	730	g/m

Code No. Profile F-R 30			Anodised
4105000	Cut to size	max. 6000 mm	Clear
4105001	Bar	6000 mm	Clear

Connection	Flange bracket	Slot geometry	lot sizes	Code No.
long. + transverse	30 (K)	30	10, 20, 30... pcs	4106702

Visible profiles / size 40

Order instruction:

- Purchase only in lot sizes and a multiple of that see product table below

F-G 40x40



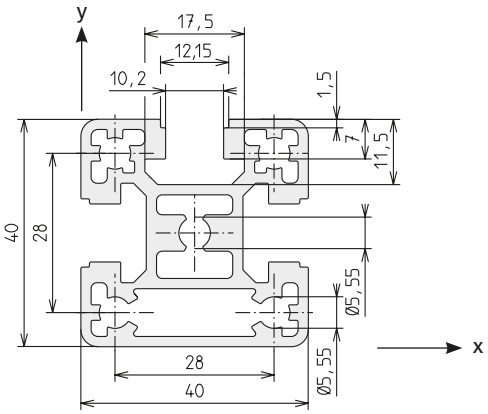

Code No. Profile F-G 40x40			Anodised
4545000	Cut to size	max. 6000 mm	Clear
4545001	Bar	6000 mm	Clear

Connection	Slot geometry	Flange bracket	lot sizes	Code No.
Long	30	40	10, 20, 30... pcs	**4816703**
	40			**4816702**
Short	30	40 (K)	10, 20, 30... pcs	**4566700**
	40			**4566701**
Flange slot stone -N-	40	40 (N)	–	**4546700**

Area	636	mm²
I_x	9.7	cm⁴
I_y	9.8	cm⁴
W_x	4.8	cm³
W_y	4.9	cm³
Weight	1718	g/m

F-GG 40x40



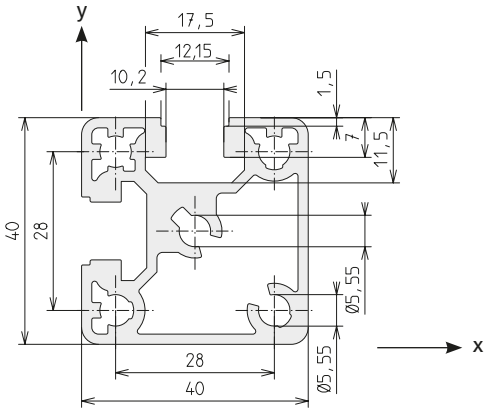

Code No. Profile F-GG 40x40			Anodised
4565000	Cut to size	max. 6000 mm	Clear
4565001	Bar	6000 mm	Clear

Connection	Slot geometry	Flange bracket	lot sizes	Code No.
Short	30	40 (K)	10, 20, 30... pcs	**4566700**
	40			**4566701**
Flange slot stone -N-	40	40 (N)	–	**4546700**

Area	611	mm²
I_x	10.1	cm⁴
I_y	10.1	cm⁴
W_x	4.8	cm³
W_y	4.8	cm³
Weight	1651	g/m

F-2G 40x40



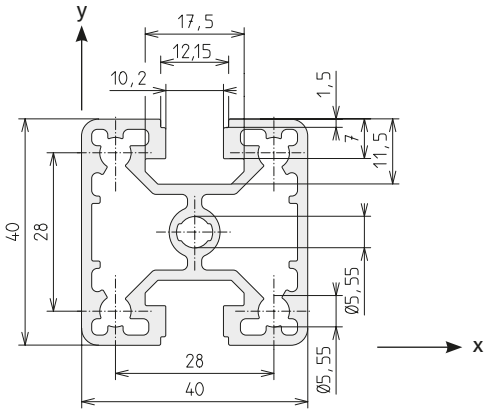

Code No. Profile F-2G 40x40			Anodised
4B25000	Cut to size	max. 6000 mm	Clear
4B25001	Bar	6000 mm	Clear

Area	543	mm²
I_x	9.3	cm⁴
I_y	9.4	cm⁴
W_x	4.6	cm³
W_y	4.7	cm³
Weight	1466	g/m

Connection	Slot geometry	Flange bracket	lot sizes	Code No.
Long	30	40	10, 20, 30... pcs	4816703
	40			4816702

F-3G 40x40



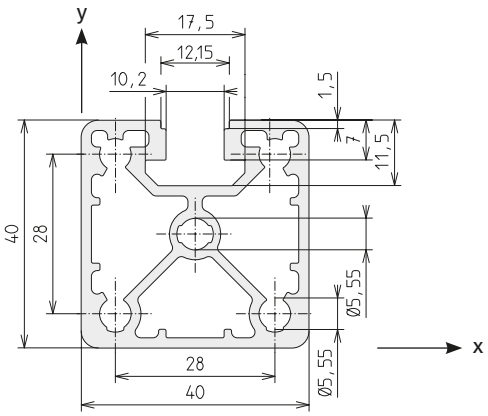

Code No. Profile F-3G 40x40			Anodised
4B35000	Cut to size	max. 6000 mm	Clear
4B35001	Bar	6000 mm	Clear

Area	539	mm²
I_x	9.7	cm⁴
I_y	9.8	cm⁴
W_x	4.8	cm³
W_y	4.9	cm³
Weight	1455	g/m

Connection	Slot geometry	Flange bracket	lot sizes	Code No.
Short	30	40 (K)	10, 20, 30... pcs	4566700
	40			4566701
Flange slot stone -N-	40	40 (N)	–	4546700

Visible profiles / size 40

Order instruction:

- Purchase only in lot sizes and a multiple of that see product table below

F-G 40x80



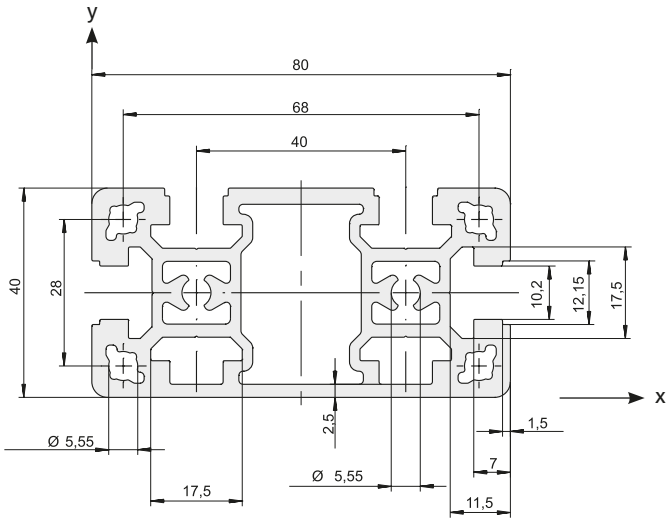

Code No. Profile F-G 40x80			Anodised
4B85000	Cut to size	max. 6000 mm	Clear
4B85001	Bar	6000 mm	Clear

Connection		Slot geometry	Flange bracket	lot sizes	Code No.
	long.	30	80	10, 20, 30... pcs	**4316706**
		40			**4246702**
	Flange slot stone -N-	40	40 (N)	–	**4546700**

Area	1220	mm²
I_x	20.9	cm⁴
I_y	82.3	cm⁴
W_x	10.4	cm³
W_y	20.6	cm³
Weight	3295	g/m

F-GG 40x80

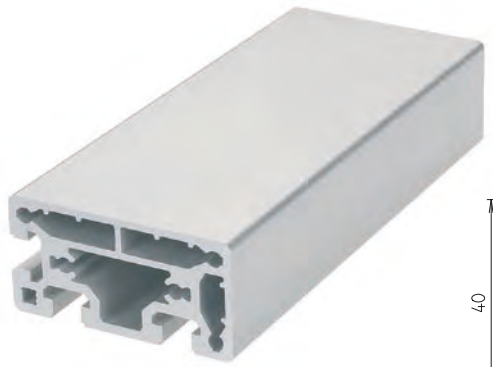

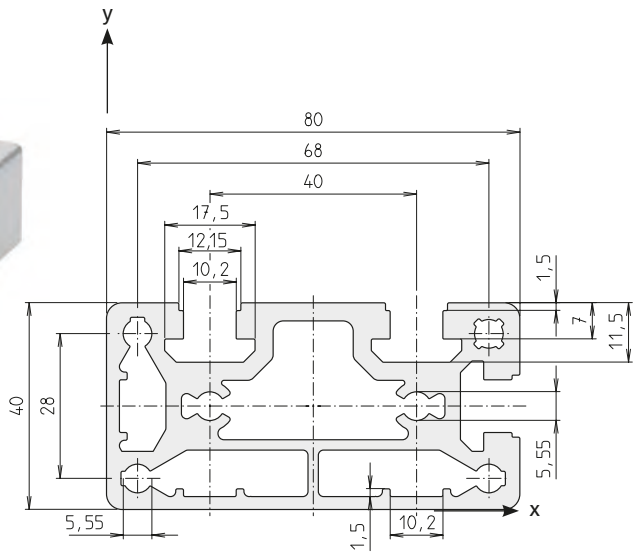

Code No. Profile F-GG 40x80			Anodised
4B15000	Cut to size	max. 6000 mm	Clear
4B15001	Bar	6000 mm	Clear

Connection		Slot geometry	Flange bracket	lot sizes	Code No.
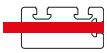	Extra long	40	80 (EL)	–	**4586702**
	Flange slot stone -N-	40	80 (N)	–	**4586703**
	Flange slot stone -N-	40	40 (N)	–	**4546700**

Area	1323	mm²
I_x	22.0	cm⁴
I_y	87.9	cm⁴
W_x	10.7	cm³
W_y	22.0	cm³
Weight	3565	g/m

4G-40x40



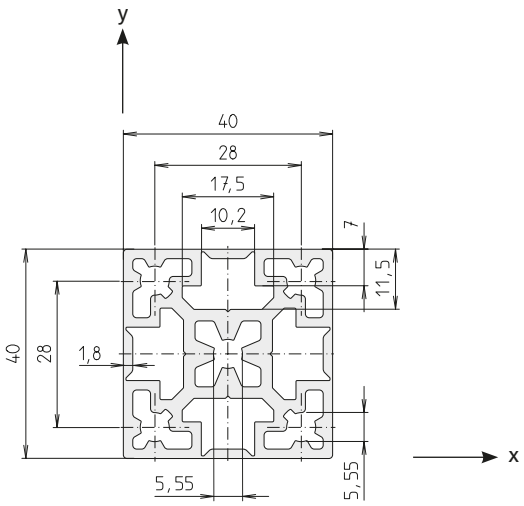

Area	696	mm^2
I_x	10.5	cm^4
I_y	10.5	cm^4
W_x	5.2	cm^3
W_y	5.2	cm^3
Weight	1877	g/m

Code No. Profile 4G-40x40			Anodised
4B65000	Cut to size	max. 6000 mm	Clear
4B65001	Bar	6000 mm	Clear

4G-40x80



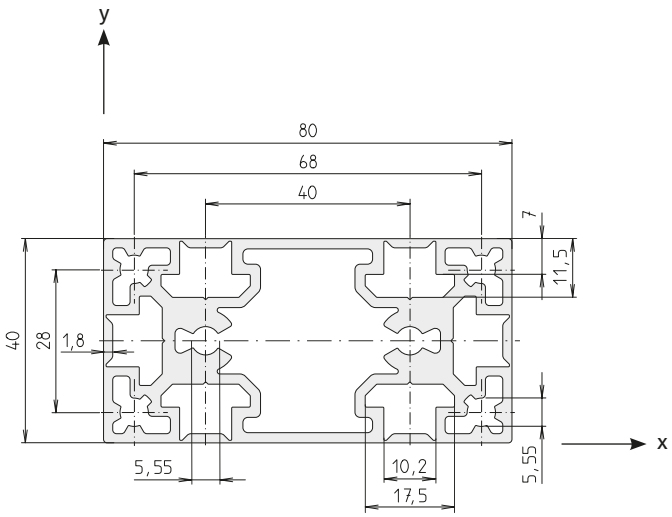

Area	1145	mm^2
I_x	18.7	cm^4
I_y	78.5	cm^4
W_x	9.3	cm^3
W_y	19.6	cm^3
Weight	3106	g/m

Code No. Profile 4G-40x80			Anodised
4B75000	Cut to size	max. 6000 mm	Clear
4B75001	Bar	6000 mm	Clear

Visible profiles / size 40

W 40-30



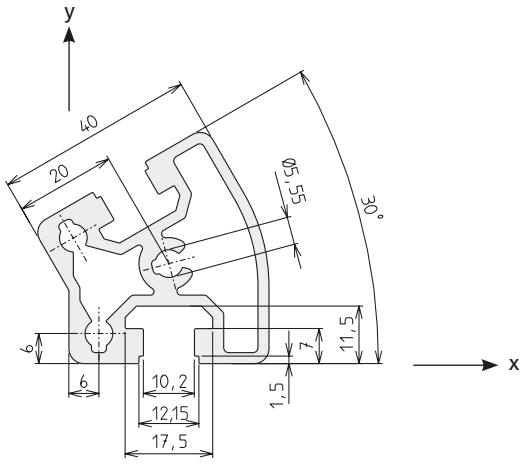

Area	619	mm²
I_x	10.0	cm⁴
I_y	10.0	cm⁴
W_x	3.7	cm³
W_y	4.2	cm³
Weight	1674	g/m

Code No. Angle profile W 40-30			Anodised
4765000	Cut to size	max. 6000 mm	Clear
4765001	Bar	6000 mm	Clear

Code No. Corner joint	Type
4462406	KLW 40-30

W 40-45



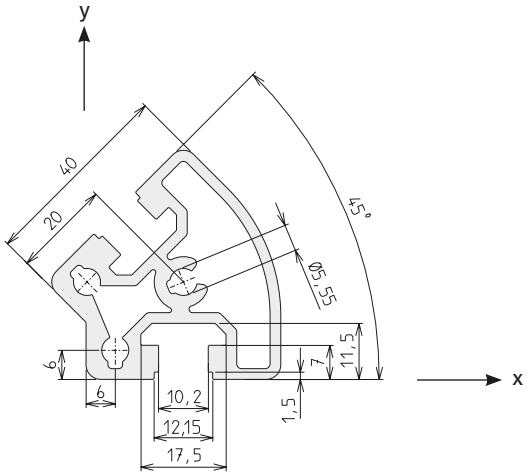

Area	620	mm²
I_x	9.7	cm⁴
I_y	9.8	cm⁴
W_x	3.4	cm³
W_y	4.2	cm³
Weight	1675	g/m

Code No. Angle profile W 40-45			Anodised
4775000	Cut to size	max. 6000 mm	Clear
4775001	Bar	6000 mm	Clear

Code No. Corner joint	Type
4472406	KLW 40-45

W 40-60



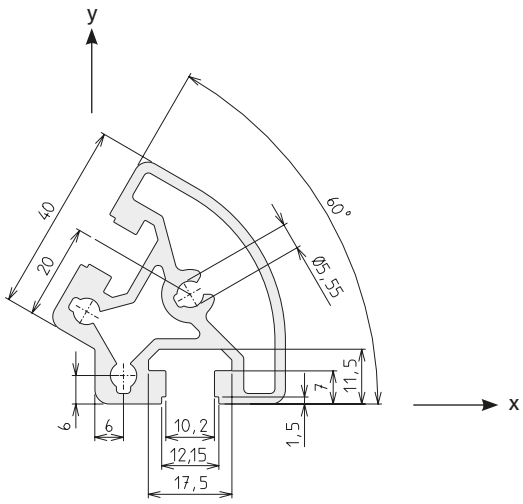

Area	671	mm²
I_x	11.2	cm⁴
I_y	12.8	cm⁴
W_x	4.2	cm³
W_y	4.6	cm³
Weight	1812	g/m

Code No. Angle profile W 40-60			Anodised
4785000	Cut to size	max. 6000 mm	Clear
4785001	Bar	6000 mm	Clear

Code No. Corner joint	Type
4632406	KLW 40-60

W 40-90

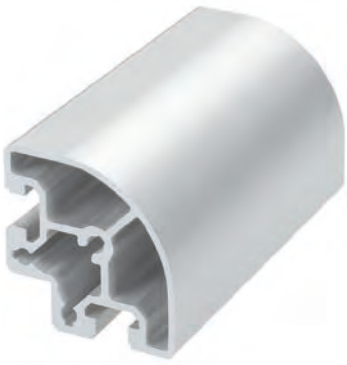

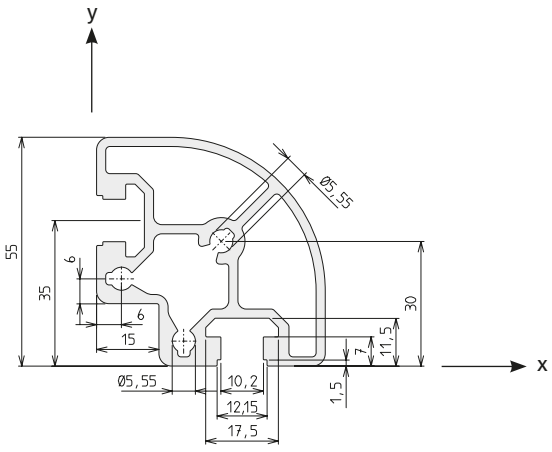

Area	797	mm²
I_x	22.0	cm⁴
I_y	22.0	cm⁴
W_x	7.4	cm³
W_y	7.4	cm³
Weight	2153	g/m

Code No. Angle profile W 40-90			Anodised
4795000	Cut to size	max. 6000 mm	Clear
4795001	Bar	6000 mm	Clear

Code No. Corner joint	Type
4482406	KLW 40-90

Visible profiles / size 50

Order instruction:

- Purchase only in lot sizes and a multiple of that see product table below

F-G 50x50



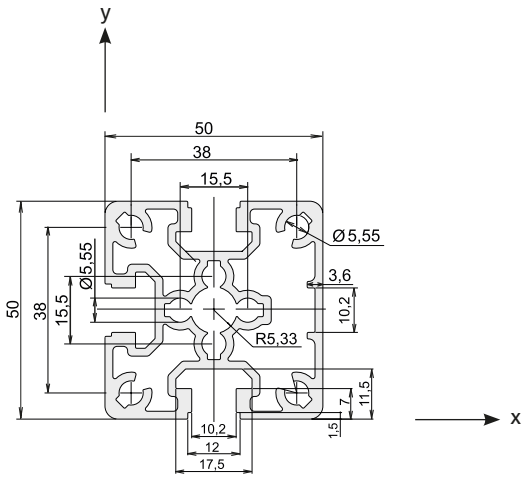

Code No. Profile F-G 50x50			Anodised
4A65000	Cut to size	max. 6000 mm	Clear
4A65001	Bar	6000 mm	Clear

Connection	Slot geometry	Flange bracket	lot sizes	Code No.
Long	30	50	10, 20, 30... pcs	**4086706**
	40	50	10, 20, 30... pcs	**4086702**
Flange slot stone -N-	40	50 (N)	–	**4A66700**

Area	832	mm²
I_x	21.6	cm⁴
I_y	22.2	cm⁴
W_x	8.6	cm³
W_y	8.9	cm³
Weight	2247	g/m

F-GG 50x50



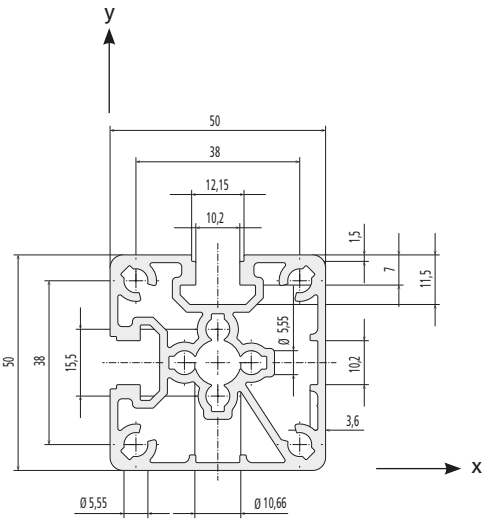

Code No. Profile F-GG 50x50			Anodised
4A75000	Cut to size	max. 6000 mm	Clear
4A75001	Bar	6000 mm	Clear

Connection	Slot geometry	Flange bracket	lot sizes	Code No.
Flange slot stone -N-	40	50 (N)	–	**4A66700**

Area	815	mm²
I_x	21.5	cm⁴
I_y	22.1	cm⁴
W_x	8.4	cm³
W_y	8.7	cm³
Weight	2200	g/m

F-2G 50x50



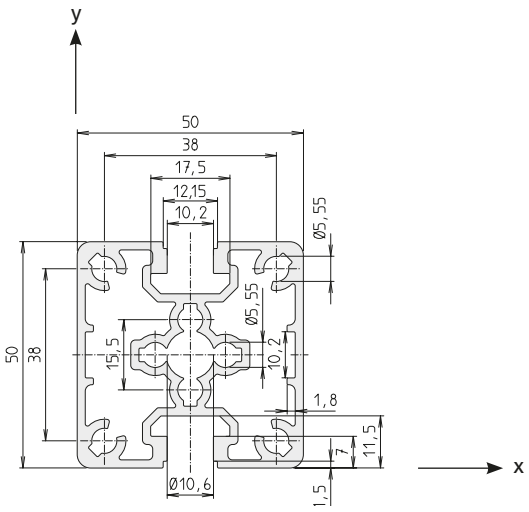

Area	779	mm²
I_x	20.6	cm⁴
I_y	21.8	cm⁴
W_x	8.3	cm³
W_y	8.7	cm³
Weight	2103	g/m

Code No. Profile F-2G 50x50			Anodised
4A85000	Cut to size	max. 6000 mm	Clear
4A85001	Bar	6000 mm	Clear

Connection	Slot geometry	Flange bracket	lot sizes	Code No.
Long	30	50	10, 20, 30... pcs	4086706
	40	50	10, 20, 30... pcs	4086702

F-3G 50x50



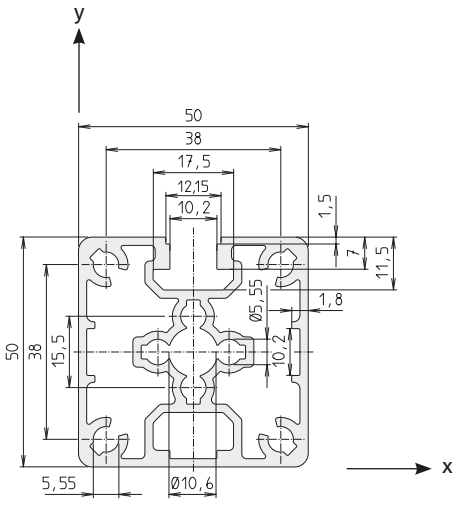

Area	791	mm²
I_x	20.7	cm⁴
I_y	22.8	cm⁴
W_x	9.0	cm³
W_y	9.1	cm³
Weight	2137	g/m

Code No. Profile F-3G 50x50			Anodised
4A95000	Cut to size	max. 6000 mm	Clear
4A95001	Bar	6000 mm	Clear

Connection	Slot geometry	Flange bracket	lot sizes	Code No.
Flange slot stone -N-	40	50 (N)	–	4A66700

Visible profiles / size 50

Pillar profile SP-50x50



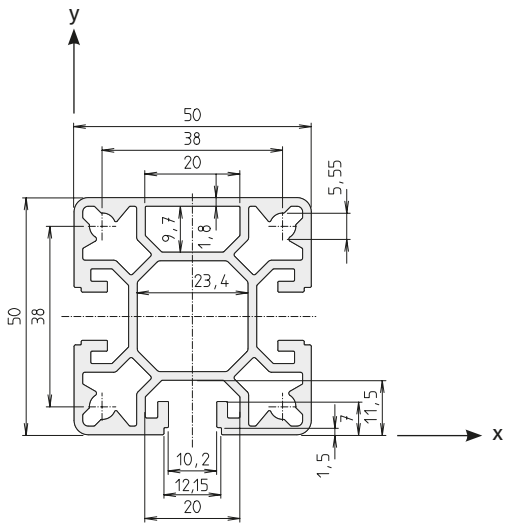

Area	753	mm^2
I_x	20.8	cm^4
I_y	20.7	cm^4
W_x	8.2	cm^3
W_y	8.3	cm^3
Weight	2033	g/m

Code No. Pillar profile SP-50x50			Anodised
4635000	Cut to size	max. 6000 mm	Clear
4635001	Bar	6000 mm	Clear

Note: Purely a pillar/post profile on the face of which no connector can be attached. Profile lengths 6700 mm available on request.



Visible profiles / size 60

Order instruction:

- Purchase only in lot sizes and a multiple of that see product table below

F-G 60x60



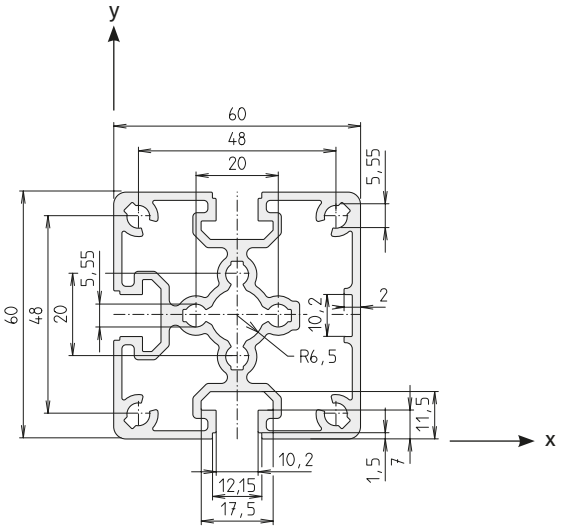

Code No. Profile F-G 60x60			Anodised
4A25000	Cut to size	max. 6000 mm	Clear
4A25001	Bar	6000 mm	Clear

Connection	Slot geometry	Flange bracket	lot sizes	Code No.
Long	30	60	10, 20, 30... pcs	**4226706**
	40	60	10, 20, 30... pcs	**4226702**
Flange slot stone -N-	40	60 (N)	–	**4A26700**

Area	1020	mm²
I_x	37.9	cm⁴
I_y	39.5	cm⁴
W_x	12.6	cm³
W_y	12.7	cm³
Weight	2757	g/m

F-GG 60x60



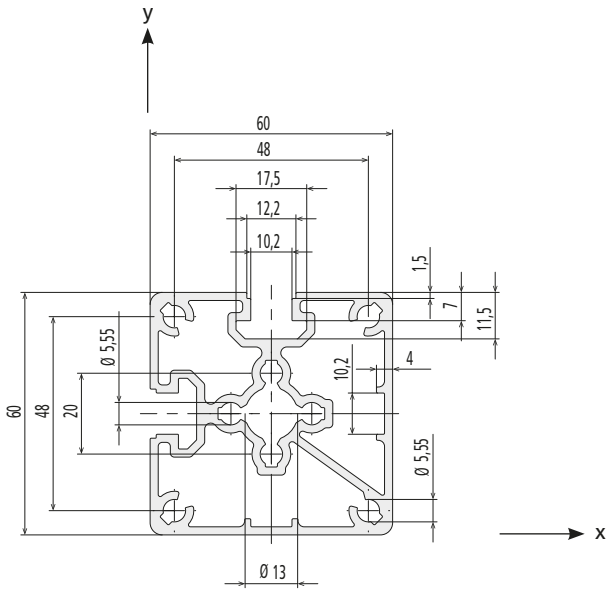

Code No. Profile F-GG 60x60			Anodised
4A35000	Cut to size	max. 6000 mm	Clear
4A35001	Bar	6000 mm	Clear

Connection	Slot geometry	Flange bracket	lot sizes	Code No.
Flange slot stone -N-	40	60 (N)	–	**4A26700**

Area	1001	mm²
I_x	38.1	cm⁴
I_y	39.0	cm⁴
W_x	12.5	cm³
W_y	12.8	cm³
Weight	2701	g/m

F-2G 60x60



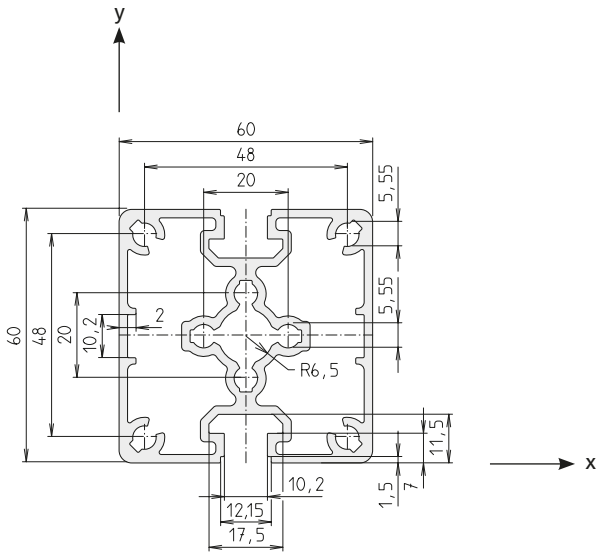

Code No. Profile F-2G 60x60			Anodised
4A45000	Cut to size	max. 6000 mm	Clear
4A45001	Bar	6000 mm	Clear

Area	956	mm²
I_x	36.2	cm⁴
I_y	39.1	cm⁴
W_x	12.1	cm³
W_y	13.0	cm³
Weight	2585	g/m

Connection	Slot geometry	Flange bracket	lot sizes	Code No.
Long	30	60	10, 20, 30... pcs	**4226706**
	40	60	10, 20, 30... pcs	**4226702**

F-3G 60x60



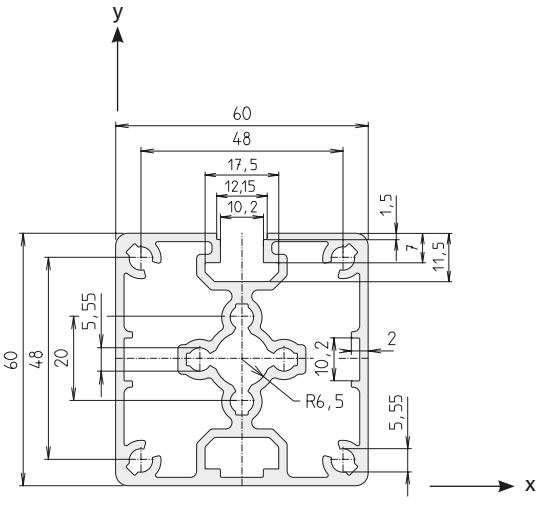

Code No. Profile F-3G 60x60			Anodised
4A55000	Cut to size	max. 6000 mm	Clear
4A55001	Bar	6000 mm	Clear

Area	981	mm²
I_x	36.5	cm⁴
I_y	41.2	cm⁴
W_x	11.9	cm³
W_y	13.7	cm³
Weight	2649	g/m

Connection	Slot geometry	Flange bracket	lot sizes	Code No.
Flange slot stone -N-	40	60 (N)	–	**4A26700**

Visible profiles / size 80

Order instruction:

- Purchase only in lot sizes and a multiple of that see product table below

F-G 80x80



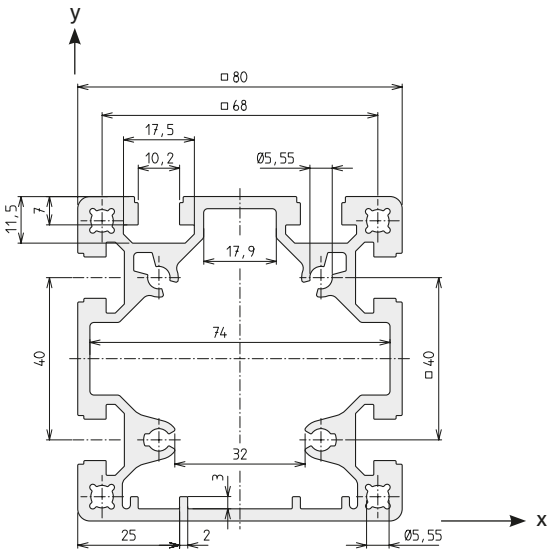

Code No. Profile F-G 80x80			Anodised
4585000	Cut to size	max. 6000 mm	Clear
4585001	Bar	6000 mm	Clear

Connection	Slot geometry	Flange bracket	lot sizes	Code No.
Long	30	80	10, 20, 30... pcs	**4316706**
	40	80	10, 20, 30... pcs	**4246702**
Extra long	40	80 (EL)	–	**4586702**
Flange slot stone -N-	40	80 (N)	–	**4586703**

Area	1710	mm²
I_x	135.5	cm⁴
I_y	139.3	cm⁴
W_x	34.8	cm³
W_y	33.0	cm³
Weight	4557	g/m

F-GG 80x80



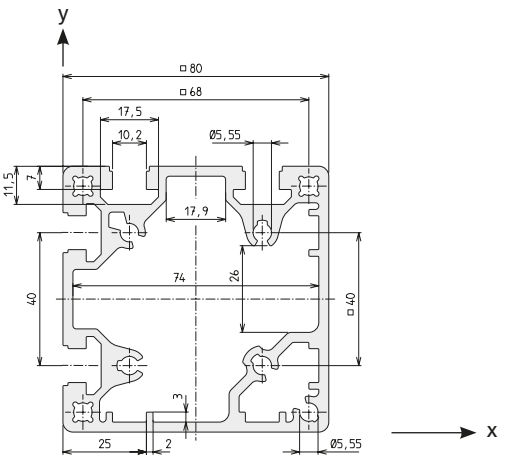

Code No. Profile F-GG 80x80			Anodised
4595000	Cut to size	max. 6000 mm	Clear
4595001	Bar	6000 mm	Clear

Connection	Slot geometry	Flange bracket	lot sizes	Code No.
Extra long	40	80 (EL)	–	**4586702**
Flange slot stone -N-	40	80 (N)	–	**4586703**

Area	1686	mm²
I_x	136.2	cm⁴
I_y	136.2	cm⁴
W_x	34.1	cm³
W_y	34.1	cm³
Weight	4497	g/m

F-2G 80x80



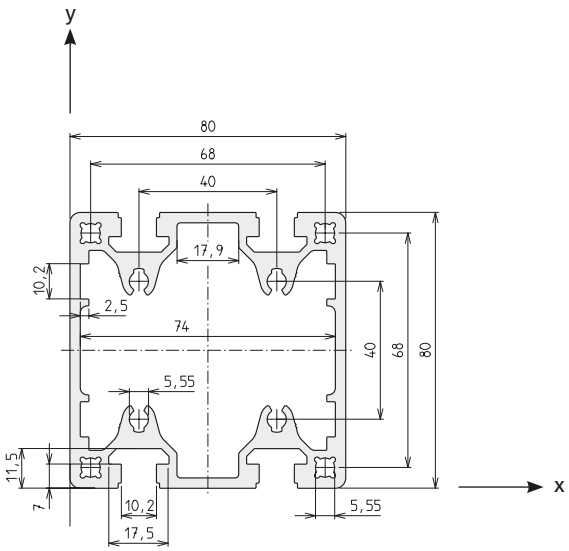

Code No. Profile F-2G 80x80			Anodised
4A15000	Cut to size	max. 6000 mm	Clear
4A15001	Bar	6000 mm	Clear

Area	1656	mm²
I_x	133.4	cm⁴
I_y	140.0	cm⁴
W_x	33.3	cm³
W_y	35.5	cm³
Weight	4471	g/m

Connection		Slot geometry	Flange bracket	lot sizes	Code No.
	Long	30	80	10, 20, 30... pcs	4316706
		40	80	10, 20, 30... pcs	4246702

F-3G 80x120-A



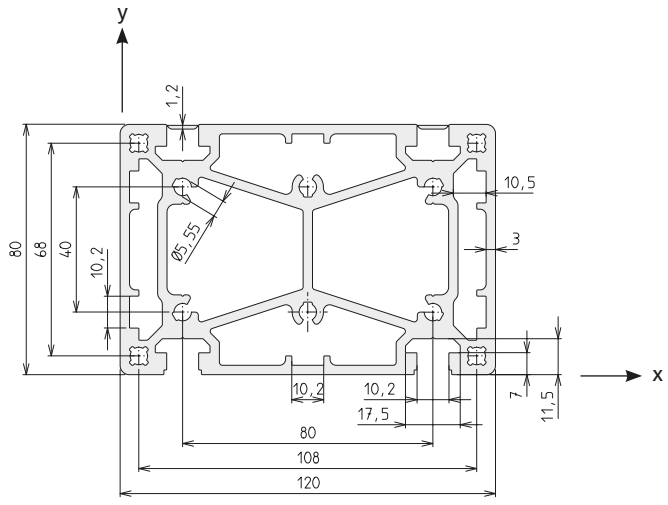

Code No. Profile F-3G 80x120-A			Anodised
4965000	Cut to size	max. 6000 mm	Clear
4965001	Bar	6000 mm	Clear

Area	2896	mm²
I_x	213.3	cm⁴
I_y	467.8	cm⁴
W_x	52.8	cm³
W_y	77.9	cm³
Weight	7818	g/m

Connection		Slot geometry	Flange bracket	lot sizes	Code No.
	Extra long	40	120 (A)	–	4966700
	Extra long	40	80 (EL)	–	4586702

Frame profiles / size 30

Order instruction:

- Purchase only in lot sizes and a multiple of that see product table below

Clamping profile KL 30x30-3



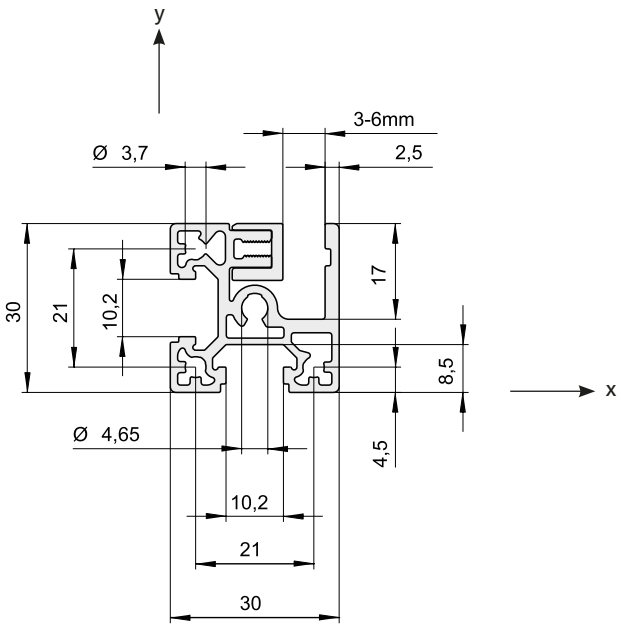

Area	320	mm²
I_x	2.5	cm⁴
I_y	3,1	cm⁴
W_x	1.6	cm³
W_y	2,1	cm³
Weight	989	g/m

Code No. Clamping profile KL 30x30-3			Anodised
4F75008	Cut to size	max. 6000 mm	Clear
4F75009	Bar	à 6000 mm	Clear

Code No. Corner joint	Type	lot sizes
4202406	KL 30	4, 8, 12... pcs

Clamping profile KLD 30x40

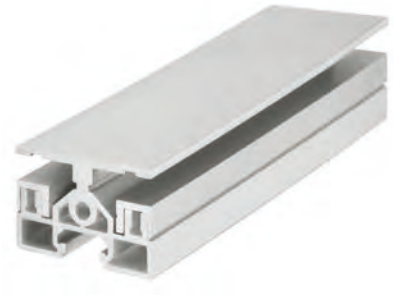

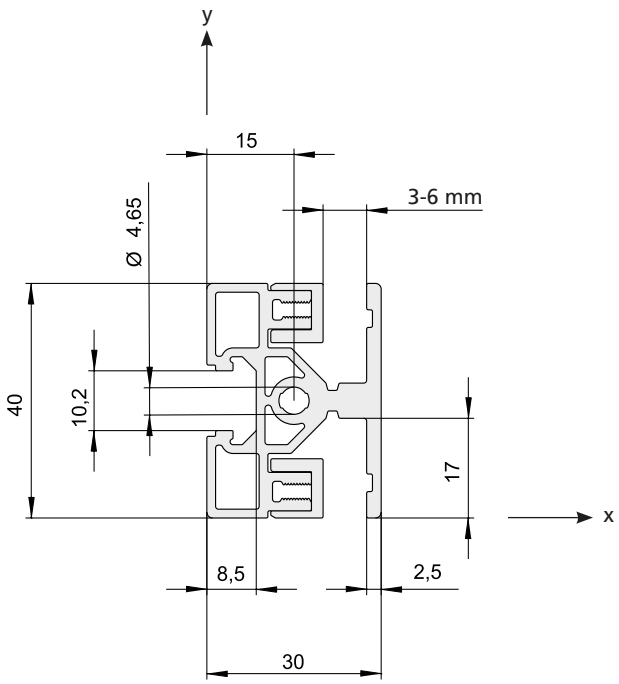

Area	436	mm²
I_x	5,5	cm⁴
I_y	3,8	cm⁴
W_x	2,7	cm³
W_y	2,5	cm³
Weight	1426	g/m

Code No. Clamping profile KLD 30x40			Anodised
4F85008	Cut to size	max. 6000 mm	Clear
4F85009	Bar	à 6000 mm	Clear

Frame profiles / size 30

Order instruction:

- Purchase only in lot sizes and a multiple of that see product table below

Clamping profile KLE 30x30



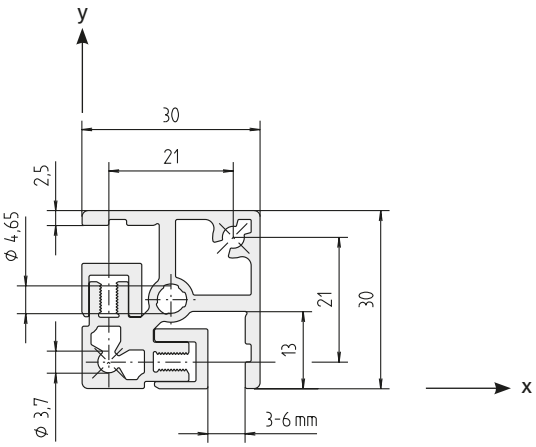

Area	348	mm²
I_x	3.0	cm⁴
I_y	3.0	cm⁴
W_x	2.0	cm³
W_y	2.0	cm³
Weight	1179	g/m

Code No. Clamping profile KLE 30x30			Anodised
4705008	Cut to size	max. 6000 mm	Clear
4705009	Bar	6000 mm	Clear

Code No. Corner joint	Type	lot sizes
4702406	KLE 30	4, 8, 12... pcs

Clamping profile KLW 30-15



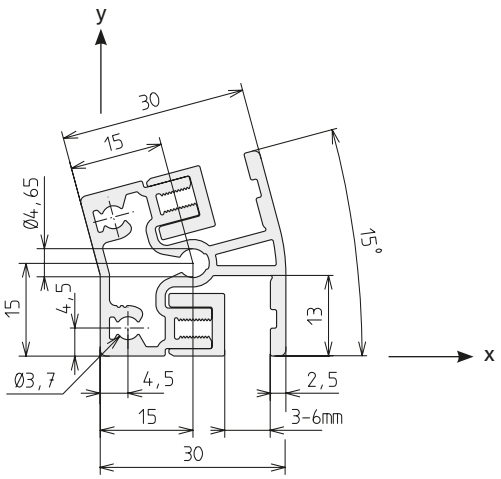

Area	405	mm²
I_x	2.5	cm⁴
I_y	3.3	cm⁴
W_x	1.4	cm³
W_y	1.9	cm³
Weight	853	g/m

Code No. Clamping profile KLW 30-15			Anodised
4405000	Cut to size	max. 6000 mm	Clear
4405001	Bar	6000 mm	Clear

Code No. Corner joint	Type	lot sizes
4402406	KLW 30-15	–

Clamping profile KLW 30-30



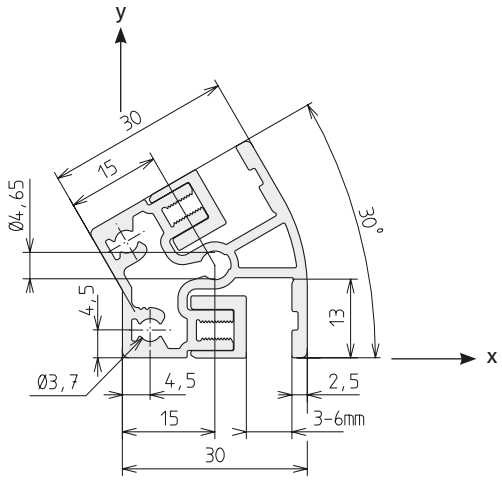

Area	405	mm²
I_x	2.4	cm⁴
I_y	3.3	cm⁴
W_x	1.2	cm³
W_y	1.8	cm³
Weight	852	g/m

Code No. Clamping profile KLW 30-30			Anodised
4415000	Cut to size	max. 6000 mm	Clear
4415001	Bar	6000 mm	Clear

Code No. Corner joint	Type
4412406	KLW 30-30

Clamping profile KLW 30-45



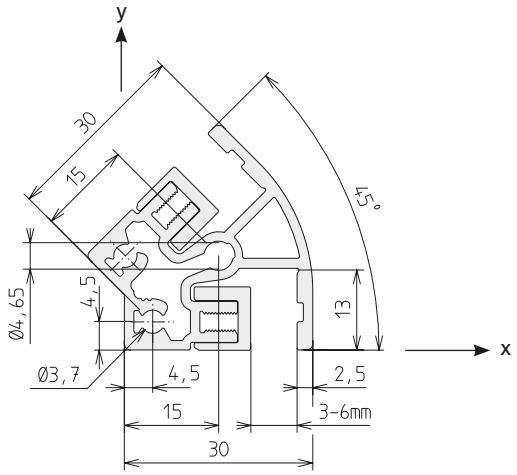

Area	402	mm²
I_x	2.4	cm⁴
I_y	3.1	cm⁴
W_x	1.1	cm³
W_y	1.7	cm³
Weight	845	g/m

Code No. Clamping profile KLW 30-45			Anodised
4425000	Cut to size	max. 6000 mm	Clear
4425001	Bar	6000 mm	Clear

Code No. Corner joint	Type
4422406	KLW 30-45

Frame profiles / size 30

Clamping profile KLW 30-60



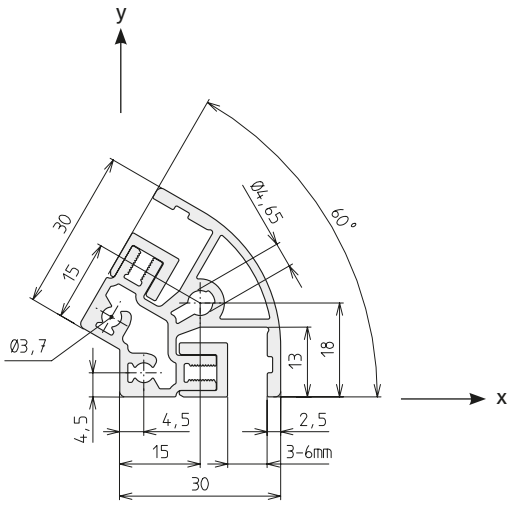

Area	357	mm²
I_x	3.3	cm⁴
I_y	3.5	cm⁴
W_x	1.7	cm³
W_y	1.5	cm³
Weight	966	g/m

Code No. Clamping profile KLW30-60			Anodised
4445000	Cut to size	max. 6000 mm	Clear
4445001	Bar	6000 mm	Clear

Code No. Corner joint	Type
4622406	KLW 30-60

Clamping profile KLW 30-90



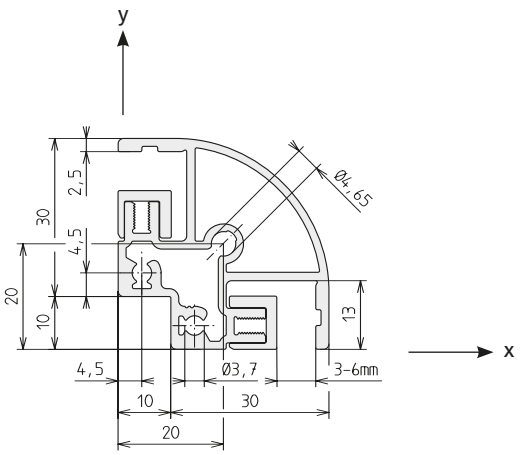

Area	640	mm²
I_x	9.7	cm⁴
I_y	7.2	cm⁴
W_x	2.7	cm³
W_y	4.1	cm³
Weight	1051	g/m

Code No. Clamping profile KLW 30-90			Anodised
4435000	Cut to size	max. 6000 mm	Clear
4435001	Bar	6000 mm	Clear

Code No. Corner joint	Type
4432406	KLW 30-90

Order instruction:

- Purchase only in lot sizes and a multiple of that see product table below

ESP 30x30



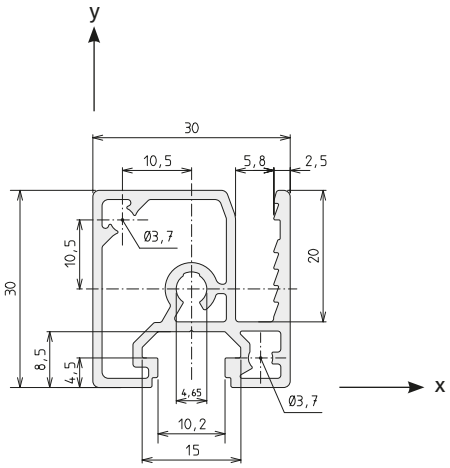

Code No. Inserting profile ESP 30x30			Anodised
4895000	Cut to size	max. 6000 mm	Clear
4895001	Bar	6000 mm	Clear

Area	275	mm^2
I_x	2.3	cm^4
I_y	2.8	cm^4
W_x	1.4	cm^3
W_y	1.8	cm^3
Weight	742	g/m

Code No.	Type	lot sizes
4202406	Corner joint KL 30	4, 8, 12... pcs
4016578	Wire mesh 30x30x3 Galvanised steel, max. size 2x3 m	–

ESP 30x30/2



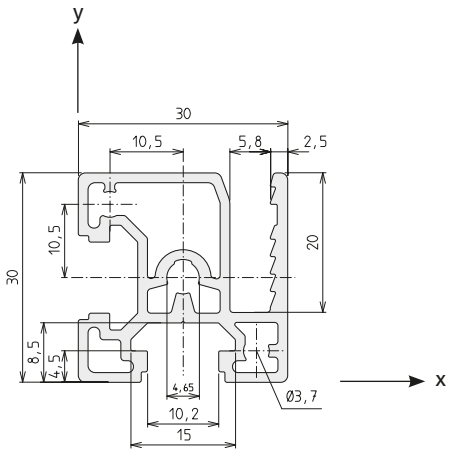

Code No. Inserting profile ESP 30x30/2			Anodised
4935000	Cut to size	max. 6000 mm	Clear
4935001	Bar	6000 mm	Clear

Area	293.8	mm^2
I_x	2.4	cm^4
I_y	2.8	cm^4
W_x	1.5	cm^3
W_y	1.8	cm^3
Weight	796	g/m

Code No.	Type	lot sizes
4202406	Corner joint KL 30	4, 8, 12... pcs
4016578	Wire mesh 30x30x3 Galvanised steel, max. size 2x3 m	–

Frame profiles / size 40

Order instruction:

- Purchase only in lot sizes and a multiple of that see product table below

STP 30



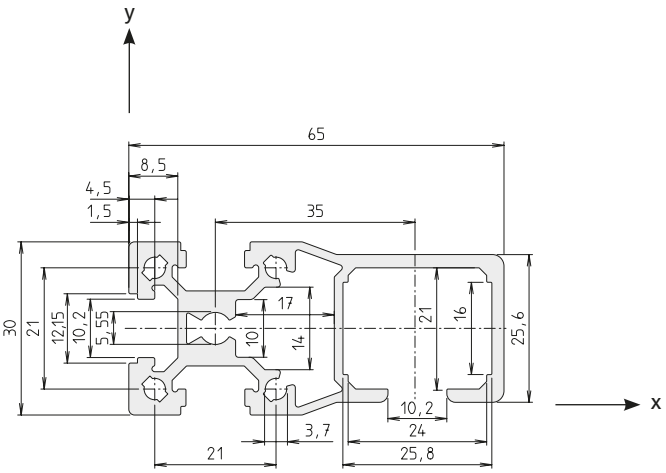

Code No. Sliding door profile STP-30			Anodised
4175000	Cut to size	max. 6000 mm	Clear
4175001	Bar	6000 mm	Clear

Area	536	mm^2
I_x	5.2	cm^4
I_y	22.8	cm^4
W_x	3.7	cm^3
W_y	6.1	cm^3
Weight	1448	g/m

Connection	Slot geometry	Flange bracket	lot sizes	Code No.
 long. + transverse	30	30	10, 20, 30... pcs	**4176704**
	40	30	10, 20, 30... pcs	**4176705**

Clamping profile KL 40x40-3



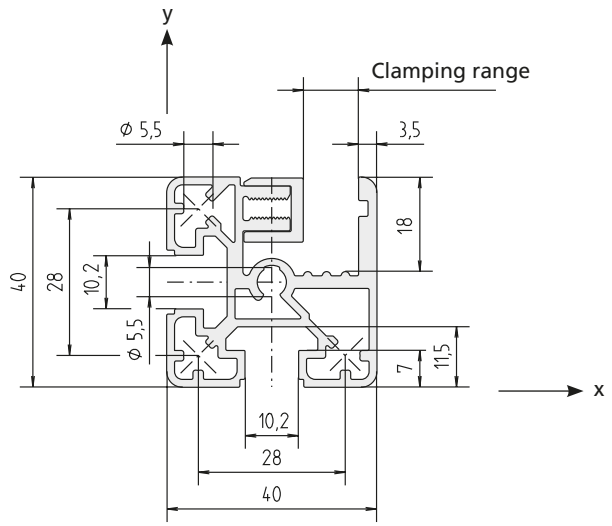

Code No. Clamping profile KL 40x40-3			Clamping range	Ano-dised
4B95100	Cut to size	max. 6000 mm	0-6 mm	Clear
4B95101	Bar	6000 mm	0-6 mm	Clear
4B95008	Cut to size	max. 6000 mm	4-10 mm	Clear
4B95009	Bar	6000 mm	4-10 mm	Clear

Code No. Corner joint	Type	lot sizes
4212406	KL 40	4, 8, 12... pcs

Area	561	mm^2
I_x	7.6	cm^4
I_y	9.3	cm^4
W_x	3.8	cm^3
W_y	4.6	cm^3
Weight	1745	g/m

Clamping profile KLD 40x40



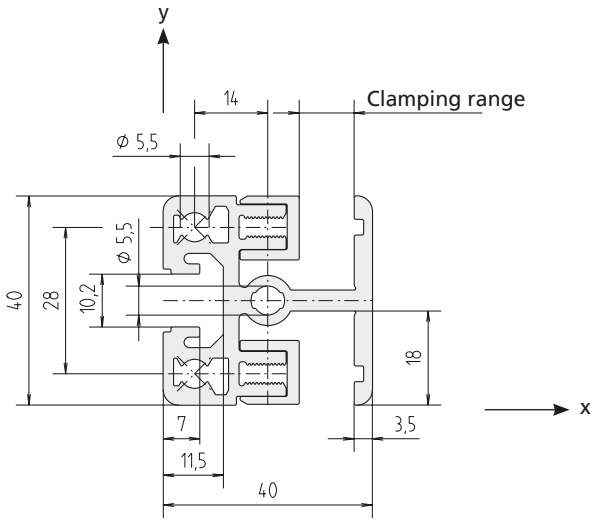

Area	612	mm²
I_x	8.3	cm⁴
I_y	10.0	cm⁴
W_x	4.1	cm³
W_y	5.5	cm³
Weight	1975	g/m

Code No. Clamping profile KLD 40x40			Clamping range	Ano-dised
4615100	Cut to size	max. 6000 mm	0-6 mm	Clear
4615101	Bar	6000 mm	0-6 mm	Clear
4615008	Cut to size	max. 6000 mm	4-10 mm	Clear
4615009	Bar	6000 mm	4-10 mm	Clear

Code No. Corner joint	Type	lot sizes
4212408	KLK 40	4, 8, 12... pcs
4212407	KLV 40	4, 8, 12... pcs

Clamping profile KLE 40x40



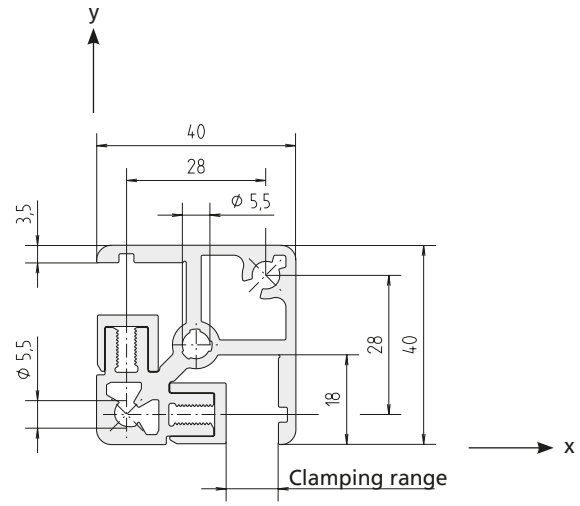

Area	590	mm²
I_x	9.3	cm⁴
I_y	9.3	cm⁴
W_x	4.6	cm³
W_y	4.6	cm³
Weight	1914	g/m

Code No. Clamping profile KLE 40x40			Clamping range	Ano-dised
4715100	Cut to size	max. 6000 mm	0-6 mm	Clear
4715101	Bar	6000 mm	0-6 mm	Clear
4715008	Cut to size	max. 6000 mm	4-10 mm	Clear
4715009	Bar	6000 mm	4-10 mm	Clear

Code No. Corner joint	Type	lot sizes
4712406	KLE 40	4, 8, 12... pcs

Frame profiles / size 40

Clamping profile KLW 40-15



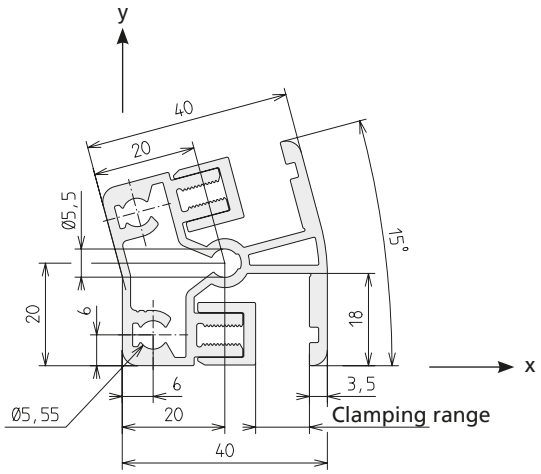

Area	641	mm^2
I_x	7.4	cm^4
I_y	9.7	cm^4
W_x	3.1	cm^3
W_y	4.4	cm^3
Weight	1408	g/m

Code No. Clamping profile KLW 40-15			Clamping range	Ano-dised
4455100	Cut to size	max. 6000 mm	0-6 mm	Clear
4455101	Bar	6000 mm	0-6 mm	Clear
4455000	Cut to size	max. 6000 mm	4-10 mm	Clear
4455001	Bar	6000 mm	4-10 mm	Clear

Code No. Corner joint	Type
4412406	KLW 40-15

Clamping profile KLW 40-45



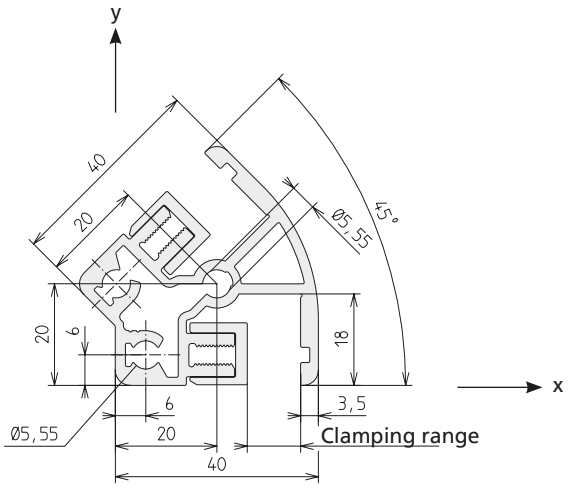

Area	654	mm²
I_x	7.3	cm⁴
I_y	9.6	cm⁴
W_x	2.6	cm³
W_y	3.9	cm³
Weight	1764	g/m

Code No. Clamping profile KLW 40-45			Clamping range	Ano-dised
4475100	Cut to size	max. 6000 mm	0-6 mm	Clear
4475101	Bar	6000 mm	0-6 mm	Clear
4475000	Cut to size	max. 6000 mm	4-10 mm	Clear
4475001	Bar	6000 mm	4-10 mm	Clear

Code No. Corner joint	Type
4472406	KLW 40-45

Clamping profile KLW 40-60



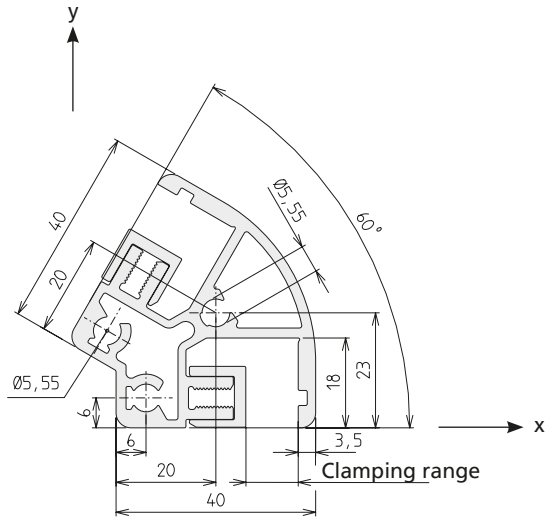

Area	572	mm²
I_x	9.6	cm⁴
I_y	10.7	cm⁴
W_x	3.8	cm³
W_y	3.3	cm³
Weight	1545	g/m

Code No. Clamping profile KLW 40-60			Clamping range	Ano-dised
4495100	Cut to size	max. 6000 mm	0-6 mm	Clear
4495101	Bar	6000 mm	0-6 mm	Clear
4495000	Cut to size	max. 6000 mm	4-10 mm	Clear
4495001	Bar	6000 mm	4-10 mm	Clear

Code No. Corner joint	Type
4632406	KLW 40-60

Frame profiles / size 40

Order instruction:

- Purchase only in lot sizes and a multiple of that see product table below

Clamping profile KLW 40-90



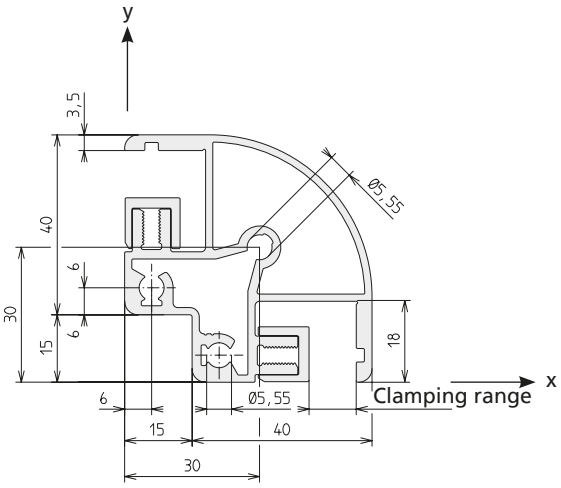

Code No. Clamping profile KLW 40-90			Clamping range	Ano-dised
4485100	Cut to size	max. 6000 mm	0-6 mm	Clear
4485101	Bar	6000 mm	0-6 mm	Clear
4485000	Cut to size	max. 6000 mm	4-10 mm	Clear
4485001	Bar	6000 mm	4-10 mm	Clear

Code No. Corner joint	Type	lot sizes
4482406	KLW 40-90	–

Area	774	mm²
I_x	17.3	cm⁴
I_y	17.3	cm⁴
W_x	5.8	cm³
W_y	5.8	cm³
Weight	1767	g/m

ESP 40x40



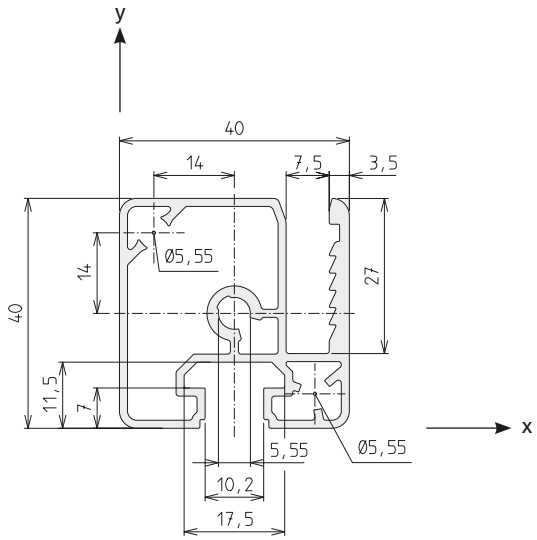

Code No. Inserting profile ESP 40x40			Anodised
4905000	Cut to size	max. 6000 mm	Clear
4905001	Bar	6000 mm	Clear

Code No.	Type	lot sizes
4212406	Corner joint KL 40	4, 8, 12... pcs
4016579	Wire mesh 40x40x3.8 Galvanised steel, max. size 2x3 m	–

Area	405	mm²
I_x	6.1	cm⁴
I_y	7.3	cm⁴
W_x	2.7	cm³
W_y	3.5	cm³
Weight	1095	g/m

ESP 40x40/2



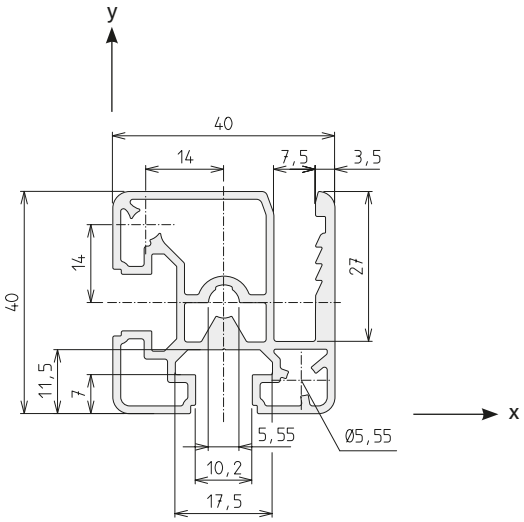

Code No. Inserting profile ESP 40x40			Anodised
4945000	Cut to size	max. 6000 mm	Clear
4945001	Bar	6000 mm	Clear

Area	457	mm²
I_x	6.3	cm⁴
I_y	7.7	cm⁴
W_x	3.0	cm³
W_y	3.6	cm³
Weight	1234	g/m

Code No.	Type	lot sizes
4212406	Corner joint KL 40	4, 8, 12... pcs
4016579	Wire mesh 40x40x3.8 Galvanised steel, max. size 2x3 m	–

STP-40



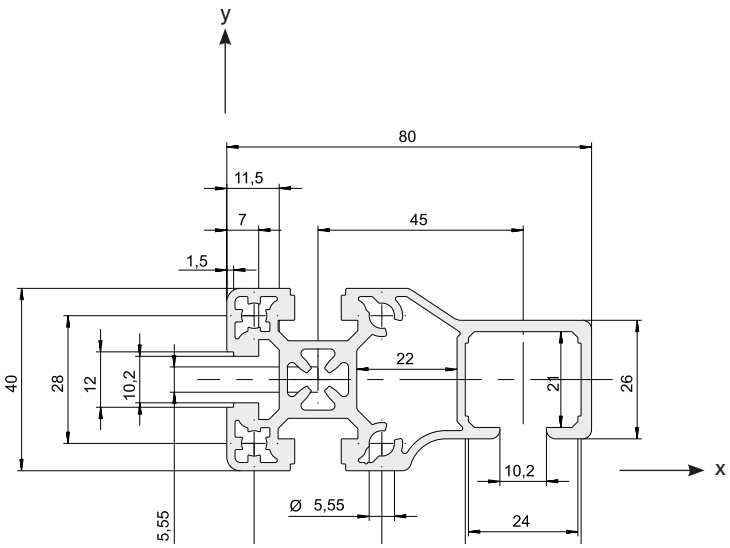

Code No. Sliding door profile STP-40			Anodised
4185000	Cut to size	max. 6000 mm	Clear
4185001	Bar	6000 mm	Clear

Area	815	mm²
I_x	12.5	cm⁴
I_y	46.5	cm⁴
W_x	6.1	cm³
W_y	9.7	cm³
Weight	2199	g/m

Connection	Slot geometry	Flange bracket	lot sizes	Code No.
 long. + transverse	30	40	10, 20, 30... pcs	4816703
	40	40	10, 20, 30... pcs	4816702

Special profiles / size 15

15x40



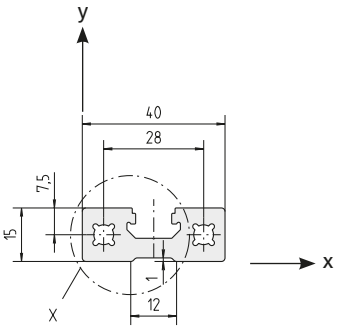

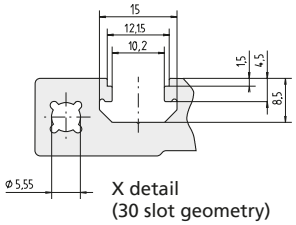

X detail
(30 slot geometry)

Code No. Profile 15x40			Anodised
4385000	Cut to size	max. 3000 mm	Clear
4385001	Bar	3000 mm	Clear

Connection	Quantity required per conn.	Slot geometry	Flange bracket	Code No.
long.	2	30	15	4386704
	2	40	15	4386705

Area	421	mm²
I_x	0.8	cm⁴
I_y	6.6	cm⁴
W_x	1.3	cm³
W_y	3.3	cm³
Weight	1137	g/m

15x60



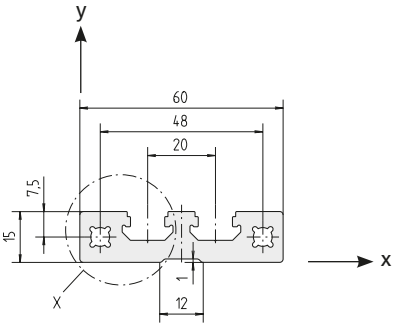

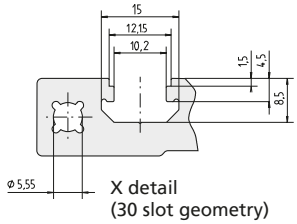

X detail
(30 slot geometry)

Code No. Profile 15x60			Anodised
4345000	Cut to size	max. 3000 mm	Clear
4345001	Bar	3000 mm	Clear

Connection	Quantity required per conn.	Slot geometry	Flange bracket	Code No.
long.	2	30	15	4386704
	2	40	15	4386705

Area	619	mm²
I_x	1.2	cm⁴
I_y	21.0	cm⁴
W_x	1.9	cm³
W_y	7.0	cm³
Weight	1670	g/m

15x80



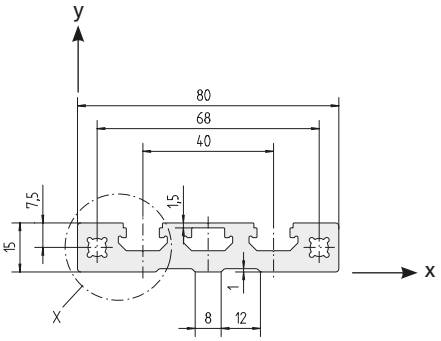

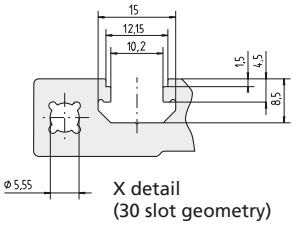

X detail
(30 slot geometry)

Code No. Profile 15x80			Anodised
4355000	Cut to size	max. 3000 mm	Clear
4355001	Bar	3000 mm	Clear

Connection	Quantity required per conn.	Slot geometry	Flange bracket	Code No.
long.	2	30	15	4386704
	2	40	15	4386705

Area	823	mm²
I_x	1.7	cm⁴
I_y	47.8	cm⁴
W_x	2.5	cm³
W_y	11.9	cm³
Weight	2220	g/m

15x120



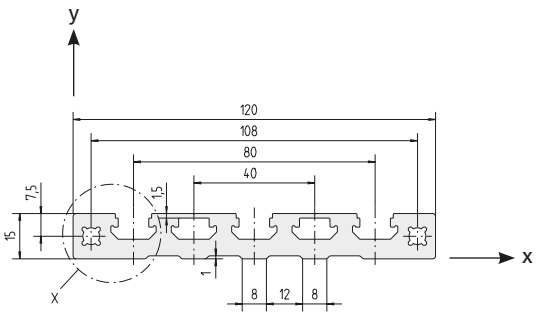

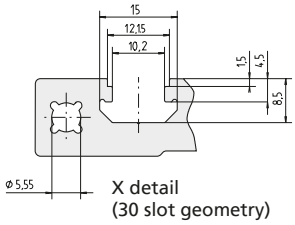

Code No. Profile 15x120			Anodised
4365000	Cut to size	max. 6000 mm	Clear
4365001	Bar	6000 mm	Clear

Area	1213	mm²
I_x	2.4	cm⁴
I_y	154.9	cm⁴
W_x	3.6	cm³
W_y	25.8	cm³
Weight	3270	g/m

Connection	Quantity required per conn.	Slot geometry	Flange bracket	Code No.
long.	2	30	15	**4386704**
	2	40	15	**4386705**

15x160



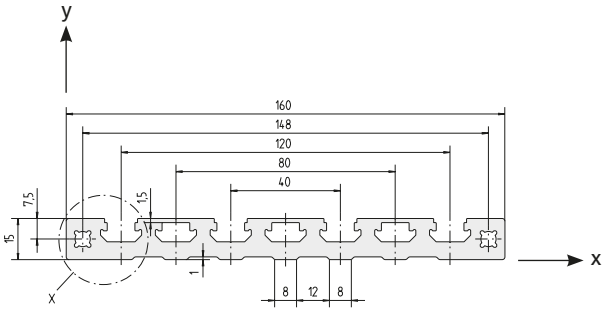

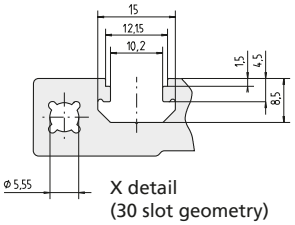

Code No. Profile 15x160			Anodised
4375000	Cut to size	max. 6000 mm	Clear
4375001	Bar	6000 mm	Clear

Area	1602	mm²
I_x	3.1	cm⁴
I_y	359.0	cm⁴
W_x	4.8	cm³
W_y	44.9	cm³
Weight	4320	g/m

Connection	Quantity required per conn.	Slot geometry	Flange bracket	Code No.
long.	2	30	15	**4386704**
	2	40	15	**4386705**

Special profiles M-BLOCAN®/ size 20

Order instruction:

- Purchase only in lot sizes and a multiple of that see product table below

F-20x20



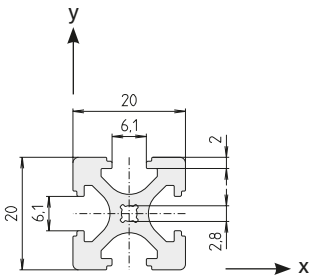

Area	198	mm²
I_x	0.8	cm⁴
I_y	0.8	cm⁴
W_x	0.8	cm³
W_y	0.8	cm³
Weight	533	g/m

Code No. Profile F-20x20			Anodised
E01000BBA	Cut to size	max. 3000 mm	Clear
E01000BBC	Bar	3000 mm	Clear

Connection	To slot geom.	Flange bracket kit	lot sizes	Code No.
long.+ transverse	20	F-20x20	10, 20, 30... pcs	E01007AAE
	30	Adapter	–	E01009AAE
	40	Adapter	–	E01012AAE

F-20x40



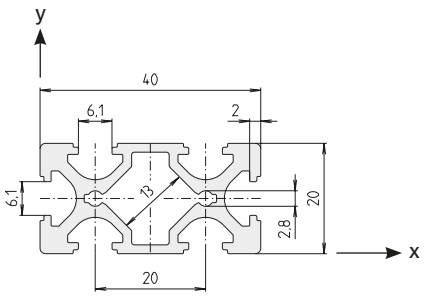

Area	313.2	mm²
I_x	1.31	cm⁴
I_y	5.39	cm⁴
W_x	1.31	cm³
W_y	2.69	cm³
Weight	846	g/m

Code No. Profile F-20x40			Anodised
E03000BBA	Cut to size	max. 6000 mm	Clear
E03000BBC	Bar	6000 mm	Clear

Connection	To slot geom.	Flange bracket kit	lot sizes	Code No.
transverse	20	F-20x40	10, 20, 30... pcs	E01007AAE
long.	20	F-20x40	10, 20, 30... pcs	E03007AAE
	30	Adapter	–	E03009AAE
	40	Adapter	–	E03012AAE

F-R 20



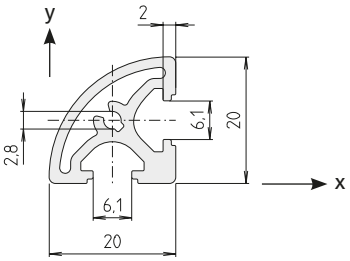

Area	154.50	mm²
I_x	0.54	cm⁴
W_x	0.63	cm³
W_y	0.48	cm³
Weight	416	g/m

Code No. Profile F-R 20			Anodised
E02000BBA	Cut to size	max. 3000 mm	Clear
E02000BBC	Bar	3000 mm	Clear

Connection	To slot geom.	Flange bracket kit	lot sizes	Code No.
long. + transverse	20	F-R 20	10, 20, 30... pcs	E02007AAE
	30	Adapter	–	E07009AAE
	40	Adapter	–	E07012AAE

F-G 20x20



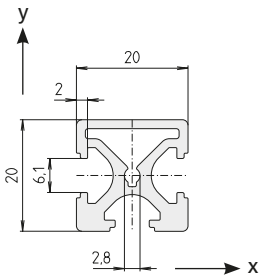

Area	182.00	mm²
I_x	0.77	cm⁴
I_y	0.71	cm⁴
W_x	0.792	cm³
W_y	0.714	cm³
Weight	491	g/m

Code No. Profile F-G 20x20			Anodised
E07000BBA	Cut to size	max. 3000 mm	Clear
E07000BBC	Bar	3000 mm	Clear

Connection	To slot geom.	Flange bracket kit	lot sizes	Code No.
Long	20	F-G 20x20	10, 20, 30... pcs	E01007AAE
	30	Adapter	–	E01009AAE
	40	Adapter	–	E01012AAE
Short	20	F-G 20x20	10, 20, 30... pcs	E07007AAE
	30	Adapter	–	E07009AAE
	40	Adapter	–	E07012AAE

F-GG 20x20



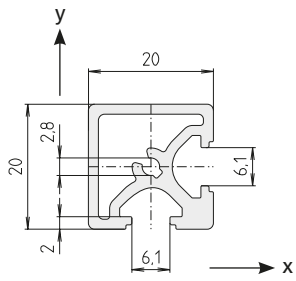

Area	166.00	mm²
I_x	0.72	cm⁴
W_x	0.74	cm³
W_y	0.70	cm³
Weight	450	g/m

Code No. Profile F-GG 20x20			Anodised
E08000BBA	Cut to size	max. 3000 mm	Clear
E08000BBC	Bar	3000 mm	Clear

Connection	To slot geom.	Flange bracket kit	lot sizes	Code No.
Short	20	F-GG 20x20	10, 20, 30... pcs	E07007AAE
	30	Adapter	–	E07009AA
	40	Adapter	–	E07012AAE

Special profiles M-BLOCAN®/ size 20

Order instruction:

- Purchase only in lot sizes and a multiple of that see product table below

Clamping profile KL 20x20



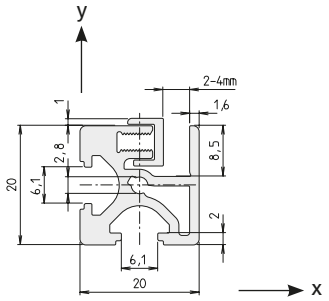

Area	182.90	mm²
I_x	0.70	cm⁴
I_y	0.74	cm⁴
W_x	0.79	cm³
W_y	0.80	cm³
Weight	493	g/m

Code No. Profile KL 20x20			Anodised
E04000BBB	Cut to size	max. 3000 mm	Clear
E04000BBD	Bar	3000 mm	Clear

Code No. Corner joint	Type	lot sizes
E04036BHE	KL 20x20	–

Clamping profile KLD 20x20



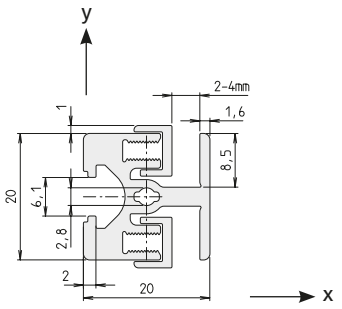

Area	185.50	mm²
I_x	0.69	cm⁴
I_y	0.71	cm⁴
W_x	0.69	cm³
W_y	0.79	cm³
Weight	500	g/m

Code No. Profile KLD 20x20			Anodised
E05000BBB	Cut to size	max. 3000 mm	Clear
E05000BBD	Bar	3000 mm	Clear

Code No. Corner joint	Type	lot sizes
E00041BHE	KLK 20x20	–

Clamping profile KLE 20x20



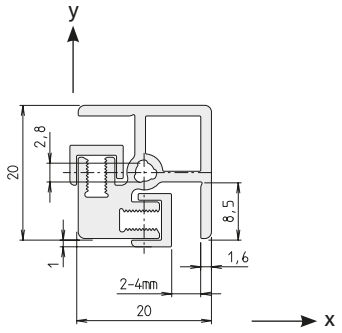

Area	170.90	mm²
I_x	0.67	cm⁴
I_y	0.67	cm⁴
W_x	0.64	cm³
W_y	0.71	cm³
Weight	462	g/m

Code No. Profile KLE 20x20			Anodised
E09000BBB	Cut to size	max. 3000 mm	Clear
E09000BBD	Bar	3000 mm	Clear

Code No. Corner joint	Type	lot sizes
E09035BHE	KLE 20x20	–

Special profiles / size 40

2x40



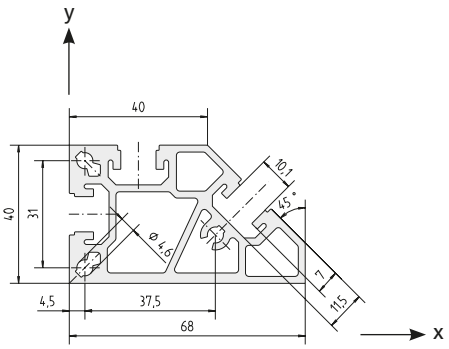

Area	838	mm²
I_x	14.2	cm⁴
I_y	32.8	cm⁴
W_x	7.9	cm³
W_y	11.3	cm³
Weight	2262	g/m

Code No. Profile 2x40			Anodised
4155000	Cut to size	max. 6000 mm	Clear
4155001	Bar	6000 mm	Clear

3x40



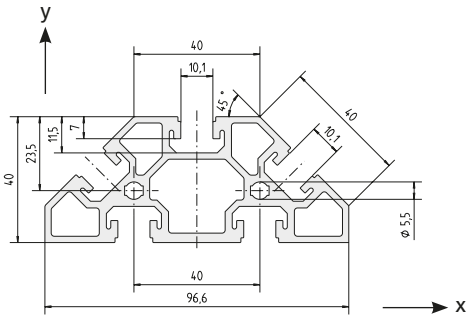

Area	1019	mm²
I_x	14.8	cm⁴
I_y	68.2	cm⁴
W_x	8.8	cm³
W_y	14.1	cm³
Weight	2751	g/m

Code No. Profile 3x40			Anodised
4255000	Cut to size	max. 6000 mm	Clear
4255001	Bar	6000 mm	Clear

8x40



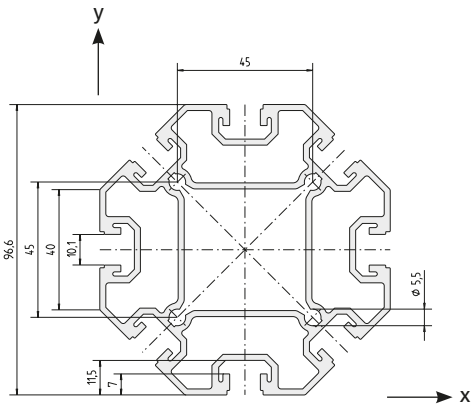

Area	1700	mm²
I_x	133.4	cm⁴
I_y	133.4	cm⁴
W_x	27.6	cm³
W_y	27.6	cm³
Weight	4590	g/m

Code No. Profile 8x40			Anodised
4055000	Cut to size	max. 6000 mm	Clear
4055001	Bar	6000 mm	Clear

Right-angle connections

Versions



Flange bracket connection



Slot stone -L/E-II



Hidden screw set -B-



Compatibility connector



Bracing plate



Connecting plate



Profile angle bracket



Angle bracket -cast-



Angle bracket -sheet steel-



Corner clamp WV



Corner joint

Table of contents

Connection techniques

Right-angle connections

Flange bracket connection ..... p. 220

Flange brackets ..... p. 222

Slot stone -L/E- ..... p. 224

Hidden screw set -B- ..... p. 224

Compatibility connector ..... p. 225

Bracing plate ..... p. 226

Connecting plate ..... p. 228

Profile angle bracket ..... p. 229

Angle brackets -cast- ..... p. 231

Angle brackets -sheet steel- ..... p. 234

Corner clamp WV ..... p. 235

Corner joint ..... p. 236

Right-angle connections

Flange bracket connection

- The flange bracket is the simplest and most cost-efficient method of connecting profiles.
- No additional machining necessary
- Direct fixing in the profile screw channels
- Direct insertion of RK expansion screws or standard DIN socket head cap screws
- Very stable
- Only a list of profile cut lengths is required
- Minimal effort required in construction
- Can be disconnected at any time



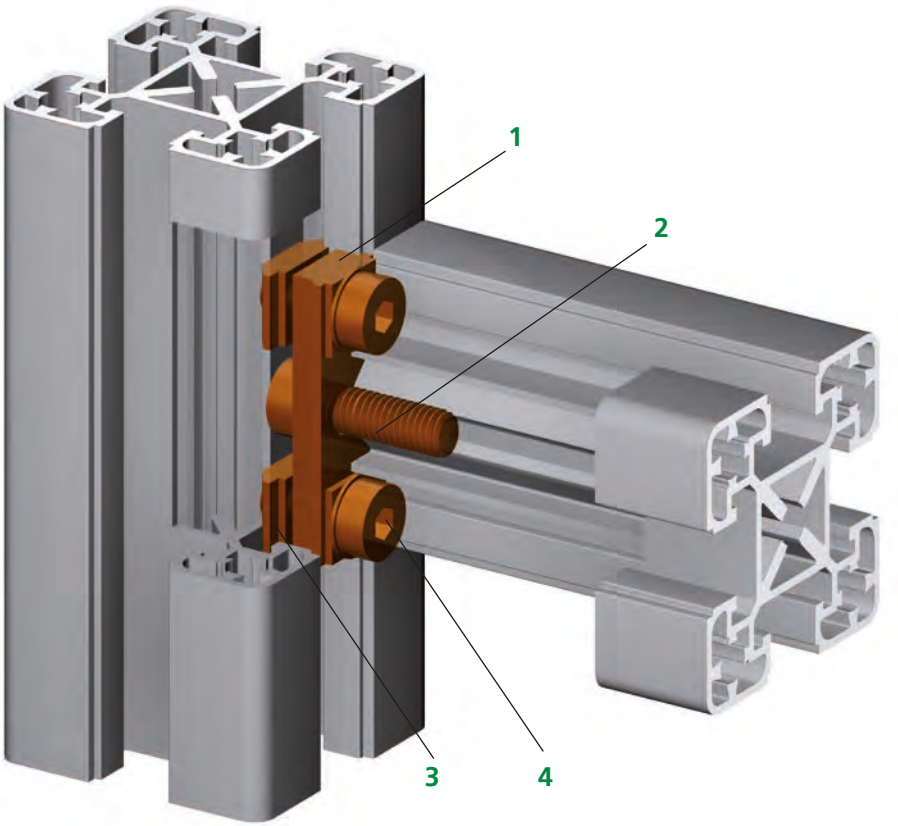

1. Flange bracket
2. Socket head cap screw/RK expansion screw
3. Slot stone with spring clip
4. Socket head cap screw

Position diagram

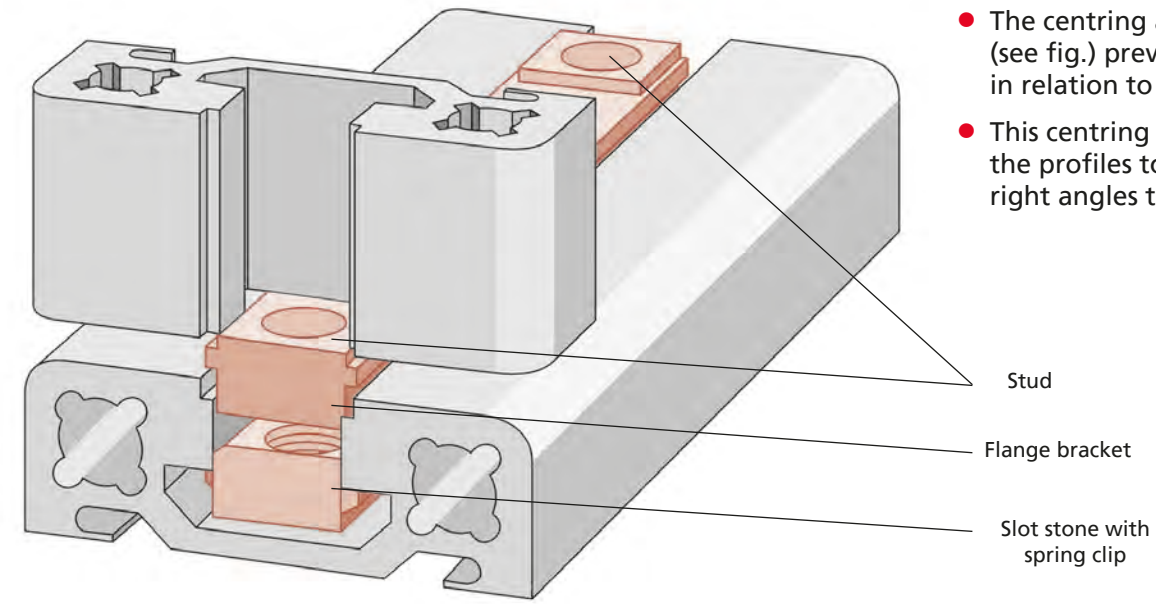

- The centring action of the studs (see fig.) prevent profile torsion in relation to one another
- This centring effect also allows the profiles to be assembled at right angles to each other.

Profile 1

Profile 2

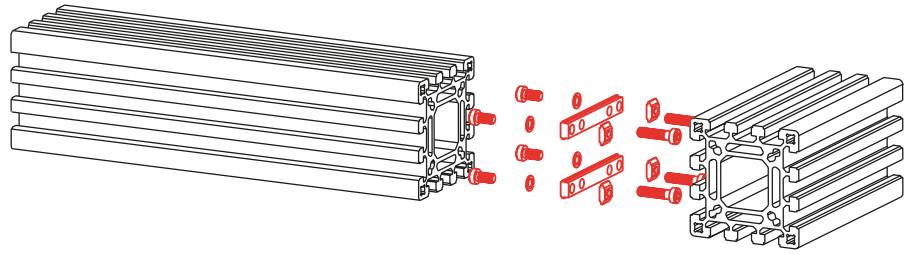

Step 1
Insert flange bracket (studs engage in profile slots) into profile 1 and fix with hexagon socket screws
Self-centred by studs
Cutting oil and using a drill make it easier to insert the screws.

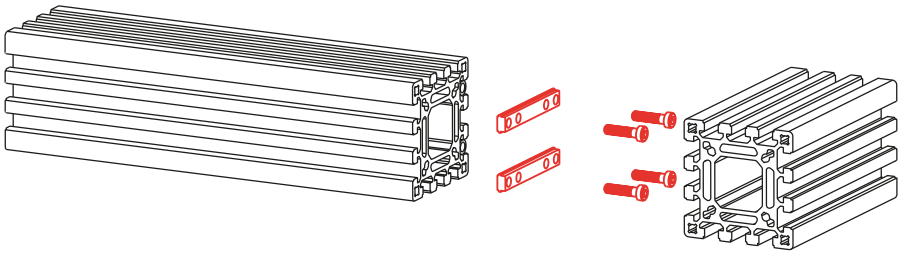

Step 2
Slide/insert the slot stones with spring clip into profile 2 and slide them into the correct position.

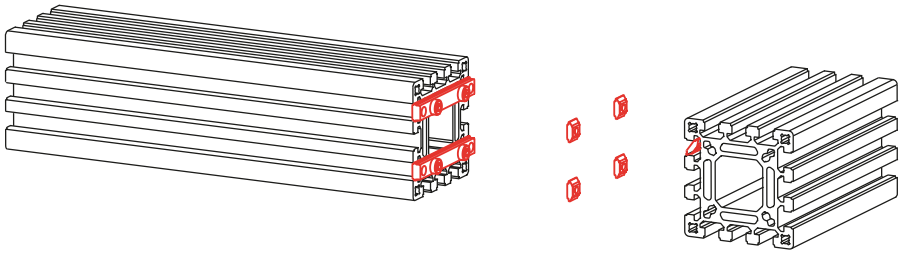

Step 3
Put the two profiles together and connect the flange bracket to the slot stones with spring clip.

Right-angle connections

Order instruction: flange bracket

- Purchase only in lot sizes and a multiple of that see product table below
- Each Code No. includes one flang bracke and fastenings.

Material: zinc plated

Flange brackets

- For static loads
- Depending on the orientation of the connection (longitudinal or transverse), the appropriate number of flange brackets must be ordered.

Image:
Material: zinc plated



Code No.	Type	lot sizes	To slot geom.	For profile (quantity required per connection)
4386704	15	–	30	15x40 (2), 15x60 (2), 15x80 (2), 15x120 (2), 15x160 (2)
4386705	15	–	40	15x40 (2), 15x60 (2), 15x80 (2), 15x120 (2), 15x160 (2)
4566700	40 (K)	10, 20, 30... pcs	30	F-G 40x40 (1x), F-GG 40x40 (1x), F-3G 40x40 (1x)
4566701	40 (K)	10, 20, 30... pcs	40	F-G 40x40 (1x), F-GG 40x40 (1x), F-3G 40x40 (1x)
4546700	40 (N)	–	40	F-G 40x40 (1x), F-G 40x80 (1x), F-GG 40x40 (1x), F-3G 40x40 (1x), F-GG 40x80 (2x)
4A66700	50 (N)	–	40	F-G 50x50 (1x), F-GG50x50 (1x), F-3G 50x50 (1x)
4A26700	60 (N)	–	40	F-G 60x60 (1x), F-2G 60x60 (1x), F-3G 60x60 (1x)
4586702	80 (EL)	–	40	F-GG 40x80 (1x), F-G 80x80 (2x), F-GG 80x80 (2x), F-3G 80x120-A (2x)
4586703	80 (N)	–	40	F-G 80x80 (2x), F-GG 80x80 (2x)
4966700	120 (A)	–	40	F-3G 80x120-A (2x)

Flange bracket “extra long” (EL) for larger profile cross-sections

Image:
Material: zinc plated



Code No.	Type	lot sizes	To slot geom.	For profile (quantity required per connection)
4306709	30	10, 20, 30... pcs	30	F-G 30x30 (1x), F-2G 30x30 (1x)
4306710	30	10, 20, 30... pcs	40	F-G 30x30 (1x), F-2G 30x30 (1x)
4106702	30 (K)	10, 20, 30... pcs	30	F-G 30x30 (1x) F-GG 30x30 (1x), F-3G 30x30 (1x), F-R 30 (1x)
4106703	30 (K)	10, 20, 30... pcs	40	F-G 30x30 (1x), F-GG 30x30 (1x), F-3G 30x30 (1x)
4816703	40	10, 20, 30... pcs	30	F-G 40x40 (1x), F-2G 40x40 (1x)
4086706	50	10, 20, 30... pcs	30	F-G 50x50 (1x), F-2G 50x50 (1x),
4086702	50	10, 20, 30... pcs	40	F-G 50x50 (1x), F-2G 50x50 (1x),
4226706	60	10, 20, 30... pcs	30	F-G 60x60 (1x), F-2G 60x60 (1x)
4226702	60	10, 20, 30... pcs	40	F-G 60x60 (1x), F-2G 60x60 (1x)
4316706	80	10, 20, 30... pcs	30	F-GG 40x80 (1x), F-G 40x80 (1x), F-G 80x80 , F-2G 80x80 (2x)

Flange slot stone -N- (N)

Image:
Material: zinc plated



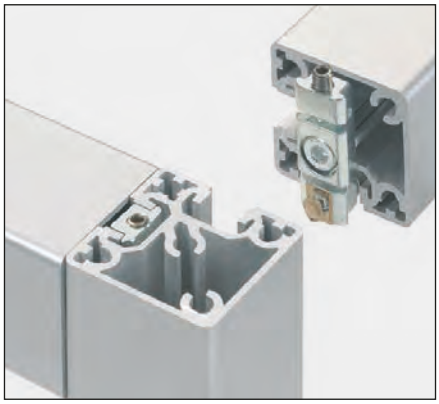

Flange brackets

Image:
Material: stainless steel



Material: stainless steel

Code No.	Type	lot sizes	To slot geom.	For profile (quantity required per connection)
4819702	40	–	40	F-40x40 (1x), F-40x40-L (1x), F-40x80 (2x), F-40x80-L (2x), F-40x80/3 (2x), F-40x120 (3x), F-40x160 (4x)
4249702	80	–	40	F-30x80 (1x), F-40x80 (1x), F-40x80-L (1x), F-40x80/3 (1x), F-80x80 (2x), F-80x80/2 (2x), F-80x80/2-L (2x), F-80x80-L (1x), F-80x120 (3x), F-80x160 (4x), F-80x160-L (4x)

Required number of flange brackets to fully assemble two profiles.

- With equipotential bonding

Image:
Material: zinc plated



- The -PA- slot stones have an equipotential bonding effect by destroying the anodised layer.

Material: zinc plated

Code No.	Type	lot sizes	To slot geom.	For profile (quantity required per connection)
4306c09	30	10, 20, 30... pcs	30	F-G 30x30 (1x), F-2G 30x30 (1x)
4816c02	40	10, 20, 30... pcs	40	F-G 40x40 (1x), F-2G 40x40 (1x)
4086c02	50	10, 20, 30... pcs	40	F-G 50x50 (1x), F-2G 50x50 (1x)
4226c02	60	10, 20, 30... pcs	40	F-G 60x60 (1x), F-2G 60x60 (1x)
4246c02	80	10, 20, 30... pcs	40	F-G 40x80 (1x), F-G 80x80, F-2G 80x80 (2x)

- For low dynamic loads (For RK expansion screw, please see page 263)

Image:
Material: zinc plated



Code No.	Type	lot sizes	To slot geom.	For profile (quantity required per connection)
4246700	80	10, 20, 30... pcs	40	F-G 80x80 (2x),

Required number of flange brackets to fully assemble two profiles.

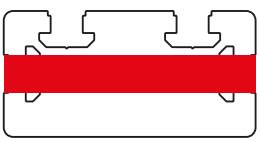

F-G 40x80 profile
Connection -long.-
(to 40 slot geometry) 1x
Code No. 4246c02

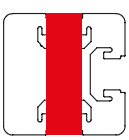

F-G 40x40 profile
Connection -transverse-
(to 40 slot geometry) 1x
Code No. 4816c02

Right-angle connections

Order instruction:

- Purchase only in lot sizes and a multiple of that see product table below

- The greater supporting surface reduces the surface pressure
- In the flange bracket sets, the standard -F- slot stones can be replaced by -L/LE- slot stones with hole.

Material: Galvanised steel

Slot stone -L/E- II
(with hole)

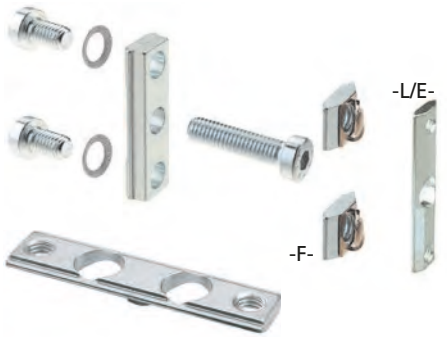

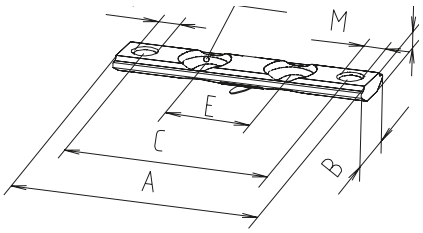

Only have one hole:
Slot stones -L- II types M5 / 29, M6 / 38
Slot stone -E- II type M6 / 38

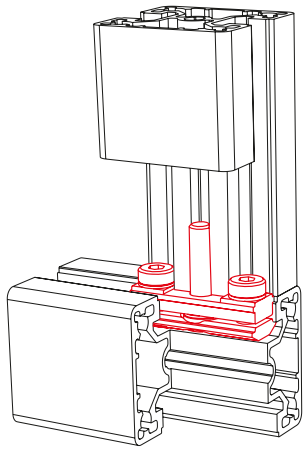

[mm]

Code No.	Type	lot sizes	Slot geom.	A	B	C	D	E	F	M
Slot stone -L- II										
4006207	M5 / 29	10, 20, 30... pcs	30	29	12	21.5	4	0	8.5	M5
4016206	M6 / 38	10, 20, 30... pcs	40	38	14	28	4	0	10.2	M6
4016207	M6 / 48	10, 20, 30... pcs	40	48	14	38	4	15.5	10.2	M6
4016208	M6 / 58	10, 20, 30... pcs	40	58	14	48	4	20	10.2	M6
4046206	M6 / 78	10, 20, 30... pcs	40	78	14	68	4	40	10.2	M6
Slot stone -E- II (slide-in)										
4006224	**M6 / 38**	10, 20, 30... pcs	40	38	16.5	28	3.8	0	10.2	M6
4006239	**M6 / 58**	10, 20, 30... pcs	40	58	16.5	48	3.8	15.5	10.2	M6
4006240	**M6 / 78**	10, 20, 30... pcs	40	78	16.5	68	3.8	40	10.2	M6

Hidden screw set -B- (shoulder screw)

- Cost-effective connection technique for profiles with 30 and 40 slot geometry.
- Self-tapping – Threading not required

Material: Galvanised steel



Ø 6 mm hole

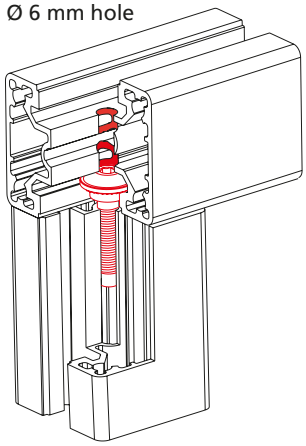

Assembly:

1. Drill a 6 mm hole (e.g. with RK drilling fixture) at the required position in the crossing profile.
2. Insert the hidden screw into the profile slot as far as the hole.
3. Insert T-handle key through the hole and into the shoulder screw and screw the two profiles to one another.

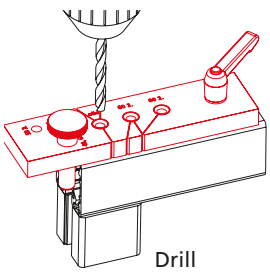

Drill

Code No.	Type	lot sizes	Type
4576510	F-30x30	10, 20, 30... pcs	Hidden screw -B- M5x25
4816510	F-40x40		Hidden screw -B- M6x30
4016516	–	–	Drilling fixture for hidden scrwe -B-

Compatibility connector 40

- The compatibility connector allows BLOCAN® profiles to be connected to aluminium profiles of other manufacturers.

Material: Galvanised steel

Includes:
2 connectors with fastenings

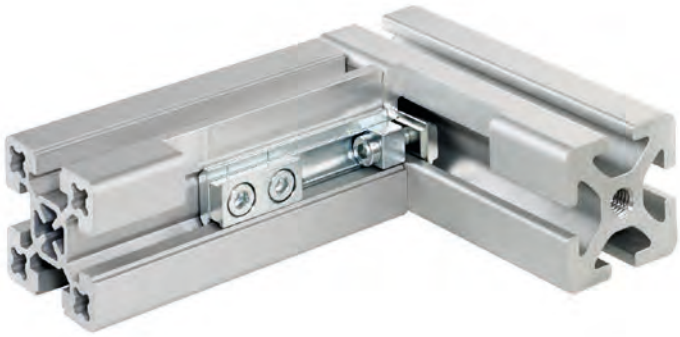



Code No.	Type	Suitable for slot widths
4016581	Compatibility connector 40	8, 10, 14 mm

Position diagram

RK profile, 40 slot geometry

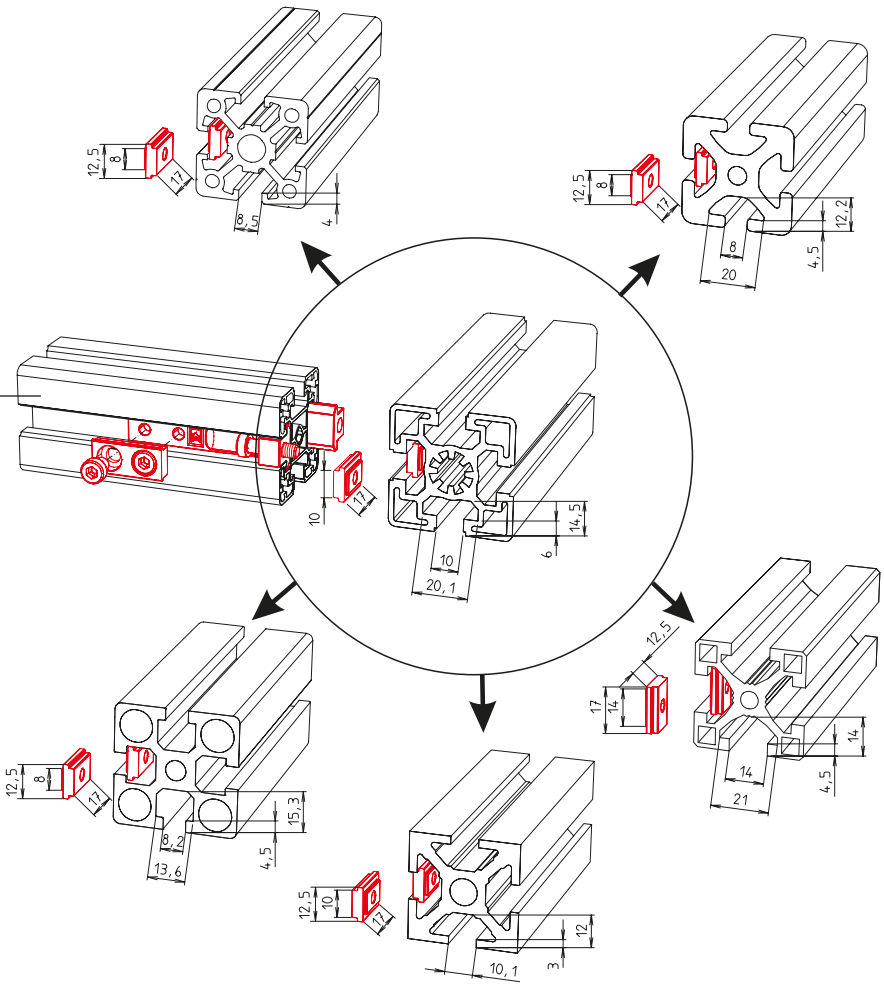

Right-angle connections

Bracing plates

Features:

- Superficial bracing of the three most important junctions L, T, X
- Panels and wire mesh do not need to be notched, as is usually the case with angle brackets.

Material:
black powder-coated steel or grey powder-coated steel

Fixing material
galvanised fastenings

Includes: Bracing plate complete with fixing sets

grey RAL 9006



black RAL 9005



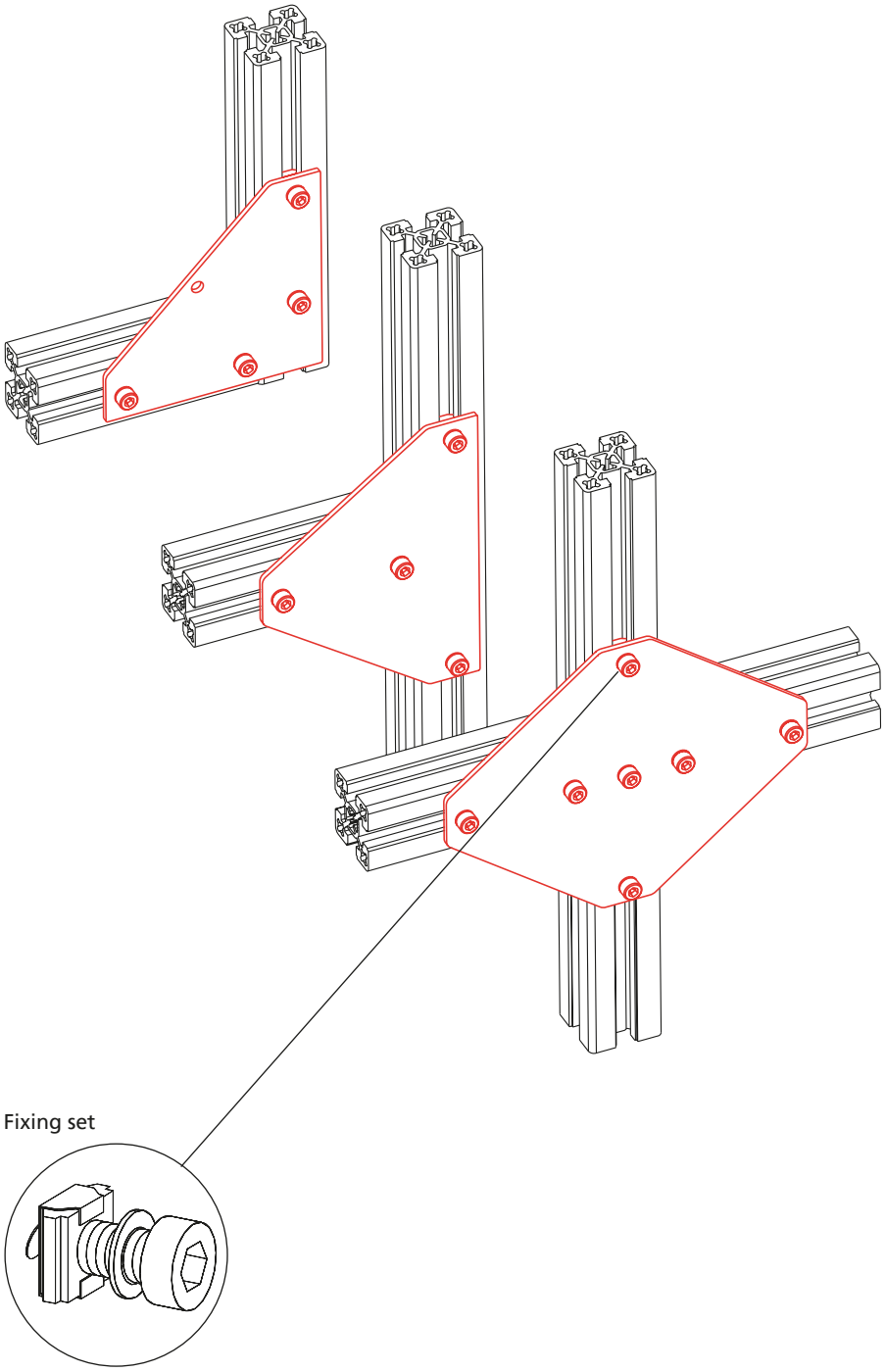

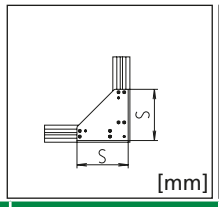

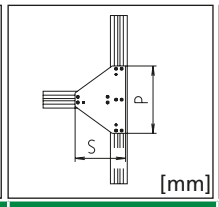

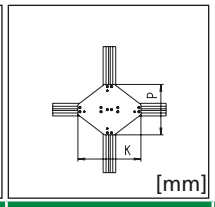

Code No.	Type	Wall thickness	Type L	Type T	Type X	colour
4002113	30x30	3 mm	S = 90			grey
4002183	30x30	3 mm		S = 90 / P = 120		grey
4002111	30x30	3 mm	S = 90			black
4002181	30x30	3 mm		S = 90 / P = 120		black
4002191	30x30	3 mm			P = 120 / K = 150	black
4012113	40x40	3 mm	S = 120			grey
4012183	40x40, 40x40-L	3 mm		S = 120 / P = 160		grey
4012111	40x40, 40x40-L	3 mm	S = 120			black
4012181	40x40, 40x40-L	3 mm		S = 120 / P = 160		black
4012191	40x40, 40x40-L	3 mm			P = 160 / K = 200	black
4082113	F-50x50, F-50x50-L	4 mm	S = 150			grey
4082183	F-50x50, F-50x50-L	4 mm		S = 150 / P = 200		grey
4082111	F-50x50, F-50x50-L	4 mm	S = 150			black
4082181	F-50x50, F-50x50-L	4 mm		S = 150 / P = 200		black
4082191	F-50x50, F-50x50-L	4 mm			P = 200 / K = 250	black
4122113	F-60x60	4 mm	S = 180			grey
4122183	F-60x60	4 mm		S = 180 / P = 240		grey
4122111	F-60x60	4 mm	S = 180			black
4122181	F-60x60	4 mm		S = 180 / P = 240		black
4122191	F-60x60	4 mm			P = 240 / K = 300	black
4222113	F-60x60-L, F-60x60/1	4 mm	S = 180			grey
4222183	F-60x60-L, F-60x60/1	4 mm		S = 180 / P = 240		grey
4222111	F-60x60-L, F-60x60/1	4 mm	S = 180			black
4222181	F-60x60-L, F-60x60/1	4 mm		S = 180 / P = 240		black
4222191	F-60x60-L, F-60x60/1	4 mm			P = 240 / K = 300	black
4242113	F-80x80-L	4 mm	S = 240			grey
4242183	F-80x80-L	4 mm		S = 240 / P = 320		grey
4242111	F-80x80-L	4 mm	S = 240			black
4242181	F-80x80-L	4 mm		S = 240 / P = 320		black
4242191	F-80x80-L	4 mm			P = 320 / K = 400	black
4042113	80x80, F-80x80/2-L, F-80x80/2	4 mm	S = 240			grey
4042183	80x80, F-80x80/2-L, F-80x80/2	4 mm		S = 240 / P = 320		grey
4042111	80x80, F-80x80/2-L, F-80x80/2	4 mm	S = 240			black
4042181	80x80, F-80x80/2-L, F-80x80/2	4 mm		S = 240 / P = 320		black
4042191	80x80, F-80x80/2-L, F-80x80/2	4 mm			P = 320 / K = 400	black

Bracing plates 60x120 and 80x160 (black) Typ L, T, X on request.
Bracing plates Type L, T, X aluminium on request.

Right-angle connections

Connecting plate



Slot stone -N-

For, e.g., 60x120

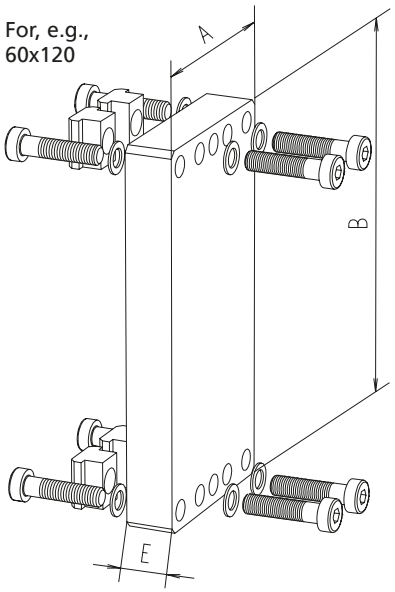

- The connecting plates allow profiles to be fixed in the profile slots at the sides.

Material: Aluminium, galvanised steel fastenings
Includes: Connecting plate complete with accessories

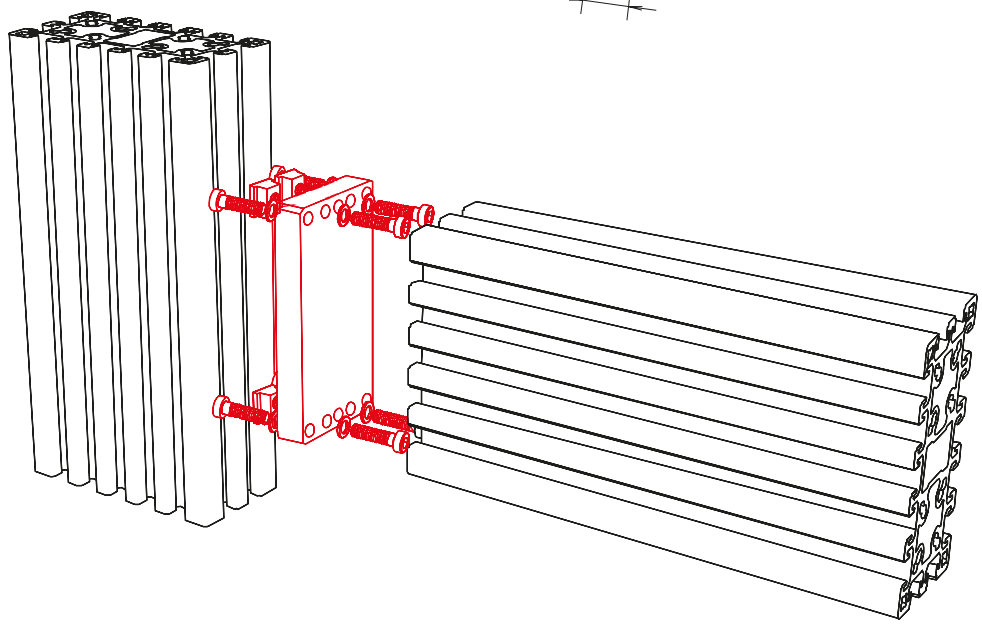

Code No.	Type	A	B	E
Connecting plate connection – face-to-slot				
4645411	F-40x120	40	120	15
4655411	F-40x160	40	160	15
4085412	F-50x50, F-50x50-L, F-G/2G 50x50	50	50	15
4665411	F-50x100	50	100	15
4675411	F-50x200	50	200	15
4225412	F-60x60-L, F-60x60/1, F-G/2G 60x60	60	60	15
4125412	F-60x60	60	60	15
4065411	F-60x120	60	120	15
4035412	F-40x80, F-40x80/3	40	80	15
4045412	F-80x80, F-G/2G 80x80	80	80	15
4245412	F-80x80-L	80	80	15
4685411	F-80x120	80	120	15
4075411	F-80x160	80	160	15
4695411	F-100x100	100	100	15

Profile angle bracket
Bar material

- Made from aluminium extruded profiles.
- With integrated screw channel for fastening panels.

Material: Aluminium.
Non-anodised bar
Angle tolerance 90°±5'.
Fixing sets:
The angle brackets can be screwed to the profile with the fixing sets.

Further slot stone versions can be found on page 254

Includes:
1 screw with washer and slot stone.

Size 1



Size 2



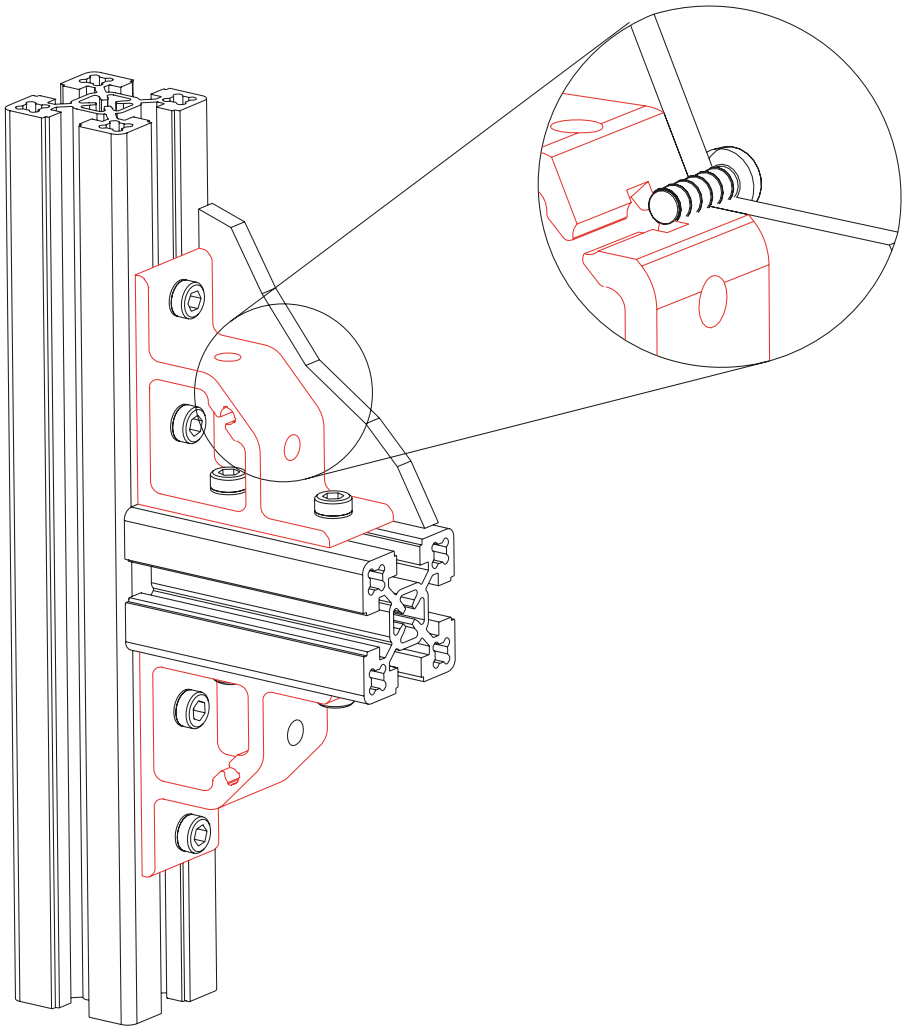

For dimension table, please see opposite page

Code No.				
4010102	Size 1	Cut to required length	max. 3000 mm	Non-anodised
4010103		Bar	3000 mm	Non-anodised
4030102	Size 2	Cut to required length	max. 3000 mm	Non-anodised
4030103		Bar	3000 mm	Non-anodised

Right-angle connections

Order instruction:

- Purchase only in lot sizes and a multiple of that see product table below

Profile angle bracket, size 1



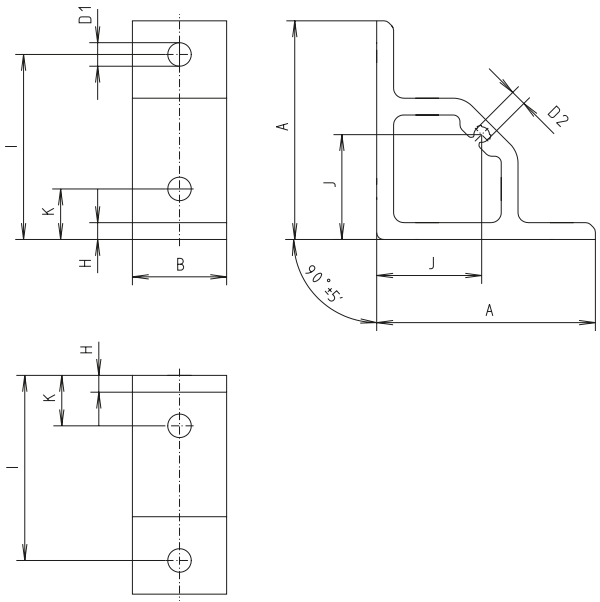

Profile angle bracket, size 2

Figure shows type 40



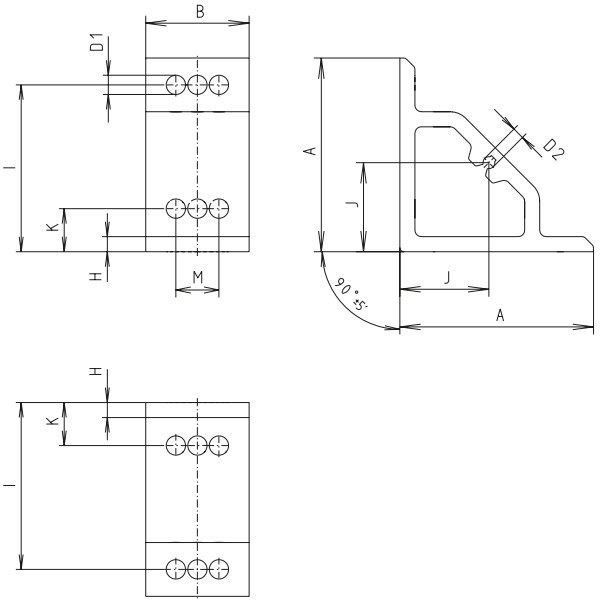

[mm]

Code No.	Type	Version	A	B	D1	D2	H	I	J	K	M
4015101	40	Size 1	64.15	28	7	4.65	4.15	55	30.3	20	–
4085101	50	Size 1	64.15	38	7	4.65	4.15	55	30.3	15	–
4035101	40	Size 2	89.3	28	9	5.55	6.3	77.5	40.65	20	–
4125101	60	Size 2	89.3	48	9	5.55	6.3	77.5	40.65	20	20
4145101	80	Size 2	89.3	68	9	5.55	6.3	77.5	40.65	20	40

Code No.	Size	Version	lot sizes
Fixing sets (1 slot stone with screw, washer)			
4015105	1	M6x16, slot stone -N-	10, 20, 30... pcs
4035110	2	M8x18, slot stone -N-	10, 20, 30... pcs
4015106	1	M6x16, slot stone -K-	10, 20, 30... pcs
4035111	2	M8x18, slot stone -K-	10, 20, 30... pcs
4015107	1	M6x16, slot stone -R-	10, 20, 30... pcs
4035112	2	M8x18, slot stone -R-	10, 20, 30... pcs

Angle bracket -cast-

Material: Gravity die-cast aluminium

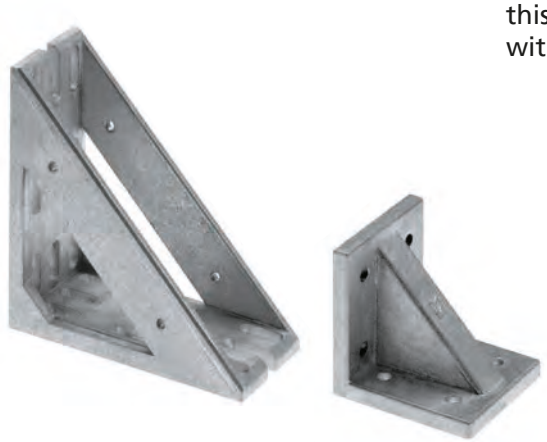

Material: Die-cast zinc



- A centring rib simplifies assembly and prevents angle bracket torsion. If necessary, this rib can be bent with a pliers.

Centring rib

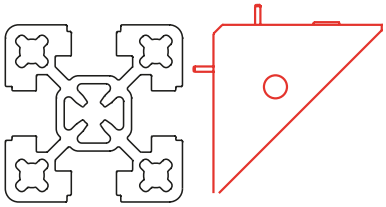

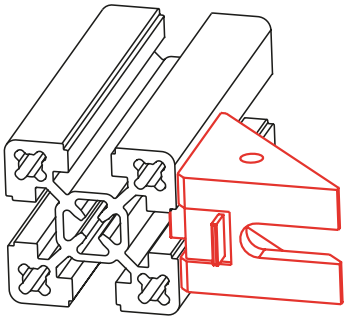

Angle bracket along the profile
Angle bracket is centred in the profile slot and prevents torsion.

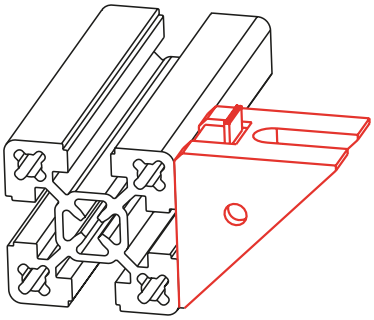

Angle bracket perpendicular to the profile
Centring rib must be bent

Plastic cover for angle brackets

- For aethetic effect or to protect against soiling, plastic covers may be placed on the angle brackets.

Material:
Black plastic



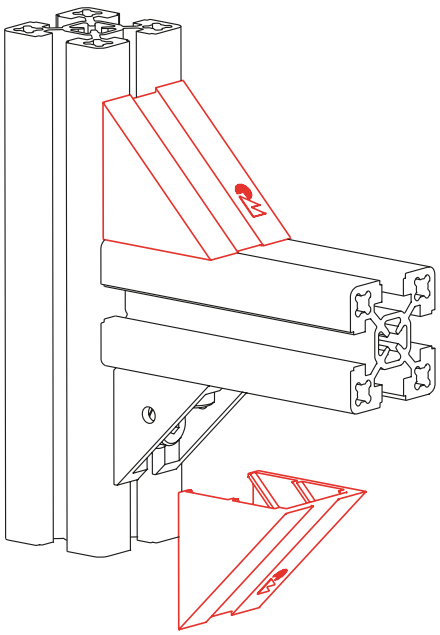

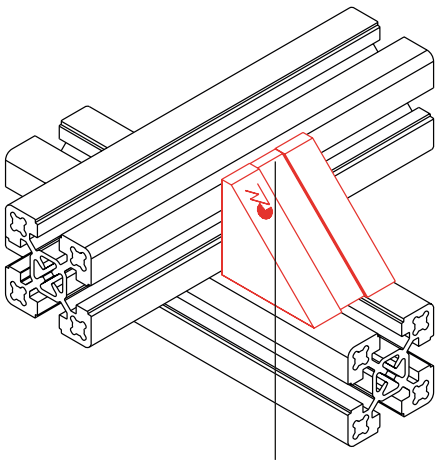

One side with chamfer for crossing connection with one angle bracket 40x40-2

Code No.	Type	lot sizes
4008101	For angle bracket 30x30 (2 braces)	10, 20, 30... pcs
4018102	For angle bracket 40x40 (2 braces)	10, 20, 30... pcs
4018103	For angle bracket 40x40 (2 braces) with chamfer for crossing connection	10, 20, 30... pcs
4028101	For angle bracket 50/60	10, 20, 30... pcs

Right-angle connections

Cast angle bracket

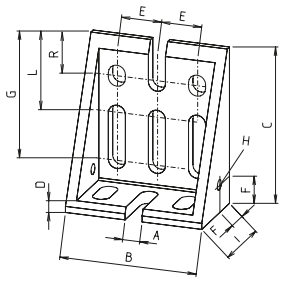

Angle bracket 80x40x80
Gravity die-cast aluminium

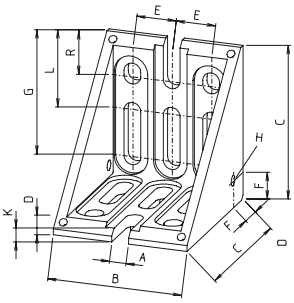

Angle bracket 80
Die-cast zinc

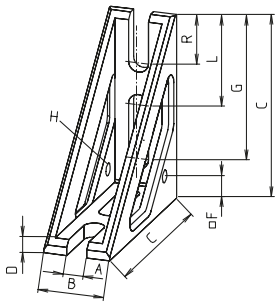

Angle bracket 40x80
Gravity die-cast aluminium

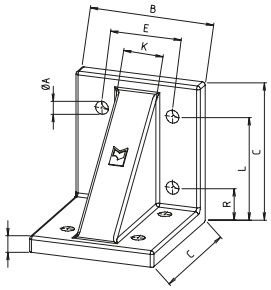

Angle bracket 100
Gravity die-cast aluminium

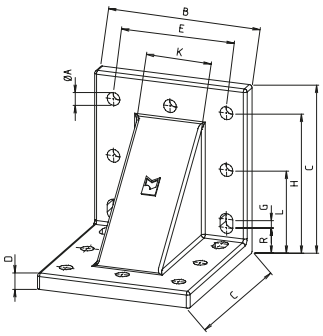

Angle brackets 120 + 160
Gravity die-cast aluminium

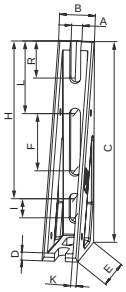

Angle bracket 40x80x160
Gravity die-cast aluminium

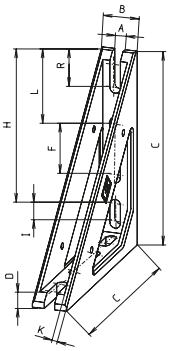

Angle bracket 40x160
Gravity die-cast aluminium

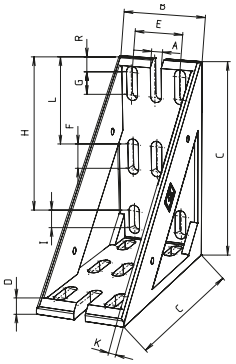

Angle bracket 80x160
Gravity die-cast aluminium

[mm]

Code No.	Type	Version	A	B	C	D	E	F	G	H	I	O	L	R	F [N]	M [Nm]	F [N]
Cast angle bracket																	
4044102	80x40x80	2 braces	8.5	68	78	6	20	14	61	5.2	38	–	38	19	3000/4300	180/200	4000/14700
4044101	80	2 braces	8.5	68	78	8	20	14	61	5.2	–	6	38	20	9200	550	14700
4034100	40x80	2 braces	8.5	28	78	6	–	14	61	5.2	–	–	38	20	1300	180	4600
4695100	100	–	9	88	98	11	50	–	–	–	–	28	75	25	8800	700	13200
4165100	120	–	9	108	118	11	80	–	5	100	–	46	60	20	14500	1200	21750
4014100	40x80x160	2 braces	8.5	28	158	6	78	45	–	123	15	4	56	28	1600/2500	180	–
4654100	40x160	2 braces	8.5	28	158	11	–	45	–	123	15	4	56	28	2500	250	–
4444100	160	–	9	148	158	11	120	–	5	140	–	78	80	20	16800	1700	25200
4074100	80x160	2 braces	9	68	158	11	40	20	18	95	15	5.5	70	12	12800	1500	19200

Order instruction:

- Purchase only in lot sizes and a multiple of that see product table below

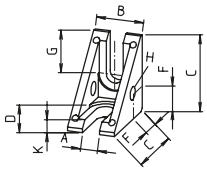

Angle brackets 30 + 40
Die-cast zinc

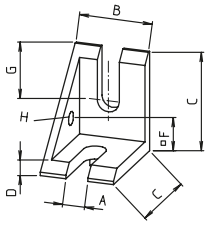

Angle bracket 40-1
Die-cast zinc

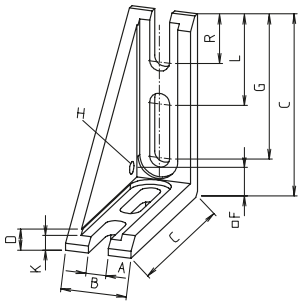

Angle bracket 40x80-1
Die-cast zinc

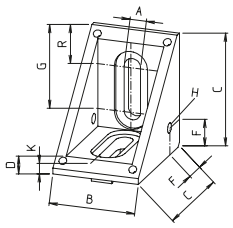

Angle bracket 50/60
Die-cast zinc

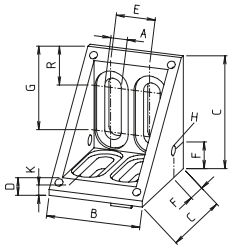

Angle bracket F-60x60
Die-cast zinc

[mm]

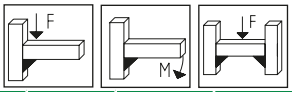

Code No.	Type	lot sizes	Version	A	B	C	D	E	F	G	H	I	O	L	R	F [N]	M [Nm]	F [N]
Cast angle bracket																		
4004101	30	10, 20, 30... pcs	2 braces	6.5	18	29	5	–	10	15	5.2	–	4	–	–	1100	20	2600
4014101	40-1	10, 20, 30... pcs	1 brace	8.4	28	38	5	–	14	19	5.2	–	–	–	–	2200	45	4000
4014102	40	10, 20, 30... pcs	2 braces	8.4	28	38	5	–	14	19	5.2	–	–	–	–	2200	60	4000
4034101	40x80-1	10, 20, 30... pcs	1 brace	8.5	28	78	8	–	14	61	5.2	–	6	38	20	3700	180	6500
4024101	50/60	10, 20, 30... pcs	2 braces	8.5	44	58	8	–	14	41	5.2	–	6	–	18	4500	280	8000
4124101	F-60x60	10, 20, 30... pcs	2 braces	8.5	48	58	8	20	14	40	5.2	–	6	–	17	4500	280	8000

Fixing sets

Fixing sets:
The angle brackets can be screwed to the profile with the fixing sets.

Material: Galvanised steel
Further slot stone versions can be found on page 254 - 262
Includes:
1 screw with washer and slot stone.



Fixing set with slot stone -N-
(Slot stone is slid into the slot from the side)



Fixing set with slot stone -K-
(Slot stone can be inserted edge-first into the slot retrospectively)



Fixing set with slot stone -R-
(Slot stone can be inserted into the slot retrospectively and twisted into position)

Code No.	Type	lot sizes	Version
Fixing sets			
4004110	30	10, 20, 30... pcs	M6x12, slot stone -N-
4026208	40	10, 20, 30... pcs	M8x16, slot stone -N-
4026202	50-80 + 40x80x160	10, 20, 30... pcs	M8x18, slot stone -N-
4694110	100-160 (except 40x80x160)	10, 20, 30... pcs	M8x22, slot stone -N-
4004111	30	10, 20, 30... pcs	M6x12, slot stone -K-
4014111	40	10, 20, 30... pcs	M8x16, slot stone -K-
4024111	50-80 + 40x80x160	10, 20, 30... pcs	M8x18, slot stone -K-
4694111	100-160 (except 40x80x160)	10, 20, 30... pcs	M8x22, slot stone -K-
4004112	30	10, 20, 30... pcs	M6x12, slot stone -R-
4026209	40	10, 20, 30... pcs	M8x16, slot stone -R-
4026210	50-80 + 40x80x160	10, 20, 30... pcs	M8x18, slot stone -R-
4694112	100-160 (except 40x80x160)	10, 20, 30... pcs	M8x22, slot stone -R-

Right-angle connections

Angle bracket -sheet steel-



Steel angle bracket:
St 37, 3 mm thick

Material:
Black powder-coated steel

Includes:
Complete with slot centring pins

Slot centring pins

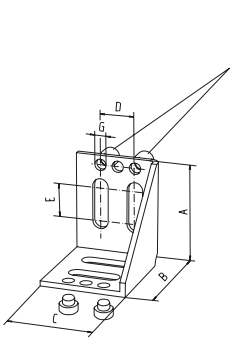

Steel angle bracket 60

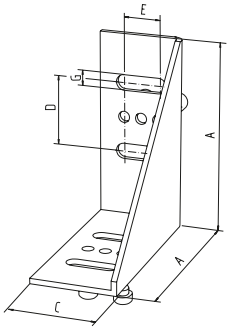

Steel angle bracket 60 / 60x120

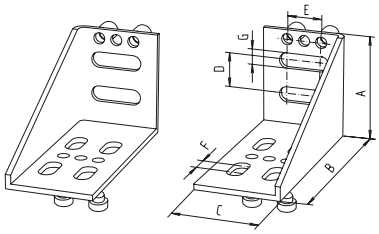

Steel angle bracket 60x120, 1 brace left or right

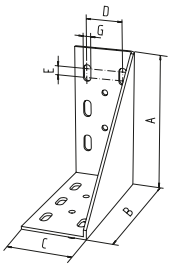

Steel angle bracket 80 / 80x160

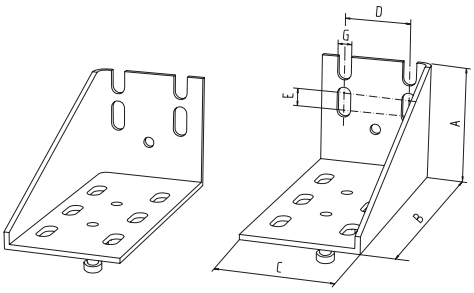

Steel angle bracket 80x160, 1 brace left or right

[mm]

Code No.	Type	Version	A	B	C	D	E	F	G	H	R
Steel angle bracket -3 mm sheet steel-											
4120101	60	1 brace	58	58	48	20	20	–	9	–	–
4060101	60/60x120	1 brace	108	108	48	20	20	–	9	–	–
4060102	60x120	1 brace right	58	108	48	40	20	10	9	–	–
4060103	60x120	1 brace left	58	108	48	40	20	10	9	–	–
4070101	80/80x160	1 brace	148	148	68	40	10	–	9	–	–
4070102	80x160	1 brace right	68	148	68	40	10	–	9	–	–
4070103	80x160	1 brace left	68	148	68	40	10	–	9	–	–

Order instruction:

- Purchase only in lot sizes and a multiple of that see product table below

Fixing sets

Fixing sets:
The angle brackets can be screwed to the profile with the fixing sets.

Material: Galvanised steel

Further slot stone versions can be found on page 254 - 262

Includes: 1 screw with washer and slot stone.



Fixing set with slot stone -N- (slot stone is slid into the slot from the side)



Fixing set with slot stone -K- (slot stone can be inserted edge-first into the slot retrospectively)



Fixing set with slot stone -R- (slot stone can be inserted into the slot retrospectively and twisted into position)

Code No.	Type	lot sizes	Version
Fixing sets			
4120110	All	10, 20, 30... pcs	M8x14, slot stone -N-
4120111	All	10, 20, 30... pcs	M8x14, slot stone -K-
4120112	All	10, 20, 30... pcs	M8x14, slot stone -R-

Corner clamp WV

Material: Aluminium. Fixing VA.
For further clamping elements, please refer to the catalogue "Connecting Technology"



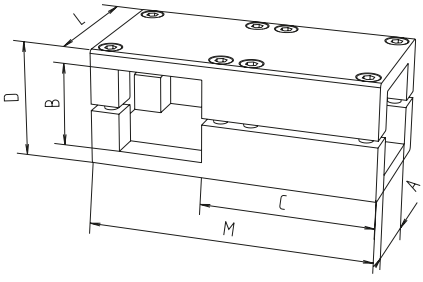

[mm]

Code No.	Type	Version	A	B	C	D	L	M
513000050300	WV 30	30.2	30.2	30.2	69	42	56	112
514000050300	WV 40	40.3	40.3	40.3	82	56	68	136
515000050300	WV 50	50.4	50.4	50.4	102	70	85	170
516000050300	WV 60	60.4	60.4	60.4	127	79	105	210

Right-angle connections

Order instruction:

- Purchase only in lot sizes and a multiple of that see product table below

Corner joint

- Connection element for right-angle connections for clamping and inserting profiles
- The fixing screws are inserted directly into the profile. Centring pins prevent profile torsion
- With versions KL/KLE, the screw holes can optionally be sealed with a plastic cap

Material:
Die-cast zinc, gravity die-cast aluminium (see table)

Includes:
Includes all parts required to fully assemble one corner joint



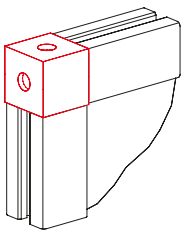

Version KL



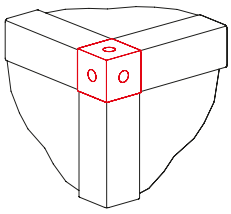

Version KLE

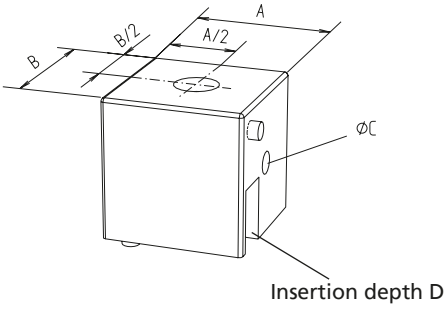



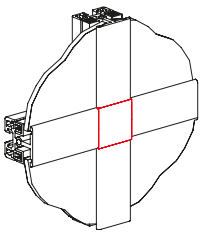

Version KLK



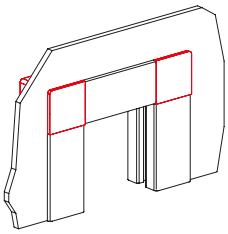

Version KLA



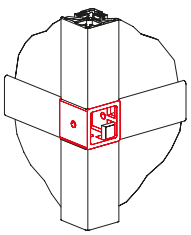

Version KLV

[mm]

Code No.	Type	lot sizes	For profile	A	B	C	D
Die-cast zinc							
4202409	KLA 30	4, 8, 12...pcs	KL,ESP,ESP-2	30	30	5,4	13
4212409	KLA 40	4, 8, 12...pcs		40	40	6,4	18
Gravity die-cast aluminium							
4202408	KLK 30	4, 8, 12...pcs	KLD	30	30	5,4	13
4212408	KLK 40	4, 8, 12...pcs	KLD	40	40	6,4	18
4202407	KLV 30	4, 8, 12...pcs	KLE,KLD	30	30	5,4	13
4212407	KLV 40	4, 8, 12...pcs		40	40	6,4	18

Code No.	Type	lot sizes	For profile	A	B	C	D
Die-cast zinc							
4202406	KL 30	4, 8, 12...pcs	KL,ESP,ESP-2, F-/G/GG/2G/3G	30	30	5,4	20
4212406	KL 40	4, 8, 12...pcs		40	40	6,4	27
4702406	KLE 30	4, 8, 12...pcs	KLE,F-/G/GG, 2G/3G	30	30	5,4	13
4712406	KLE 40	4, 8, 12...pcs		40	40	6,4	18
Stopper (black)							
40185971	KL/KLE 30	100, 200, 300... pcs	-				
40185981	KL/KLE 40	100, 200, 300... pcs					
Cap (black)							
4000421	KL 30	10, 20, 30... pcs	-				
4010421	KL 40	10, 20, 30... pcs					

Corner joint

- Connection element for assembling profile angle brackets and clamping profiles W*, KLW, KLE and KL
- The clamping bolts are inserted directly into the profile. Centring pins prevent torsion

Material:
Die-cast zinc, black powder-coated aluminium (see table)

Includes:
Includes all parts required to fully assemble one corner joint



Corner joint KLW



Corner joint KLWK

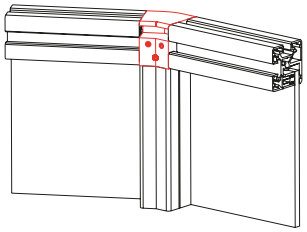

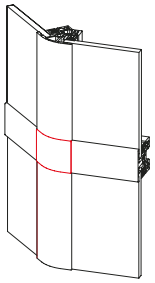

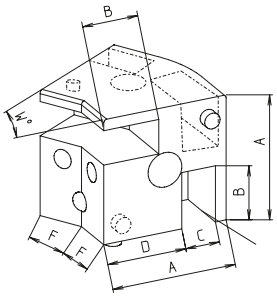

Insertion depth B

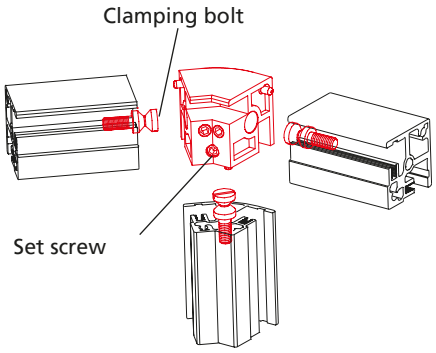

Assembly steps

1. Screw clamping bolt into profile
2. Put together with corner joint
3. Tighten set screw on corner joint – done!

*When using W-profiles, the corners of panels may have to be notched.

[mm]

Code No.	Type	For profile*	A	B	C	D	F	W
Die-cast zinc								
4412406	KLW 30-30	KLW 30-30, KL, KLE, ESP 30	30	13	8	19.5	11.0	30°
4422406	KLW 30-45	KLW 30-45, KL, KLE, ESP 30	30	13	8	19.5	8.8	45°
4622406	KLW 30-60	KLW 30-60, KL, KLE, ESP 30	30	13	8	19.5	8	60°
4432406	KLW 30-90	KLW 30-90, KL, KLE, ESP 30	30	13	8	19.5	10.0	90°
4472406	KLW 40-45	KLW 40-45, KL, KLE, ESP 40	40	18	11	25.5	11.7	45°
4632406	KLW 40-60	KLW 40-60, KL, KLE, ESP 40	40	18	11	25.5	11.5	60°
4482406	KLW 40-90	KLW 40-90, KL, KLE, ESP 40	40	18	11	25.5	15.0	90°
Black powder-coated aluminium								
4402406	KLW 30-15	KLW 30-15, KL, KLE, ESP 30	30	13	8	19.5	13.0	15°
4452406	KLW 40-15	KLW 40-15, KL, KLE, ESP 40	40	18	11	25.5	17.4	15°
4462406	KLW 40-30	KLW 40-30, KL, KLE, ESP 40	40	18	11	25.5	14.6	30°
4422407	KLWK 30-45	KLW 30-45, KLD 30	30	13	8	19.5	8.8	45°
4472407	KLWK 40-45	KLW 40-45, KLD 40	40	18	11	25.5	11.7	45°

Right-angle connections

Corner joint with plastic cap

- Connection element for edge profiles meeting at right angles R, W, KLW* and GG. The profiles are connected with the corner joint and screws
- To enhance the visual appeal of this point, it is sealed with a plastic cap
- Angle accuracy ±6'

Material:
Die-cast zinc corner joint, plastic cap, galvanised fastenings

Assembly instructions
R-30, W, GG-Profile:
Corner joint and profiles are connected with screws. The centring shoulders make assembly and alignment of the profiles easier. If the shoulders are not desired, they can be bent with a pliers. Seal the corner joint with a removable plastic cap.

*When using KLW-profiles, the corners of panels may have to be notched.



Corner cap

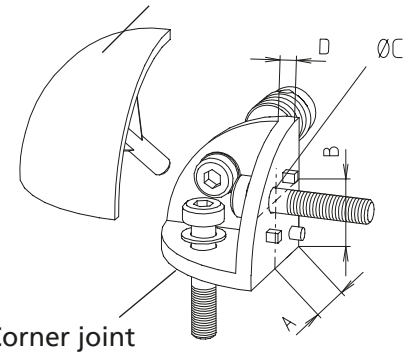

Corner joint

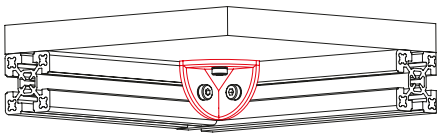

Corner joint as fixing element for the flush mounting of panels

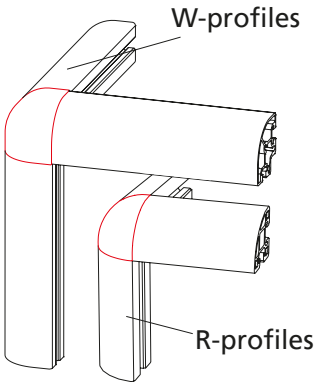

Corner connection with R, KLW or W-profiles

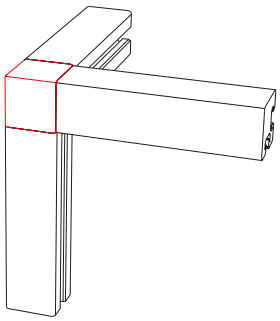

Corner connection with G-profiles

Order instruction:

- Purchase only in lot sizes and a multiple of that see product table below

[mm]

Code No.	Type	lot sizes	Profiles	A	B	Ø C	D
4554408	Complete corner joint, black	–	F-G/GG/2G/3G 30	15	15	5.4	3
4564408			F-G/GG/2G/3G 40, F-GG 40x80 (2x)	20	20	6.6	4.5
4104406			W/KLW 30 (90°)	20	20	5.5	3.5
4114406			W/KLW 40 (90°)	30	30	6.6	5
4104407	Corner joint -single component- (without cap and screws)	–	R, F-G/GG/2G/3G 30	15	15	5.4	3
4114407			R, F-G/GG/2G/3G 40, F-GG 40x80 (2x)	20	20	6.6	4.5
4104405			W/KLW 30 (90°)	20	20	5.5	3.5
4114405			W/KLW 40 (90°)	30	30	6.6	5

Code No.	Type	lot sizes	Profiles	A	B	Ø C	D
4104408	Complete corner joint, black	–	R 30	15	15	5.4	3
4100411	Corner cap -single component-	10, 20, 30... pcs	W/KLW 30 (90°)	-	-	-	-
4110411			W/KLW 40 (90°)	-	-	-	-

Code No.	Type	lot sizes	Profiles	Colour
4108421	Corner cap	10, 20, 30... pcs	R 30	RAL 9005
4108422				RAL 9006
4108423				RAL 7035
4108426				RAL 5005
4558421	Corner cap	10, 20, 30... pcs	F-G/GG/2G/3G 30	RAL 9005
4558422				RAL 9006
4568421	Corner cap	10, 20, 30... pcs	F-G/GG/2G/3G 40, F-GG 40x80	RAL 9005
4568422				RAL 9006

Black **RAL 9005**

White **RAL 9006**

Grey **RAL 7035**

Blue **RAL 5005**

Please note that, for typographical reasons, the colours illustrated here are only an approximation of the RAL colours.

Cross connections

Versions



Keyed clamp connector -Q-



Mitre joint -transversal-



Cross connector -swiveling-

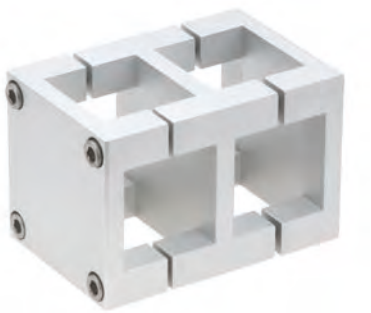

Cross clamp KV

Table of contents

Connection techniques

Cross connections

Keyed clamp connector -Q- ..... p. 242

Mitre joint -transversal- ..... p. 242

Cross connector -swiveling- ..... p. 243

Cross clamp KV ..... p. 243

Cross connections

Keyed clamp connector -Q-



- Simple realisation of cross connections by bracing the profiles
- No profile machining necessary

Material: Galvanised steel

Includes: Complete fixing set for one connection

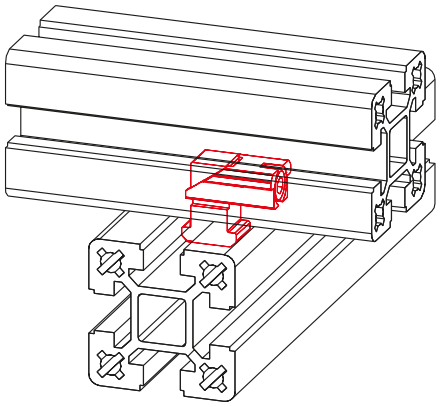

Code No.	Type
4016521	40 slot geometry

Mitre joint -transversal-

- For connecting crossing profiles
- For retrofitting in structures
- Profile alignment not necessary

Material: Galvanised steel

Includes: Complete fixing set for one connection



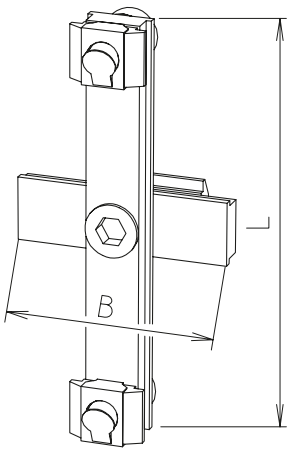

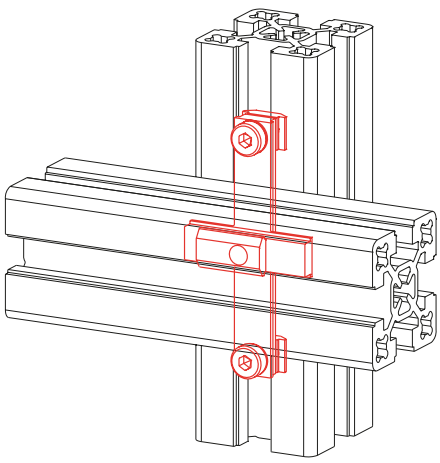

Code No.	Type	B	L	Version
4026502	F-60/80	40	102	With slot stone -F-
4026512	F-60/80	40	102	With slot stone -L-
4016502	40/50	40	78	With slot stone -F-
4016512	40/50	40	78	With slot stone -L-

Cross connector -swiveling-



- For connection of crossing profiles
- 360° swiveling
- Fixation in all positions

Material: Galvanised steel

Includes: Complete fixing set

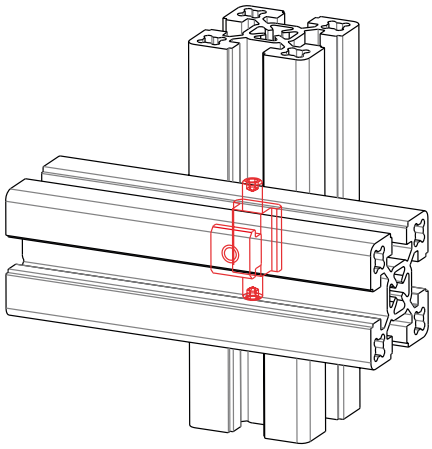

Code No.	Type	Piece
4016584	40 slot geometry	1
4016583		10

Cross clamp KV

Material: Aluminium,
Stainless steel fastenings.
For further clamping elements, please refer to the catalogue "Connecting Technology"

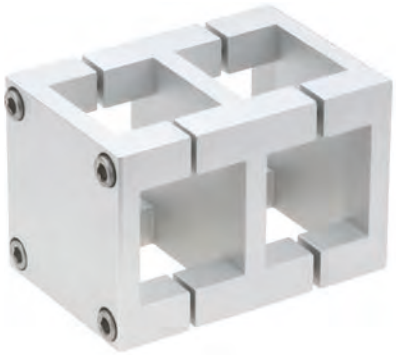

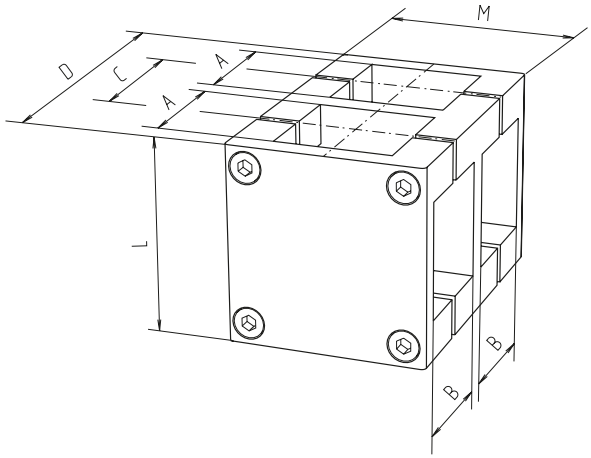

[mm]

Code No.	Type	A	B	C	D	L	M
503000050300	KV 30	30.2	30.2	36	78	56	56
504000050300	KV 40	40.3	40.3	48	104	68	68
505000050300	KV 50	50.4	50.4	60	130	85	85
506000050300	KV 60	60.4	60.4	72	169	105	105

Angle connections

Versions

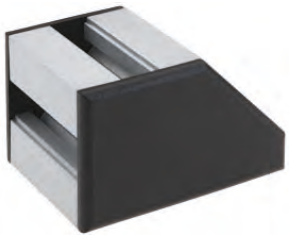

Frame joint 2x40



Frame joint 3x40



Profile joint -E-



Profile joint



Double profile joint



Mitre joint -W1-



Mitre joint -W2-



Steel swivel

Table of contents

Connection techniques

Angle connections

Frame joint 2x40 ..... p. 246

Frame joint 3x40 ..... p. 246

Profile joint -E- (eccentric) ..... p. 247

Profile joint ..... p. 248

Double profile joint ..... p. 248

Mitre joint -W1- ..... p. 249

Mitre joint -W2- ..... p. 249

Steel swivel ..... p. 250

Angle connections

Frame joint 2x40

- Frame joint with 2 connecting options 40x40 and/or 40x80, each set at 45°.
- Complete with fixing set.

Material: Aluminium,
Plastic cover plates, cut to size as required.

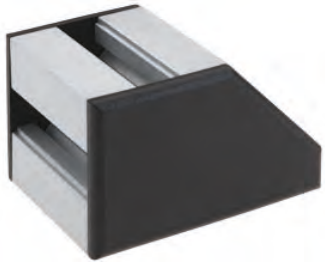

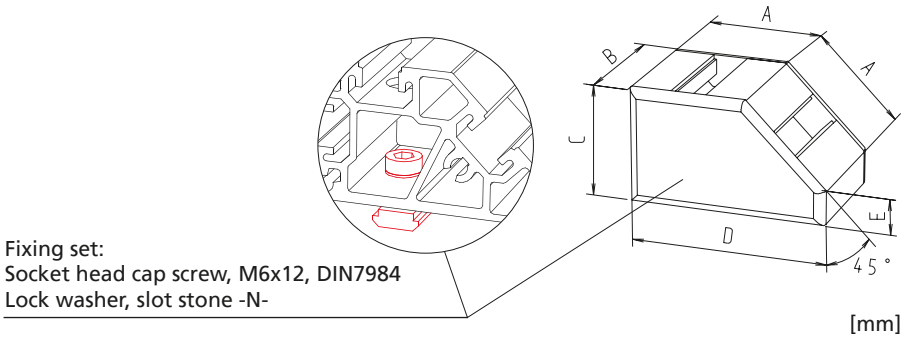

Fixing set:
Socket head cap screw, M6x12, DIN7984
Lock washer, slot stone -N-

[mm]

Code No.	Type	A	B	C	D	E
4155650	40	40	40	40	68	11.8
4155651	40x80	40	80	40	68	11.8

Frame joint 3x40

- Frame joint with 3 connecting options 40x40 and/or 40x80, each set at 45°.
- Complete with fixing set.

Material: Aluminium,
Plastic cover plates, cut to size as required.



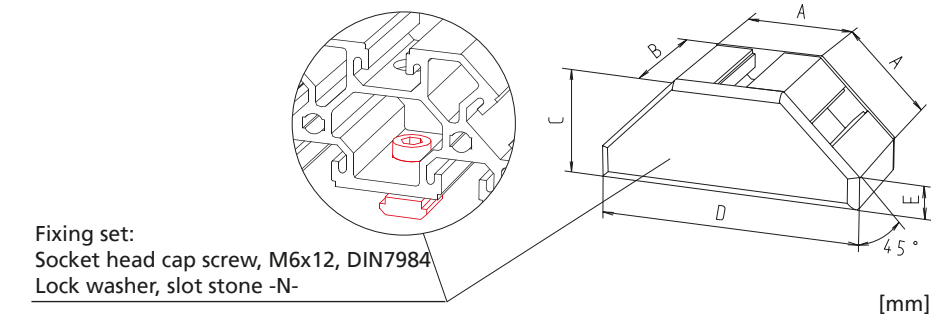

Fixing set:
Socket head cap screw, M6x12, DIN7984
Lock washer, slot stone -N-

[mm]

Code No.	Type	A	B	C	D	E
4255650	40	40	40	40	96.6	11.8
4255651	40x80	40	80	40	96.6	11.8

Position diagram

- With unsupported lengths and dynamic alternating stresses, bracing elements should be added because the material combination is steel aluminium.
- Such elements may be angle brackets, bracing plates and cross strut profiles as are typically used in framework.

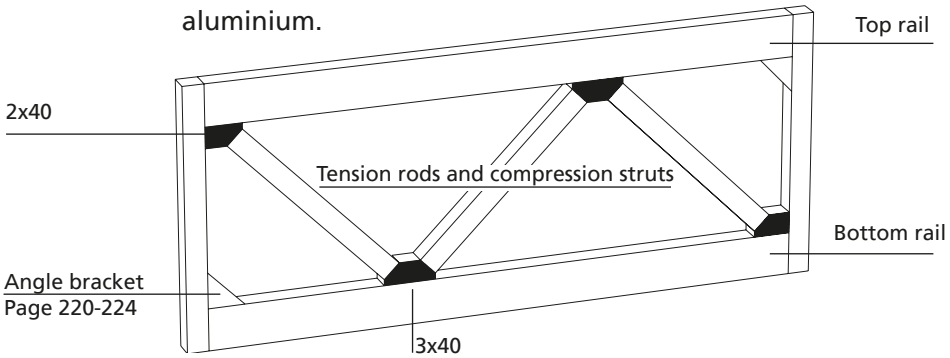

Profile joint -E-

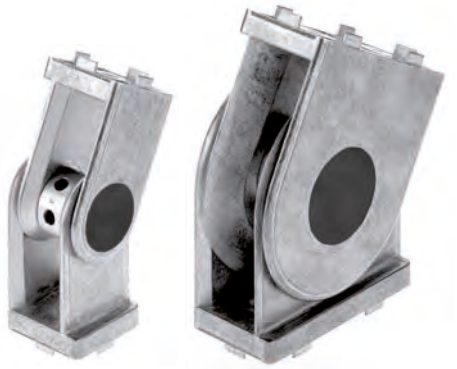

30x30 40x80

- These die-cast joints feature eccentric height compensation.

Material: Die-cast zinc joint, galvanised steel eccentric bolt and fastenings

Includes: Does not include fixing set (see table)

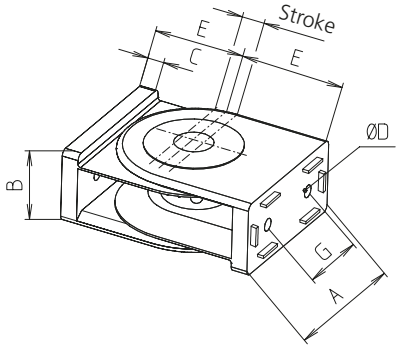

Code No.	Type	Pivoting range	Stroke	A	B	C	D	E	G
4032550	Joint 30x30	250°	4	30	30	8	6,1	42	0
4000530	Fixing set to 30 slot geometry								
4010530	Fixing set to 40 slot geometry								
4032540	Joint 40x80	180°	4	80	40	9	6,6	52	40
4010521	Fixing set to 40 slot geometry								
4810520	Fixing set on the face of Type 40								

Note: One fixing set contains material for connecting one profile.
For the profile joint 40x80, 2 fixing sets are required per side.

Attention: discontinued model
Type 30x30, Code No. 4032550
Type 40x80, Code No. 4032540

Profile joint



40x40



40x80

Material: joint 40x40 die casting zinc, joint 40x80 die-cast Aluminum, fixing material Galvanized steel

Includes:
centering pieces; does not include fixing set (see table)

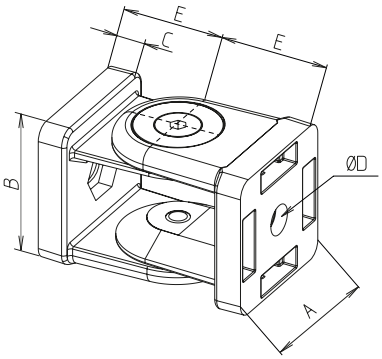

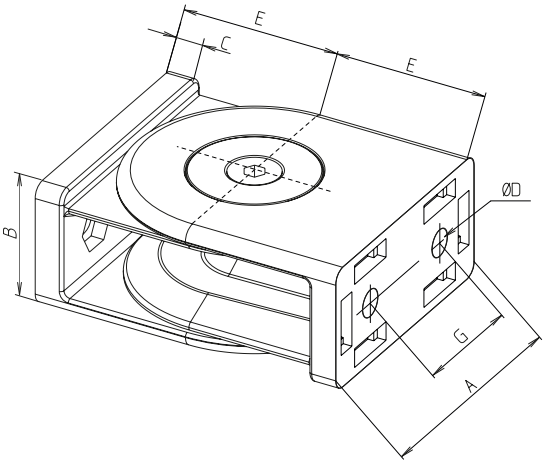

Code No.	Type	Pivoting range	A	B	C	D	E	G
4D32500	Profile joint 40x40	180°	40	40	9	8,5	30	-
4392500	Profile joint 40x80	180°	80	40	9	8,5	50	40
4572501	Fixing set to 30 slot geometry							
4D32501	Fixing set to 40 slot geometry							
4D32502	Fixing set front side for F-40x40, F-40x80, F-80x80							

Note: One fixing set contains material for connecting one profile.
For the profile joint 40x80, 2 fixing sets are required per side.

Angle connections

Profile joint

- Depending on the fixing set, the profile joint can be used with the profiles given below
- The joint can be infinitely adjusted through 180°.

Material: Aluminium
Includes:
Complete with fixing set (see table)

F-40, figure with slot-to-slot fxing set



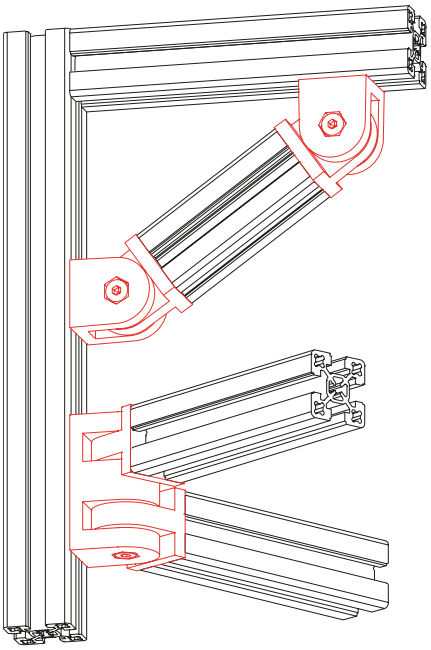

F-40

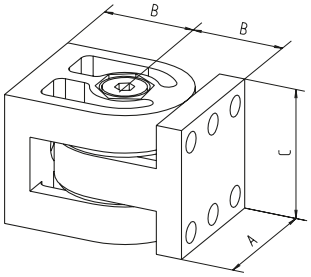

F-40x80

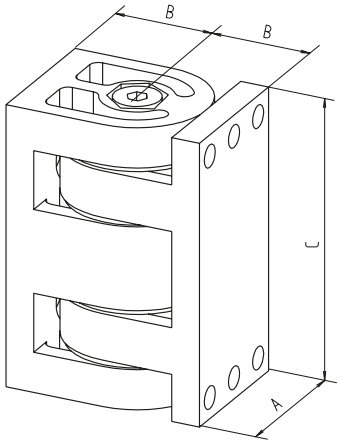

[mm]

Code No.	Type	Fixing set	A	B	C
4015550	Profile joint F-40	without fixing set	40	28	40
4015551		Face-to-face	40	28	40
4015552		Slot-to-slot	40	28	40
4015553		Face-to-slot	40	28	40
4035550	Profile joint F-40x80	without fixing set	40	28	80
4035551		Face-to-face	40	28	80
4035552		Slot-to-slot	40	28	80
4035553		Face-to-slot	40	28	80

Double profile joint

F-40x80-2, figure with face-to-slot fixing set



F-40x80-2

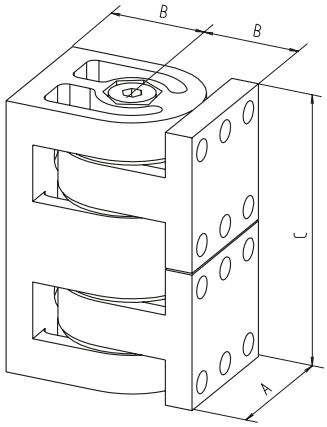

[mm]

Code No.	Type	Fixing set	A	B	C
4035555	Double profile joint F-40x80-2	without fixing set	40	28	80
4035556		Face-to-face	40	28	80
4035557		Slot-to-slot	40	28	80
4035558		Face-to-slot	40	28	80

Mitre joint -W1-

- Connects profiles at any angle
- No alignment necessary

Material: Galvanised steel
Includes: Complete fixing set for one mitre joint -W-



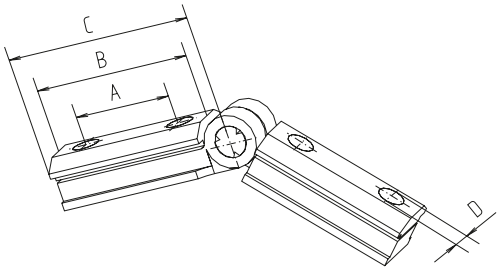

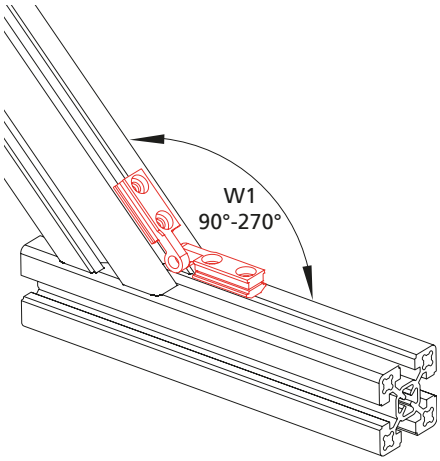

[mm]

Code No.	Type	Slot geometry	A	B	C	D
4016506	W-1	30	19	30	41	M4
4016504	W-1	40	19	30	41	M5

Mitre joint -W2-

Material: Galvanised steel

Includes: Complete fixing set for one mitre joint -W-



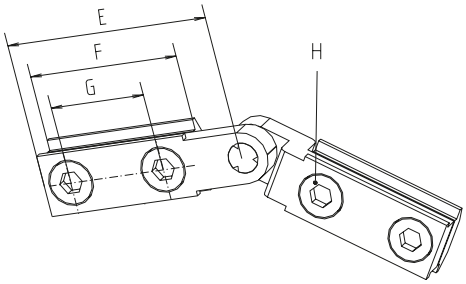

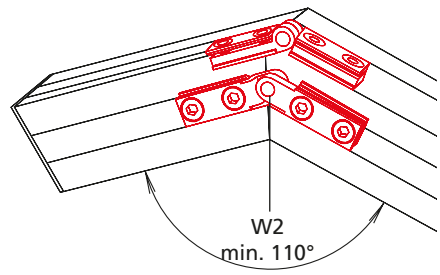

[mm]

Code No.	Type	Slot geometry	E	F	G	H
4016507	W-2	30	41	30	19	M4
4016505	W-2	40	41	30	19	M5

Angle connections

Steel swivel

- Using steel swivels enables structural profiles to be adjusted to any angle

Material: Galvanised steel
Includes: 1 steel swivel with one complete fixing set for one profile connection.
A clamping level can be ordered as an optional extra



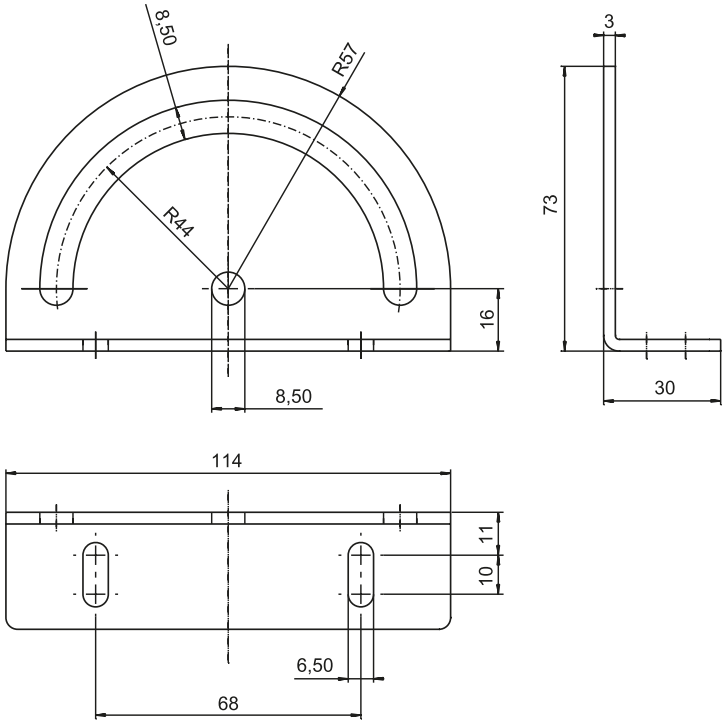

[mm]

Code No.	Type	Slot geometry
WAC042000144	Steel swivel with screw	40
WAC042000145	Clamping lever	40



Accessories

Versions



T-head bolt



Slot stone -F-



Slot stone -N-, -NF-



Slot stone -R-, -RF



Slot stone -L- II



Slot stone -E-, -E- II



Slot stone -K-



Slot stone -P- version K



Slot stone -PA-



Equipotential bonding cable

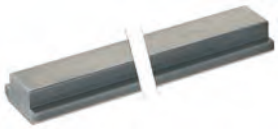

Bar material
slot stone -N-

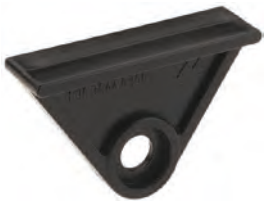

Suspended sliding block



Screws

Table of contents

Accessories

Slot stones and screws

T-head bolt ..... p. 254

Slot stone -F-..... p. 254

Slot stone -N-, -NF- ..... p. 255

Slot stone -R-, -RF- ..... p. 256

Slot stone -L- II ..... p. 257

Slot stone -E-/EII..... p. 257

Slot stone -K- ..... p. 258

Slot stone -P- version K (equipotential bonding) ..... p. 258

Slot stone -PA- (equipotential bonding)..... p. 259

Equipotential bonding cable..... p. 260

Bar material slot stone -N-..... p. 260

Suspended sliding block ..... p. 262

Screws ..... p. 263

Slot stones and screws

Order instruction:

- Purchase only in lot sizes and a multiple of that see product table below

T-head bolt

- For fixing mitre joints and angle brackets
- Can be inserted into any position in the profile slot
- The action of tightening turns it into the final clamping position

Material: Galvanised steel

Includes: Complete with nut and washer



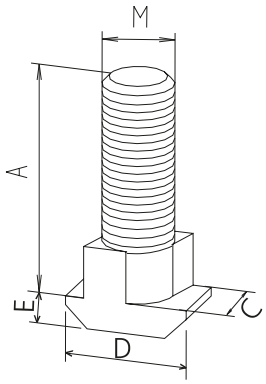

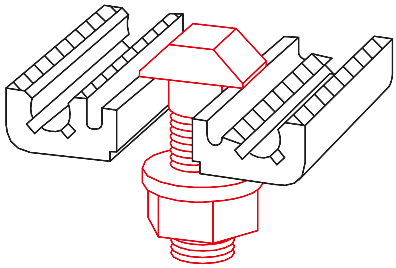

[mm]

Code No.	Type	lot sizes	Slot geometry	A	C	D	E	M
4016201	M8x25	10, 20, 30... pcs	40	25	9.8	15.5	4	M8

Slot stone -F-

- Simply slid/inserted edge-first into the profile slot
- Fixed in the desired position by the spring clip

Material: Galvanised steel



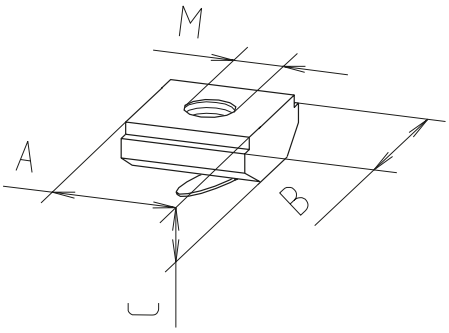

[mm]

Code No.	Type	lot sizes	Slot geometry	A	B	C	M
4006710	M3	10, 20, 30... pcs	30	10	12	4	M3
4006716	M4	10, 20, 30... pcs	30	10	12	4	M4
4006711	M5	10, 20, 30... pcs	30	10	12	4	M5
4006712	M6	10, 20, 30... pcs	30	10	12	4	M6
4006715	M4	10, 20, 30... pcs	40	10	14	4	M4
4006713	M5	10, 20, 30... pcs	40	10	14	4	M5
4006714	M6	10, 20, 30... pcs	40	10	14	4	M6

Slot stone -N-

- This slot stone slides into the end of the profile slot

Material: Galvanised steel



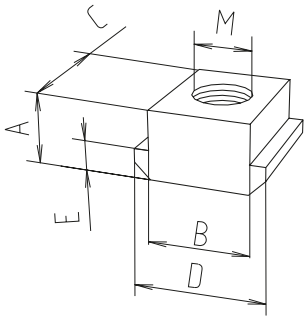

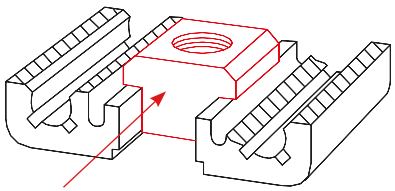

[mm]

Code No.	Type	lot sizes	Slot geometry	A	B	C	D	E	M
4006201	M5	10, 20, 30... pcs	30	5	10	13	13	3	M5
4006203	M6	10, 20, 30... pcs	30	5	10	13	13	3	M6
4006202	M8	10, 20, 30... pcs	30	5	10	13	13	3	M8
4026207	M5	10, 20, 30... pcs	40	8	10	13	15	4	M5
4026203	M6	10, 20, 30... pcs	40	8	10	13	15	4	M6
4009202	M8*	10, 20, 30... pcs	30	5	10	13	13	3	M8
4026206	M8	10, 20, 30... pcs	40	8	10	13	15	4	M8
4029206	M8*	10, 20, 30... pcs	40	8	10	13	15	4	M8
4026214	M8	10, 20, 30... pcs	40	8	10	28	15	4	M8
4026208	M8	10, 20, 30... pcs	40, with screw M8x16	8	10	13	15	4	M8
4026202	M8	10, 20, 30... pcs	40, with screw M8x18	8	10	13	15	4	M8

* Stainless steel

Slot stone -NF-

- This slot stone slides into the end of the profile slot
- The spring clip guarantees fixation in any position/installation position

Material: Galvanised steel



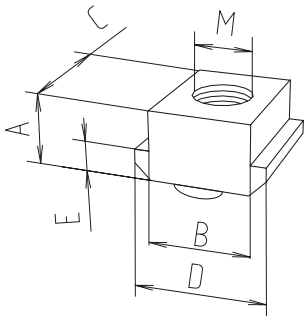

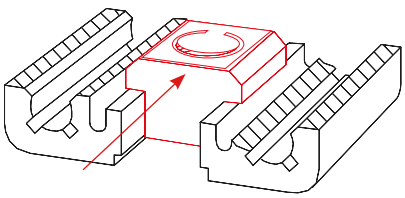

[mm]

Code No.	Type	lot sizes	Slot geometry	A	B	C	D	E	M
4016241	M5	10, 20, 30... pcs	40	8	10	13	15	4	M5
4016242	M6	10, 20, 30... pcs	40	8	10	13	15	4	M6
4016243	M8	10, 20, 30... pcs	40	8	10	13	15	4	M8

Slot stones and screws

Order instruction:

- Purchase only in lot sizes and a multiple of that see product table below

- Insert anywhere in the slot
- The action of tightening turns it into the final clamping position

Material: Galvanised steel

Slot stone -R-



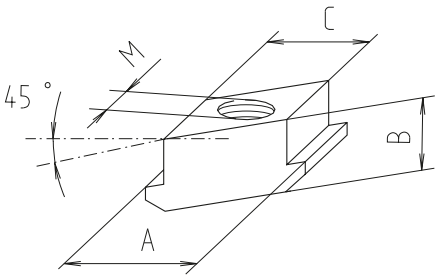

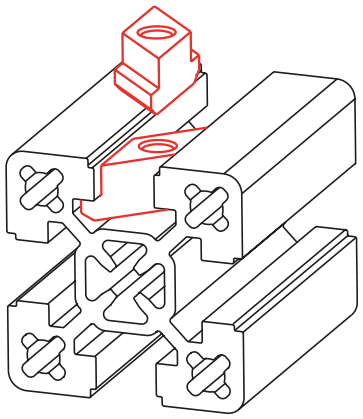

[mm]

Code No.	Type	lot sizes	Slot geometry	A	B	C	M
4006222	M5	10, 20, 30... pcs	30	13	5	10	M5
4006221	M6	10, 20, 30... pcs	30	13	5	10	M6
4006223	M8	10, 20, 30... pcs	30	13	5	10	M8
4026221	M6	10, 20, 30... pcs	40	15	8	10	M6
4026222	M8	10, 20, 30... pcs	40	15	9	10	M8

Slot stone -RF-

- Rhombic slot stones -RF- can be inserted and twisted into any position in the profile slot
- The spring clip guarantees fixation in any position/installation position

Material: Galvanised steel



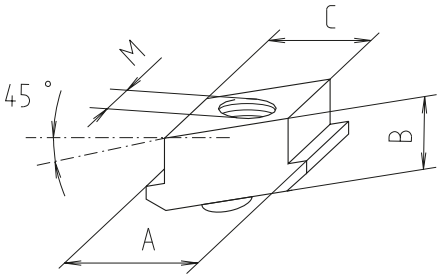

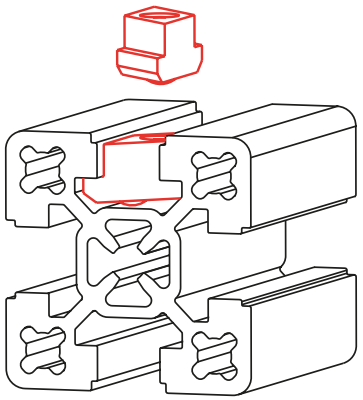

[mm]

Code No.	Type	lot sizes	Slot geometry	A	B	C	M
4006241	M5	10, 20, 30... pcs	30	13	5	10	M5
4006242	M6	10, 20, 30... pcs	30	13	5	10	M6
4006243	M8	10, 20, 30... pcs	30	13	5	10	M8
4016245	M8	10, 20, 30... pcs	40	15	9	10	M8
4016244	M6	10, 20, 30... pcs	40	15	8	10	M6

Slot stone -L- II



Version -L- II

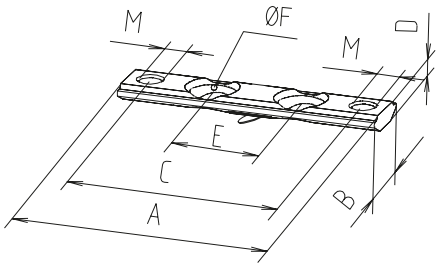

- For fixing flange brackets. The slot stone can be slid/inserted edge-first into the profile slot and fixed in any position with a spring clip.

Material: Galvanised steel

[mm]

Code No.	Type	lot sizes	Version	Slot geometry	A	B	C	D	E	F	M
4006207	M5	10, 20, 30... pcs	-L- II	30	29	12	21.5	4	0*	8.5	M5
4016206	M6	10, 20, 30... pcs	-L- II	40	38	14	28	4	0*	10.2	M6
4016207	M6	10, 20, 30... pcs	-L- II	40	48	14	38	4	15,5	10.2	M6
4016208	M6	10, 20, 30... pcs	-L- II	40	58	14	48	4	20	10.2	M6
4046206	M6	10, 20, 30... pcs	-L- II	40	78	14	68	4	40	10.2	M6

* Only have one hole

Slot stone -E- / E-II



Version -E-

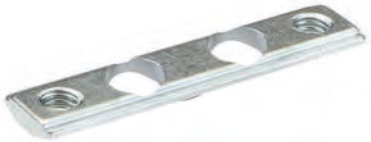

Version -E- II

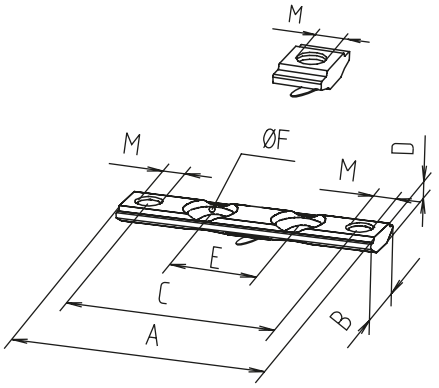

- Slid into the slot from the side
- High load capacity due to large supporting surface
- Fixed in the desired position by the spring clip

Material: Galvanised steel

[mm]

Code No.	Type	lot sizes	Version	Slot geometry	A	B	C	D	E	F	M
4006208	M5	10, 20, 30... pcs	-E-	40	10	16.5	–	4	0*	–	M5
4006209	M6	10, 20, 30... pcs	-E-	40	10	16.5	–	4	0*	–	M6
4006224	M6	10, 20, 30... pcs	-E- II	40	38	16.5	28	3.8	0	10.2	M6
4006239	M6	10, 20, 30... pcs	-E- II	40	58	16.5	48	3.8	20	10.2	M6
4006240	M6	10, 20, 30... pcs	-E- II	40	78	16.5	68	3.8	40	10.2	M6

* Only have one hole

Slot stones and screws

Order instruction:

- Purchase only in lot sizes and a multiple of that see product table below

- Simply slid/inserted edge-first into the profile slot

Material: Galvanised steel

Slot stone -K-



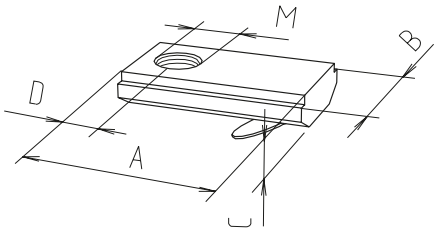

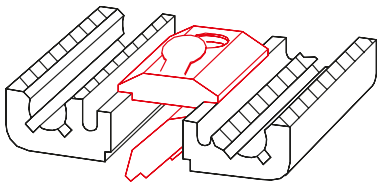

[mm]

Code No.	Type	lot sizes	Slot geometry	A	B	C	D	M
4006211	M5	10, 20, 30... pcs	30	21	12	4	7	M5
4006212	M6	10, 20, 30... pcs	30	21	12	4	7	M6
4006213	M8	10, 20, 30... pcs	30	21	12	4	7	M8
4016212	M6	10, 20, 30... pcs	40	21	14	4	7	M6
4016213	M8	10, 20, 30... pcs	40	21	14	4	7	M8

Slot stone -P- version K



- Creates equipotential bonding between two profiles by damaging the anodised layer

Material: Galvanised steel/stainless steel

Includes:
1 complete unit

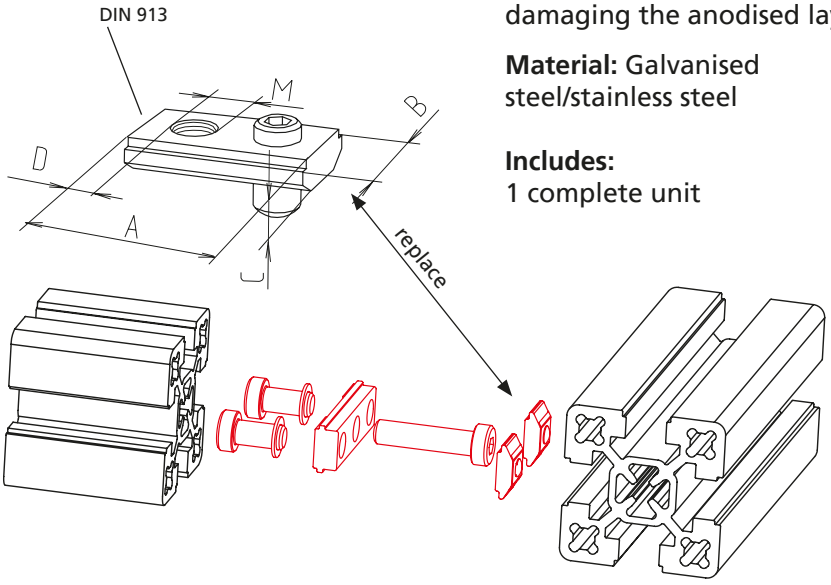

[mm]

Code No.	Type	lot sizes	Material	Slot geometry	A	B	C	D	M
4006214	M5	10, 20, 30... pcs	Galvanised steel	All	20	12	4	7	M5
4009214	M5	10, 20, 30... pcs	Stainless steel	All	20	12	4	7	M5
4006216	M6	10, 20, 30... pcs	Galvanised steel	All	20	12	4	7	M6
4009216	M6	10, 20, 30... pcs	Stainless steel	All	20	12	4	7	M6
4006215	M6	10, 20, 30... pcs	Galvanised steel	40	20	14	4	7	M6

Slot stone -PA-

- The -PA- slot stones have an equipotential bonding effect by destroying the anodised layer. The slot stones can be used in an assembly kit or be interconnected with bridge pieces.

Material: Black galvanised steel

Includes: 1 pack of 10


Version PA -N-


Version PA -R-


Version PA -F-


Version PA -K-


Version PA -L-


Version PA -PLM-

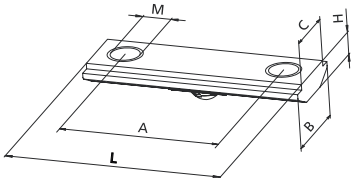

[mm]

Code No.	Type	lot sizes	Slot geometry	A	B	C	H	L	M
Slot stone PA -N-									
4006E01	M5	10, 20, 30... pcs	30	–	13	10	5	13	M5
4006E03	M6	10, 20, 30... pcs	30	–	13	10	5	13	M6
4006E02	M8	10, 20, 30... pcs	30	–	13	10	5	13	M8
4026E07	M5	10, 20, 30... pcs	40	–	15	10	8	13	M5
4026E03	M6	10, 20, 30... pcs	40	–	15	10	8	13	M6
4026E06	M8	10, 20, 30... pcs	40	–	15	10	8	13	M8
Slot stone PA -R-									
4006E22	M5	10, 20, 30... pcs	30	–	13	10	5	29	M5
4006E21	M6	10, 20, 30... pcs	30	–	13	10	5	29	M6
4006E23	M8	10, 20, 30... pcs	30	–	13	10	5	29	M8
4026E21	M6	10, 20, 30... pcs	40	–	15	10	8	31	M6
4026E22	M8	10, 20, 30... pcs	40	–	15	10	9	31	M8
Slot stone PA -F-									
4006E10	M3	10, 20, 30... pcs	30	–	12	10	4	10	M3
4006E16	M4	10, 20, 30... pcs	30	–	12	10	4	10	M4
4006E11	M5	10, 20, 30... pcs	30	–	12	10	4	10	M5
4006E12	M6	10, 20, 30... pcs	30	–	12	10	4	10	M6
4006E15	M4	10, 20, 30... pcs	40	–	14	10	4	10	M4
4006E13	M5	10, 20, 30... pcs	40	–	14	10	4	10	M5
4006E14	M6	10, 20, 30... pcs	40	–	14	10	4	10	M6
Slot stone PA -K-									
4006F11	M5	10, 20, 30... pcs	30	–	12	10	4	21	M5
4006F12	M6	10, 20, 30... pcs	30	–	12	10	4	21	M6
4006F13	M8	10, 20, 30... pcs	30	–	12	10	4	21	M8
4016E12	M6	10, 20, 30... pcs	40	–	14	10	4	21	M6
4016E13	M8	10, 20, 30... pcs	40	–	14	10	4	21	M8
Slot stone PA -L-									
4006E04	M5	10, 20, 30... pcs	30	21.5	12	10	4	29	M5
4016E04	M6	10, 20, 30... pcs	40	28	14	10	4	38	M6
4026E04	M6	10, 20, 30... pcs	40	48	14	10	4	58	M6
4046E04	M6	10, 20, 30... pcs	40	68	14	10	4	78	M6
Slot stone PA -PLM-									
E00037CRE	M3	10, 20, 30... pcs	20	–	6,5	–	3	10	M3
E00038CRE	M4	10, 20, 30... pcs	20	–	6,5	–	3	10	M4
E00039CRE	M5	10, 20, 30... pcs	20	–	6,5	–	3	10	M5

Slot stones and screws

Equipotential bonding cable

Material: Galvanised steel fixing set

- Equipotential bonding cable 6 mm² with cable lug, length 120 mm





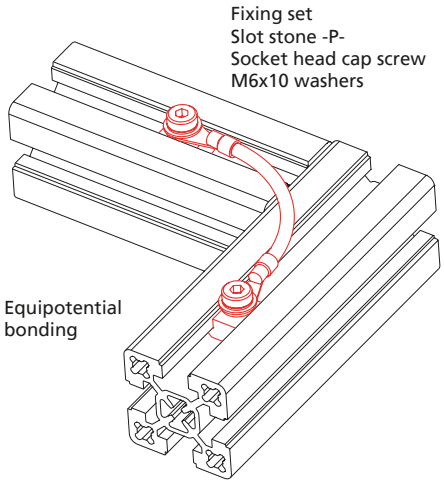

[mm]

Code No.	Type	Slot geometry
4012590	Equipotential bonding (cable)	40
4012591	Complete fixing set	40

Bar material

- The bar material allows thread to be cut to length and positioned to suit the application.
- Manufacturing tolerances (dimension C) must be observed
- Machining to customer specification available on request.

Material: steel / stainless steel
Base profile for slot stone -N-

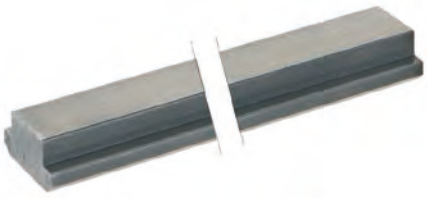

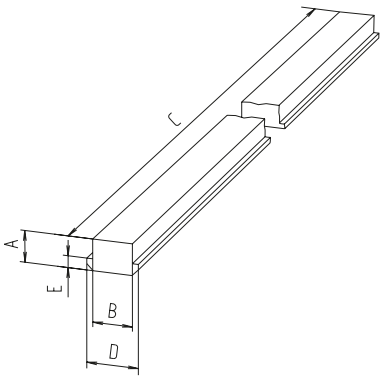

[mm]

Code No.	Material	Slot geometry	A	B	C	D	E
4006200 3010	Steel	30	5	10	2800 - 3000	13	3
4026200 3010		40	8	10	2800 - 3000	15	4
4009200 5600	Stainless steel	30	4	10	5600 - 6000	14	3
4029200 5600		40	8	10	5600 - 6000	15	4

Order instruction:

- Purchase only in lot sizes and a multiple of that see product table below

Use of slot stones (slot stone with spring clip -F- / slot stones -K-,-E- and -L- II)

Code No.	See page	lot sizes	30 slot geometry		40 slot geometry	
			slide into slot	insert edge-first into slot	slide into slot	insert edge-first into slot
Slot stone -F-						
4006710	254	10, 20, 30... pcs	x	x	x	x
4006716	254	10, 20, 30... pcs	x	x	x	x
4006711	254	10, 20, 30... pcs	x	x	x	x
4006712	254	10, 20, 30... pcs	x	x	x	x
4006715	254	10, 20, 30... pcs	x		x	x
4006713	254	10, 20, 30... pcs	x		x	x
4006714	254	10, 20, 30... pcs	x		x	x
Slot stone -L- II						
4006207	257	10, 20, 30... pcs	x	x	x	x
4016206	257	10, 20, 30... pcs	x		x	x
4016207	257	10, 20, 30... pcs	x		x	x
4016208	257	10, 20, 30... pcs	x		x	x
4046206	257	10, 20, 30... pcs	x		x	x
Slot stone -E- / E-II						
4006208	257	10, 20, 30... pcs			x	
4006209	257	10, 20, 30... pcs			x	
4006224	257	10, 20, 30... pcs			x	
4006239	257	10, 20, 30... pcs			x	
4006240	257	10, 20, 30... pcs			x	
Slot stone -K-						
4006211	258	10, 20, 30... pcs	x	x	x	x
4006212	258	10, 20, 30... pcs	x	x	x	x
4006213	258	10, 20, 30... pcs	x	x	x	x
4016212	258	10, 20, 30... pcs	x		x	x
4016213	258	10, 20, 30... pcs	x		x	x
4006214	258	10, 20, 30... pcs	x	x	x	x
4006215	258	10, 20, 30... pcs	x	x	x	x
4006216	258	10, 20, 30... pcs	x		x	x

Slide slot stone into slot

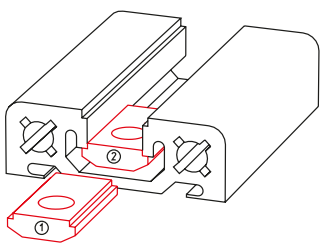

Numbers = Installation sequence

Insert slot stone edge-first into slot

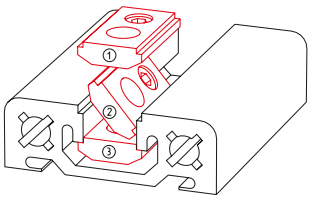

Example of retrospective insertion of an N slot stone in a profile.
You will find a suitable drilling fixture on page 484

Hole
Diameter: 20 mm
Depth: 11.5 mm

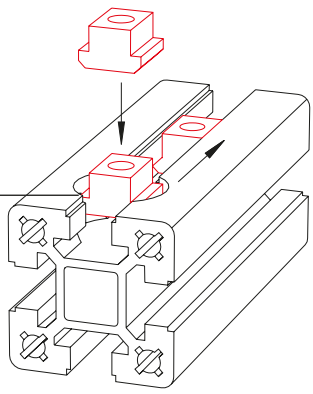

Slot stones and screws

Suspended sliding block

- To take tools and curtain guards
- Slid into the profile slot from the side.

Material: Black plastic



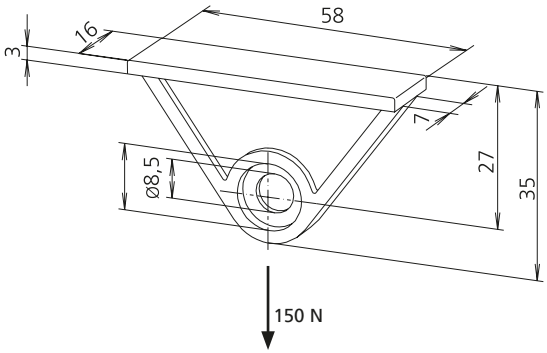

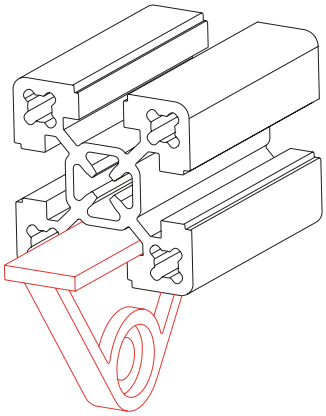

Code No.	Slot geometry
4018200	40

Order instruction:

- Purchase only in lot sizes and a multiple of that see product table below

Material: Galvanised steel

Includes:
1 unit complete with lock washer

Screws - DIN 7984



Code No.	Type	lot sizes	Suitable for
4006234	M5x14	10, 20, 30... pcs	Connecting plate 30
4006235	M5x16	10, 20, 30... pcs	Hidden screw 30
4006238	M5x35	10, 20, 30... pcs	Corner joint clamping profiles 30
4016234	M6x16	10, 20, 30... pcs	Connecting plates as of size 40
4016235	M6x20	10, 20, 30... pcs	Hidden screw size 40
4016240	M6x45	10, 20, 30... pcs	Corner joint clamping profiles 40
4016236	M8x12	10, 20, 30... pcs	Universal
4016238	M8x18	10, 20, 30... pcs	Universal
4016237	M8x30	10, 20, 30... pcs	Universal

RK expansion screws



- Used for low dynamic loads
- Tightening torque 10 Nm

Material: Galvanised steel
Head to DIN 7984

Code No.	Type	lot sizes	Suitable for
4126230	M6x35	10, 20, 30... pcs	40x40 to 80x160 F-profiles

Profile covers

Versions



Cap



End plate



Cover profile -plastic-



Cover profile -aluminium-



Rim



Door gap seal

Table of contents

Profile covers

Cap ..... p. 266

End plate ..... p. 268

Cover profile -plastic- ..... p. 269

Cover profile -aluminium- ..... p. 269

Rim ..... p. 270

Door gap seal ..... p. 270

Profile covers

Order instruction:

- Purchase only in lot sizes and a multiple of that see product table below

Caps
-plastic-

- In addition to the standard black version (see next page), it is possible to order other types in various RAL colours. Other profile types and RAL colours available on request.
- Please note that, for typographical reasons, the colour illustrated here is only an approximation of the RAL colour.



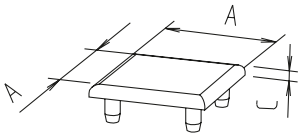

(1)

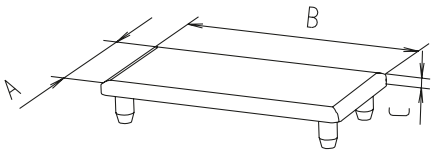

(2)

White RAL 9006
Grey RAL 7035
Yellow RAL 1021
Red RAL 3020
Blue RAL 5005

Code No.	Type	lot sizes	See figure	A	B	C	D	R
Colour plastic cap								
410042_	F-R 30	10, 20, 30... pcs	1	30	–	3	–	29
400042_	F-G/GG/2G/3G 30x30	10, 20, 30... pcs	2	30	–	3	–	–
401042_	F-G/GG/2G/3G 40x40	10, 20, 30... pcs	2	40	–	4	–	–
403042_	F-G/F-GG 40x80	10, 20, 30... pcs	4	40	80	4	–	–
408842_	F-G/GG/2G/3G 50x50, SP-50x50	10, 20, 30... pcs	2	50	–	4	–	–
412142_	F-G/GG/2G/3G 60x60	10, 20, 30... pcs	2	60	–	4	–	–
404042_	F-G/GG/2G 80x80	10, 20, 30... pcs	2	80	–	4	–	–

404042_
- 2 = RAL 9006
- 3 = RAL 7035
- 4 = RAL 1021
- 5 = RAL 3020
- 6 = RAL 5005

Black caps
-plastic-



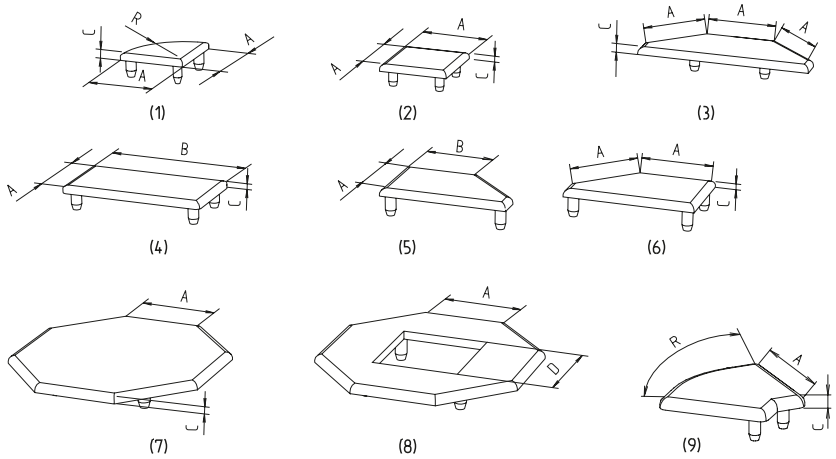

Black RAL 9005

Code No.	Type	lot sizes	Version	See figure	A	B	C	D	R
Black plastic cap									
4000421	F-G/GG/2G/3G 30x30	10, 20, 30... pcs		2	30	–	3	–	–
4010421	F-G/GG/2G/3G 40x40	10, 20, 30... pcs		2	40	–	4	–	–
4030421	F-G/GG 40x80	10, 20, 30... pcs		4	40	80	4	–	–
4088421	SP-50x50, F-G/GG/2G/3G 50x50	10, 20, 30... pcs		2	50	–	4	–	–
4100421	F-R 30	10, 20, 30... pcs		1	30		3		R 29
4121421	F-G/GG/2G/3G 60x60	10, 20, 30... pcs		2	60	–	4	–	–
4040421	F-G/GG/2G 80x80	10, 20, 30... pcs		2	80	–	4	–	–
4388421	15x40	10, 20, 30... pcs		4	15	40	4	–	–
4348421	15x60	10, 20, 30... pcs		4	15	60	4	–	–
4358421	15x80	10, 20, 30... pcs		4	15	80	4	–	–
4368421	15x120	10, 20, 30... pcs		4	15	120	4	–	–
4378421	15x160	10, 20, 30... pcs		4	15	160	4	–	–
4158421	2x40	10, 20, 30... pcs		5	40	–	4	–	–
4158422	2x40	10, 20, 30... pcs		6	40	–	4	–	–
4258421	3x40	10, 20, 30... pcs		3	40	–	4	–	–
4050421	8x40	10, 20, 30... pcs		7	40	–	4	–	–
4050422	8x40	–		8	40	–	4	40	–
4200421	KL 30x30, ESP 30	10, 20, 30... pcs		2	30	–	3	–	–
4600421	KLD 30x30	10, 20, 30... pcs		2	30	–	3	–	–
4700421	KLE 30x30	10, 20, 30... pcs		2	30	–	3	–	–
4408421	KLW 30-15	10, 20, 30... pcs		9	30	–	3	–	15°
4418421	W/KLW 30-30	10, 20, 30... pcs		9	30	–	3	–	30°
4428421	W/KLW 30-45	10, 20, 30... pcs		9	30	–	3	–	45°
4448421	W/KLW 30-60	10, 20, 30... pcs		9	30	–	3	–	60°
4438421	W/KLW 30-90	10, 20, 30... pcs		9	30	–	3	–	90°
4210421	KL 40x40, ESP 40	10, 20, 30... pcs		2	40	–	4	–	–
4610421	KLD 40x40	10, 20, 30... pcs		2	40	–	4	–	–
4710421	KLE 40x40	10, 20, 30... pcs		2	40	–	4	–	–
4458421	KLW 40-15	10, 20, 30... pcs		9	40	–	4	–	15°
4468421	W/KLW 40-30	10, 20, 30... pcs		9	40	–	4	–	30°
4478421	W/KLW 40-45	10, 20, 30... pcs		9	40	–	4	–	45°
4498421	W/KLW 40-60	10, 20, 30... pcs		9	40	–	4	–	60°
4488421	W/KLW 40-90	10, 20, 30... pcs		9	40	–	4	–	90°

Profile covers

End plate

Includes: End plate complete with fixing set



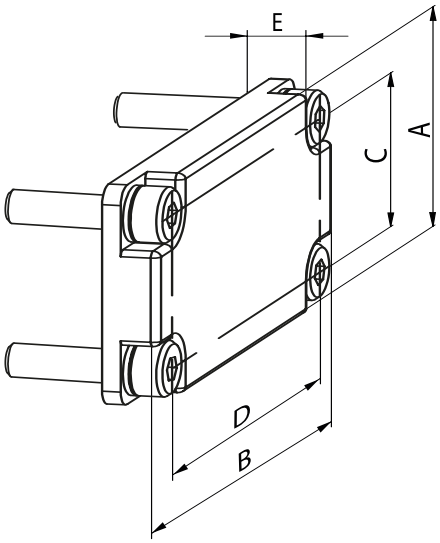

Code No.	Type	A	B	C	D	E
End plate to cover the front-end of the profile						
Die-cast aluminium						
4004401	F-G/GG/2G/3G 30x30	30	30	21	21	6
4084401	F-G/GG/2G/3G 50x50	50	50	38	38	7
4044401	F-G/F-GG 80x80	80	80	68	68	8
Aluminium						
4064401	F-G/GG/2G/3G 60x120	60	120	48	108	15
4074401	F-G/GG/2G 80x160	80	160	68	148	15

Cover profile -plastic-

- For the flush covering of longitudinal slots. Two versions are available.

- Due to the geometry of type 1, it is possible to route leads in the slot. Type 2, on the other hand, is easier to take out of the profile slot (without leaving residues).

Type 1

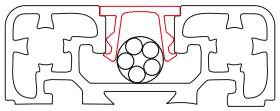

Type 2

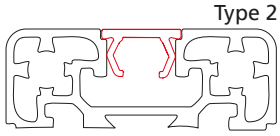



Material: Plastic
Please note that, for typographical reasons, the colour illustrated here is only an approximation of the RAL colour.
Further special colours available on request.

- Black RAL 9005
- White RAL 9006
- Grey RAL 7035
- Yellow RAL 1021
- Red RAL 3020
- Blue RAL 5005

[mm]

Code No.	Type	Version	Colour	A	B	C
4000570	2	2 m bar	Black	12	11.2	6.4
4000575	2	2 m bar	Grey	12	11.2	6.4
4000577	2	2 m bar	White	12	11.2	6.4
4000579	2	2 m bar	Yellow	12	11.2	6.4
4000581	2	2 m bar	Red	12	11.2	6.4
4000583	2	2 m bar	Blue	12	11.2	6.4
4008570	1	2 m bar	Black	12	11.2	6.4
4000585	1	2 m bar	Yellow	12	11.2	6.4
4000586	1	2 m bar	Transparent	12	11.2	6.4

Cover profile -aluminium-



Material: Al Mg Si 0.5
Clear anodised.

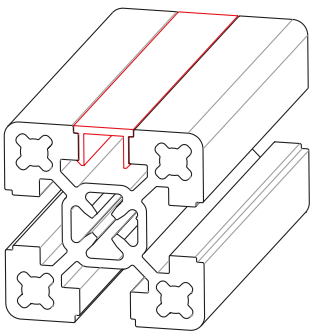

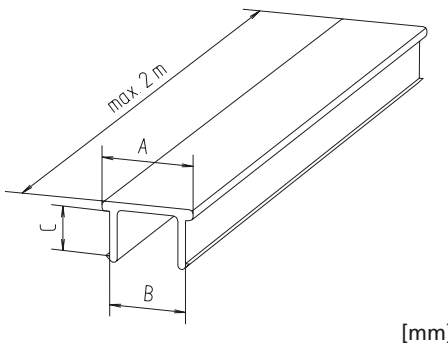

[mm]

Code No.	Type	Slot geometry	A	B	C
4005572	Cut to size	30	12	10	2.7
4005570	1	30	12	10	2.7
4015572	Cut to size	40	12	10	5.2
4015570	1	40	12	10	5.2

Profile covers

Rim

- Protects the structure from damage
- Simply pressed into the profile slot

Material:
Synthetic EPDM rubber, black

Shore hardness: 70 Shore



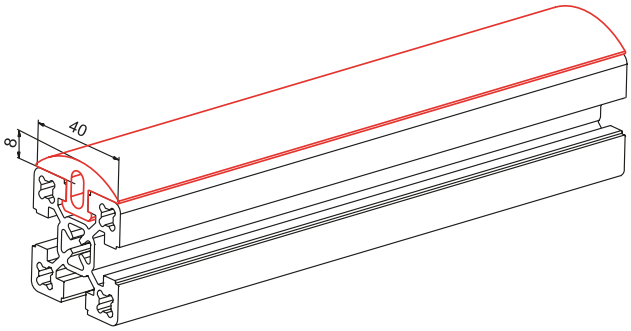

Code No.	Type	Slot geometry
4018594	Rim, 30 m roll	40
401859910000	Rim, 10 m roll	40

Door gap seal

- Can absorb gap width tolerances
- Acts as a door stop

Material: NBR rubber, black

Shore hardness: 55 Shore



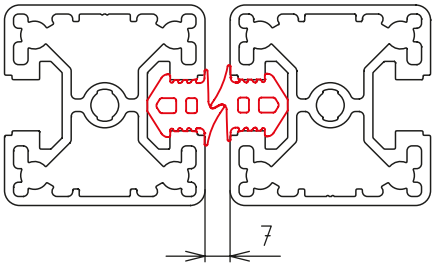

Code No.	Type	Slot geometry
401851810000	Door gap seal, 10 m roll	40
401851850000	Door gap seal, 50 m roll	40
4018518100000	Door gap seal, 100 m roll	40



Panels and accessories

Versions

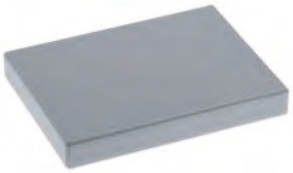

Panels



Framing profile



Embedding U-profile



Frame profile
Corner joint



Profile seal



Block joint -L-



Block joint -G-



Block joint -K-



Vario-Quick
holding block R



Vario-Quick
holding block S



Vario-Quick
holding block L



Vario-Quick
holding block K/KK



Vario-Quick
cable bracket



Tube clamp



Sliding door profile

Table of contents

Panels and accessories

Panels ..... p. 274

2-piece framing profile Plastic..... p. 276

2-piece embedding U-profile p.278

Frame profile/corner joint ..... p. 281

Profile seals..... p. 282

Block joint -L- ..... p. 284

Block joint -G-..... p. 285

Block joint -K-..... p. 285

Vario-Quick holding block R..... p. 286

Vario-Quick holding block S ..... p. 286

Vario-Quick holding block L ..... p. 287

Vario-Quick holding block K/KK..... p. 288

Vario-Quick cable bracket..... p. 289

Tube clamp ..... p. 288

Sliding door profile..... p. 290

Panels and accessories

Panels

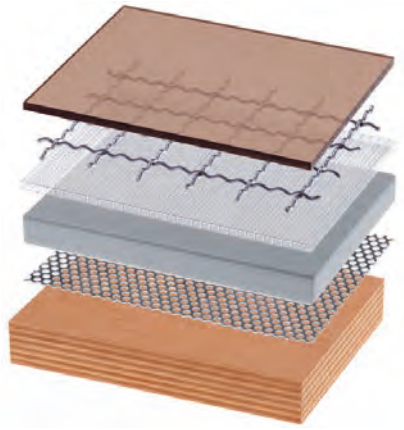

- For doors, cladding, safety and table tops. Cut to specification!

Code No.	Type	Thickness	Version	Max. size [mm]	Weight [kg/m²]
4018584	Makrolon	2 mm	Clear	3.050 x 2.050	2.40
4018586	Makrolon	4 mm	Clear	3.050 x 2.050	4.80
4018576	Makrolon	6 mm	Clear	3.050 x 2.050	8.00
4018579	Makrolon	6 mm	Brown tinted	3.050 x 2.050	8.00
4018578	Makrolon	10 mm	Clear	3.050 x 2.050	13.00
4018582	Acrylic glass	4 mm	Clear	3.050 x 2.050	4.80
4018595	Acrylic glass	5 mm	Clear	3.050 x 2.050	6.00
4018563	Acrylic glass	5 mm	Blue, transparent	3.050 x 2.030	6.00
4018575	Acrylic glass	6 mm	Clear	3.050 x 2.050	7.20
4018577	Acrylic glass	10 mm	Clear	3.050 x 2.050	13.00
4012576	Trespa	6 mm	Brown	2.050 x 2.130	8.40
4012586	Trespa	6 mm	Silver-grey	3.050 x 1.530	8.40
4012587	Trespa	10 mm	Silver-grey	3.050 x 1.530	13.00
4018570	Koematex	6 mm	White	3.050 x 2.030	4.20
4018571	Koematex	8 mm	White	3.050 x 2.030	5.60
4018572	Koematex	10 mm	White	3.050 x 2.030	6.00
4012579	Multiplex	30 mm	Untreated	2.500 x 1.500	27.00
4015573	Aluminium	2 mm	Clear anodised	2.000 x 1.000	5.40
4012582	Table top	19 mm	Grey plastic-coated, glued edges	2.000 x 2.075	14.70
4012577	Composite	6 mm	Clear anodised	3.050 x 1.500	7.30
4012511	MDF panel	6 mm	Untreated	2.000 x 2.075	5.00
4012512	MDF panel	8 mm	Untreated	2.000 x 2.075	6.60
4016576	Perforated plate	1 mm	Round holes in staggered rows, galvanised steel	1.000 x 2.000	4.30
4016577	Wire mesh 20x20	2.5 mm	Galvanised steel	2.000 x 1.000	2.40
4016578	Wire mesh 30x30	3 mm	Galvanised steel	2.000 x 3.000	3.70
4016579	Wire mesh 40x40	3.8 mm	Galvanised steel	2.000 x 3.000	4.70

Further versions available on request. For material descriptions, see next page.



Makrolon
Unbreakable, impact-resistant, weather-resistant, good chemical resistance

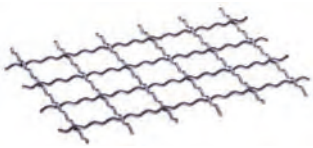

Wire mesh
Galvanised steel, cost-effective panel for safety devices



Acrylic glass
Highly transparent, low thickness tolerances, weather-resistant, unbreakable, easy to work with

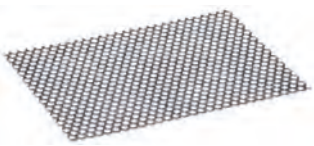

Perforated plate
Galvanised sheet steel, 5 mm round hole in staggered rows

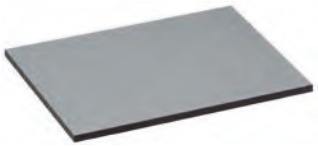

Trespa
Colourfast, weather-resistant, decorative, impact-, shock- and scratch-resistant, very easy to work with

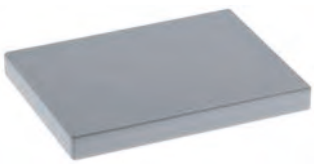

Table top
Decorative, plastic-coated, glued edges

Koematex
Flame-retardant, thermoformable, low static charging, very easy to work with



Composite
Low-weight, high flexural strength, weather-resistant, very good flatness and smooth surface



Multiplex panel
High load-bearing strength and flexural strength, easy to work with



MDF panel
Easy to work with, cost-effective

Panels and accessories

2-piece framing profile

- Used for retrofitting panels

Material: Black plastic.
For a description of assembly, please see page 277

Profile cut length:
Frame internal dimension -33 mm (if corner pieces are used)

Panel cut length:
Frame internal dimension -5.5 mm all-round



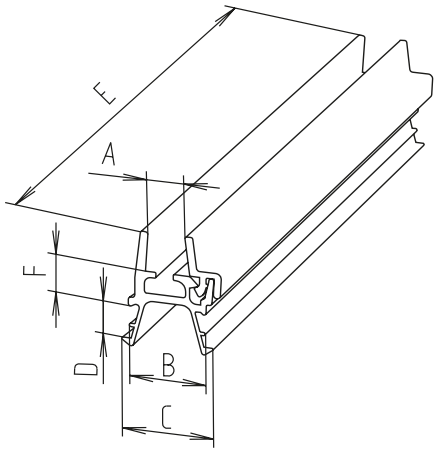

Note: Note there is another framing profile version on page 278.

Code No.	Type	A	B	C	D	E	F
4018556	Bar	4	11.8	14.2	5	2000	4
4018558	Bar	5	11.8	14.2	5	2000	4
4018560	Bar	6	11.8	14.2	5	2000	4

Order instruction:

- Purchase only in lot sizes and a multiple of that see product table below

Material: Black plastic

Assembly description:
see page 277

Corner piece



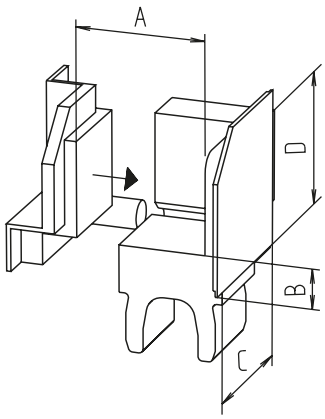

Code No.	lot size	A	B	C	D
40185651	4, 8, 12... pcs	4 or 6	4	17	17

Assembly description:

1. Insert the corner piece base unit (1) into each corner.
2. Cut framing profile (2) and press it into the profile slots.
3. Insert panel (3) and fix with 2 corner piece covers (4) in diagonally opposite corners.
4. Press in the cover strip of the framing profiles.
5. Press in the remaining corner piece covers.

- All components can be undone if necessary, so that damaged panels or panes can be replaced without difficulty.

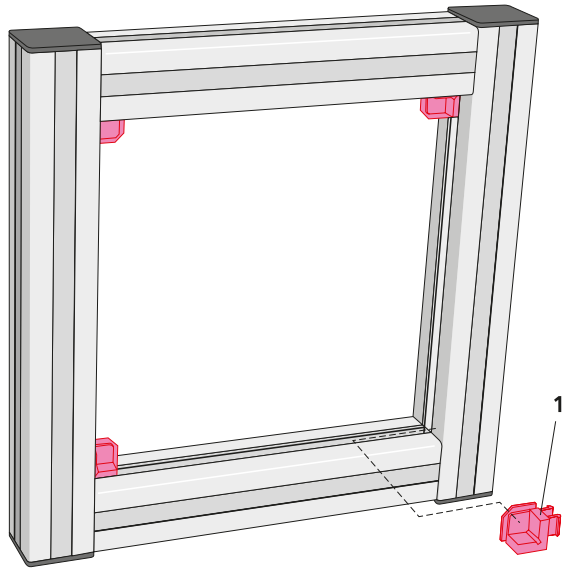

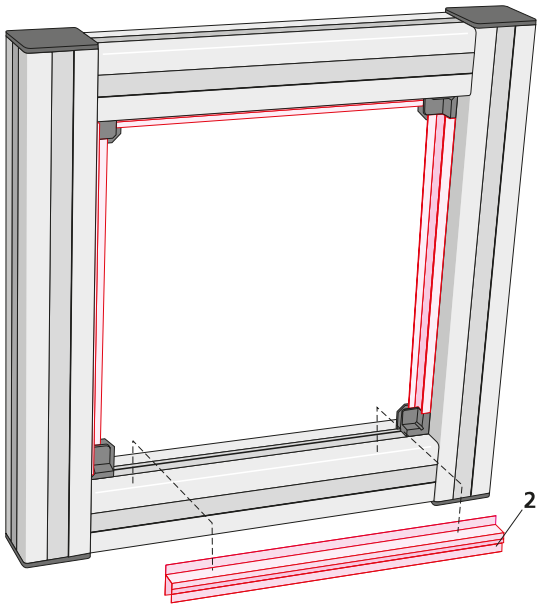

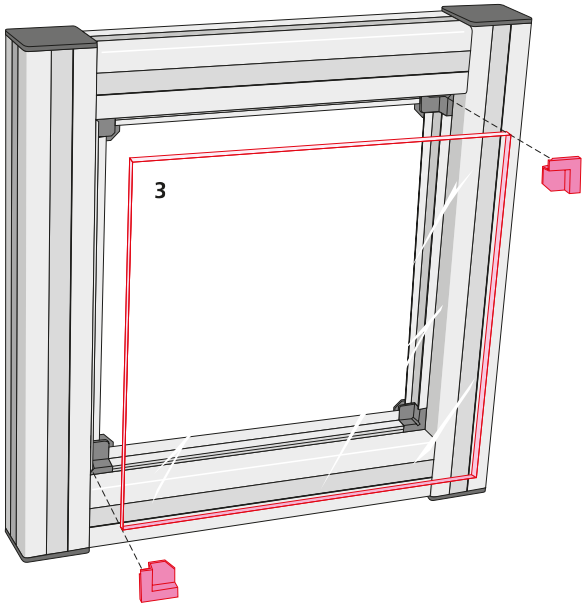

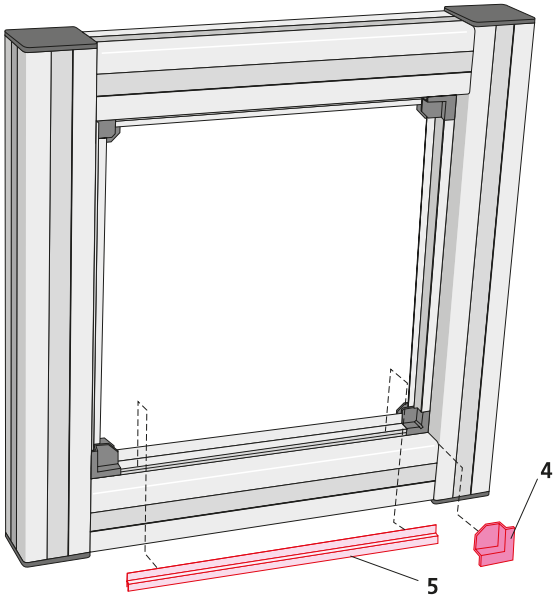

Panels and accessories

2-piece framing profile
Used for retrofitting panels

- Used for retrofitting panels
- The aluminium bottom is designed to take panel thicknesses of 4, 6, 8 or 10 mm. A plastic top serves as a sealing strip and protects against dust and splashes.

Material:
Aluminium profile bottom, black plastic profile top (with soft PVC on the sealing strips)
Profile cut length:
Frame internal dimension -56 mm (if corner pieces are used)
Panel cut length:
Frame internal dimension -11.5 mm all-round.
Assembly description:
See page 277

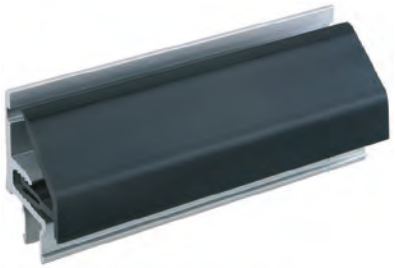

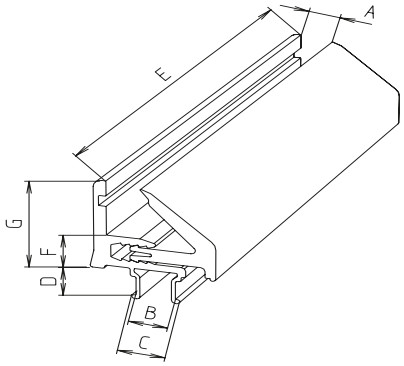

Code No.	Type	To slot geom.	A	B	C	D	E_{Max}	F	G
4010571	Cut to size	40	4,6,8,10	9.2	11.4	6.8	2000	10	26
4010572	Bar	40	4,6,8,10	9.2	11.4	6.8	2000	10	26

Order instruction:

- Purchase only in lot sizes and a multiple of that see product table below

Corner piece

- **Material:** Black plastic
- **Assembly description:**
See page 277



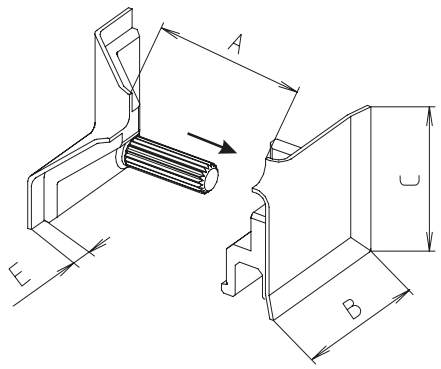

Code No.	lot sizes	Slot geometry	A	B	C	E
40185661	4, 8, 12... pcs	40	4-10	31	31	5

Embedding U-profile

- Panels with a thickness of 6 mm can be embedded in the slots with the plastic profile.
- The embedding U-profiles are slid into the slot before assembly.

Material: Black plastic

Panel cut length:
Frame internal dimension +6 mm all-round.



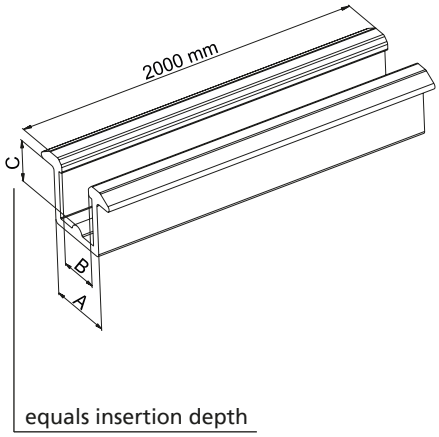

Code No.	Type	To slot geometry	A	B	C
4010575	Bar	30 + 40	10	6	6



Panels and accessories

Frame profile

- Takes wire meshes (up to 30x30x3) and panels
  Material: Aluminium

Panel cut length:
Frame internal dimension -7 mm (with 30 slot geometry -10 mm, see page 178) all-round, for fixing in the slot.





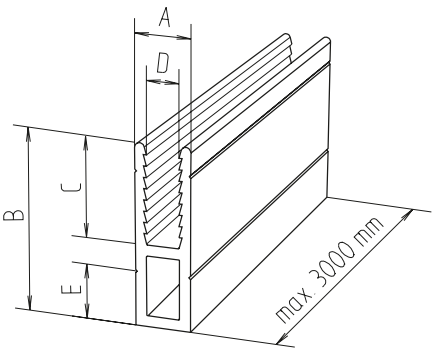

Code No.	Type	A	B	C	D	E
4015562	Cut to size	10	33	18	5.8	10
4015560	3m bar	10	33	18	5.8	10

Order instruction:

- Purchase only in lot sizes and a multiple of that see product table below

Frame corner joint

- Connection element for the frame profile

Material: Black plastic

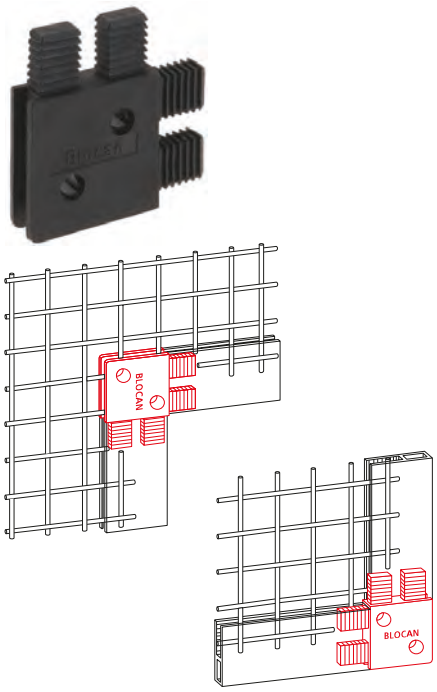

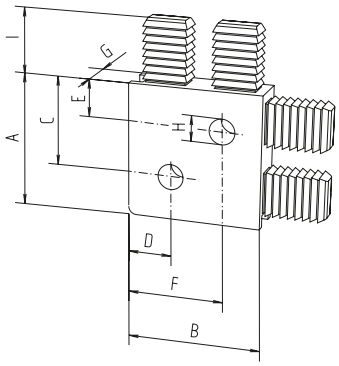

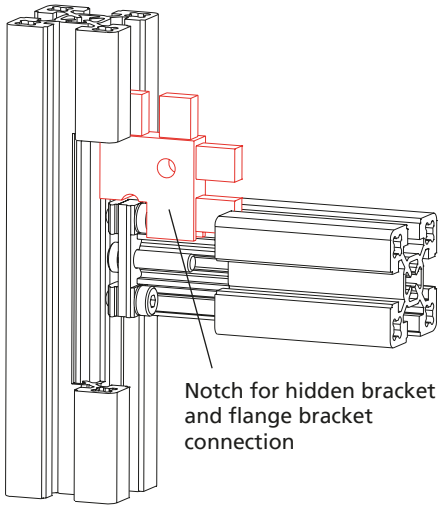

Code No.	lot sizes	A	B	C	D	E	F	G	H	I
4010565	4, 8, 12... pcs	34	34	23	11	10	24	10	6.5	15
4000566	With notch for 30 slot geometry (see diagram above)									
4010566	With notch for 40 slot geometry (see diagram above)									

Panels and accessories

Profile seal

- Fixing panels in the profile slot

Assembly: Ideally, the seal is first laid around the panel and then placed into the profile slot.

Material: SBR, 60 Sh, black

Panel cut length:
Frame internal dimension +6 mm all-round.

Version for 2-sided sealing



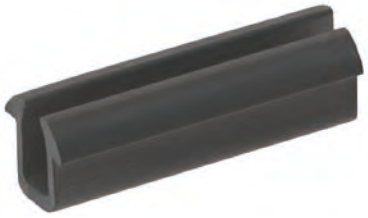

Code No.	Sealing	Slot geometry	length
401851510000	2-sided	40	10 m
401851560000			60 m

Version for 1-sided and 2-sided sealing



Assembly: Insert the panel into the profile slot.
Then press the profile seal into the slot by hand or using a blunt object.

Material: Black EPDM

(1)



(2)



(3)

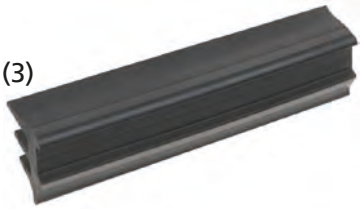

Code No.	See figure	Sealing	Slot geometry	Length
4018513010000	1	1-sided	40	10 m
4018513050000				50 m
4018513150000				150 m
421857110000	2		30, 40	10 m
421857150000				50 m
4218571100000				100 m
401851410000	1		40	10 m
401851450000				50 m
4018514100000				100 m

*The clampable wall thickness is reduced by 2 mm (see p. 427)

Profile seals for panel elements

Mounting options

Profile	Version	Panel thickness [mm]								Seal	Exsample	Code No.
		10	8	6	5	4	3	2	1			
KL-40	without seal (0-6)mm and (4-10)mm	X	X	X	X	X	X	X	X	-	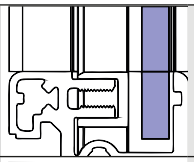	-
	(See figure 3) Profile seal 1-sided for panel thickness 6mm (1-3)mm and (4-8)mm		X	X	X	X	X	X	X		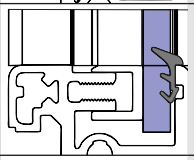	421857110000 421857150000 42185711000000
KL-30	Without seal			X	X	X	X			-	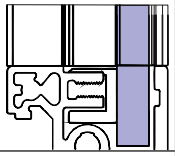	-
	(See figure 3) Profile seal 1-sided for panel thickness 6mm				X	X	X	X			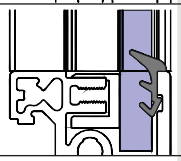	421857110000 421857150000 42185711000000
ESP-40	(See figure 3) Profile seal 1-sided for panel thickness 6mm				X	X					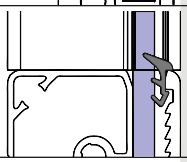	421857110000 421857150000 42185711000000
ESP-30	(See figure 3) Profile seal 1-sided for panel thickness 6mm						X				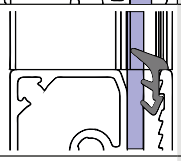	421857110000 421857150000 42185711000000
Slot geometry 40	Without seal	X								-	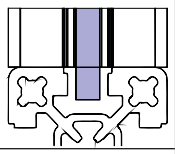	-
	Profile seal 2-sided for panel thickness 6mm			X	X						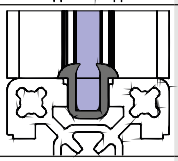	401851510000 401851560000
	(See figure 2) Profile seal 1-sided for panel thickness 6mm			X	X	X					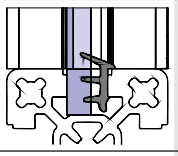	401851410000 401851450000 4018514100000
	(See figure 1) Profile seal 1-sided for panel thickness 2-4mm					X	X	X			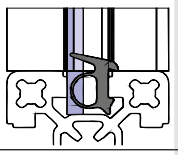	4018513010000 4018513050000 40185130100000
	(See figure 2) Profile seal 1-sided for panel thickness 6mm mounted on both sides							X			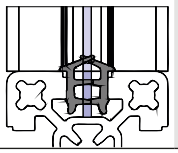	2 x 401851410000 2 x 401851450000 2 x 4018514100000

Panels and accessories

Block joint

- For fixing panels to profiles

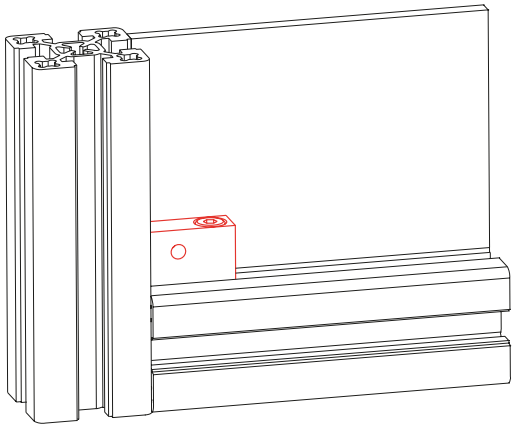

Order instruction:

- Purchase only in lot sizes and a multiple of that see product table below

Material:
Black plastic, galvanised steel parts

Includes:
Complete fixing set for profile assembly.

Block joint -L-



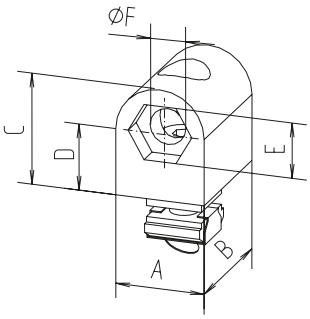

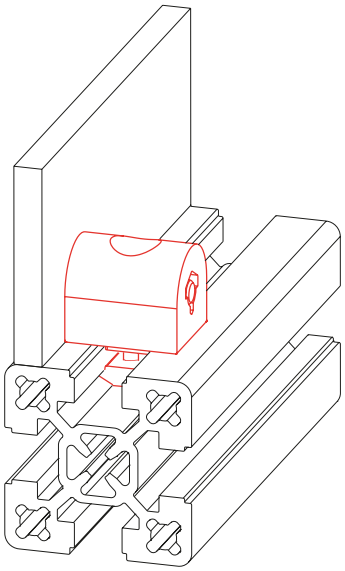

[mm]

Code No.	Type	lot sizes	Slot geometry	A	B	C	D	E	F
4008122	Block joint -L-	–	30	20	24	20	10	8	5.5
4018122	Block joint -L-	–	40	20	24	20	10	8	5.5
4004131	Fixing screw for panel	10, 20, 30... pcs	Wall thickness 2-8 mm	Socket head button screw M5x30 ISO 7380					

Block joint -G-



Material:
Vibration finished aluminium, galvanised steel parts

Includes:
Complete fixing set for profile assembly.

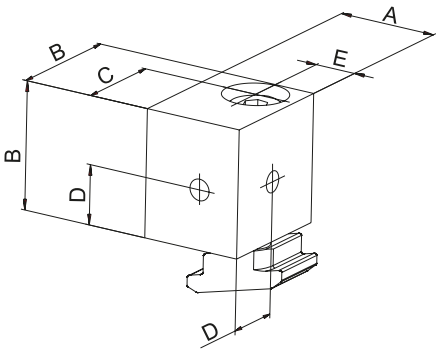

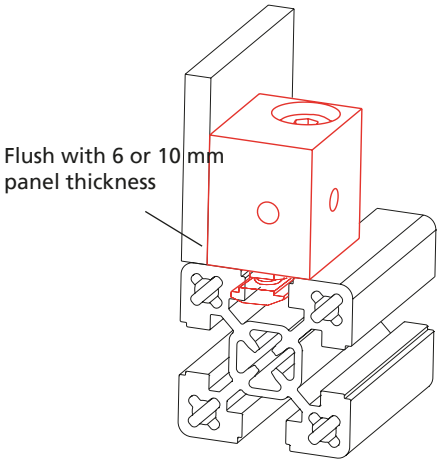

[mm]

Code No.	Type	Slot geometry	A	B	C	D	E
4015121	M6	40	24	30	22	14	10
4025122	M8	40	24	30	22	14	10
4085121	M6 for profile 50	40	34	30	22	14	15
4085122	M8 for profile 50	40	34	30	22	14	15

Block joint -K-



Material:
Vibration finished aluminium, galvanised steel parts

The insertion depth in the profile is 1.5 mm.

Includes:
Complete fixing set for profile assembly.

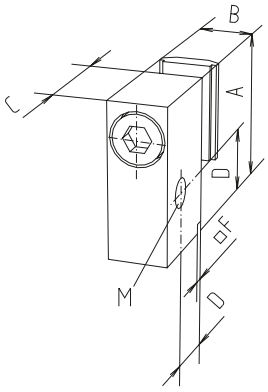

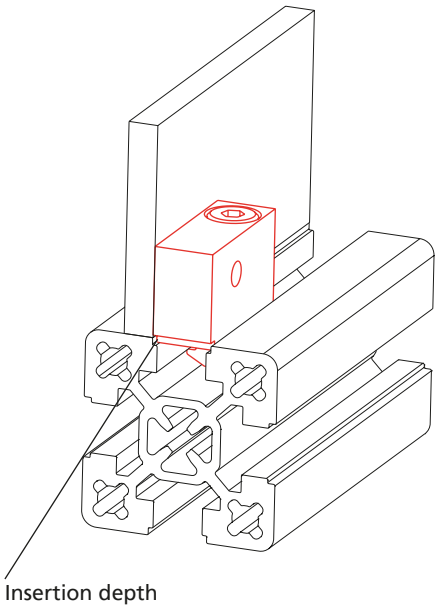

[mm]

Code No.	Type	Slot geometry	A	B	C	D	F	M
4005123	M6	30	32	12	20	12.5	2	M6
4015123	M6	40	32	12	20	12.5	2	M6

Panels and accessories

Order instruction:

- Purchase only in lot sizes and a multiple of that see product table below

Vario-Quick holding block R



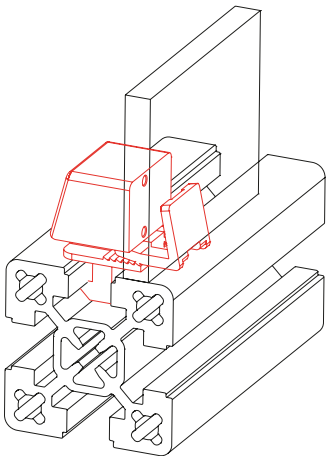

- For retrofitting a wide variety of panels without screws in an existing profile structure
- Fixation by means of toothed snap-in clips. Spacers allow for different distances from the profile edge

Clamping range for panels:
1-10 mm.

Panel cut length:
Frame internal dimension -6 mm all-round.

Material: Black plastic

Includes:
1 pack of 10

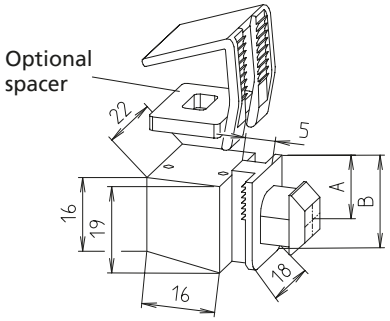

[mm]

Code No.	Type	lot sizes	Version	A	B
40081231	Holding block R	10, 20, 30... pcs	30 slot geometry	5.5	20
40181231	Holding block R	10, 20, 30... pcs	40 slot geometry	8.5	20
40081321	Spacer R	10, 20, 30... pcs	2 mm	–	–
40081331	Spacer R	10, 20, 30... pcs	3 mm	–	–
40081351	Spacer R	10, 20, 30... pcs	5 mm	–	–

Vario-Quick holding block S

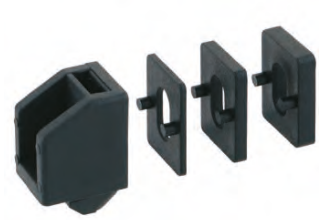

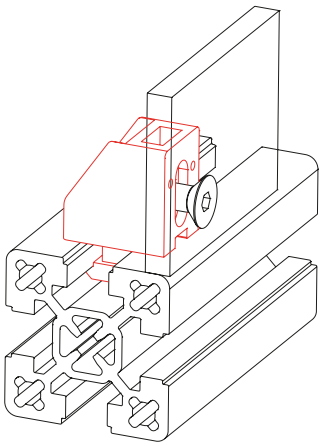

- For retrofitting a wide variety of panels in an existing profile structure
- The panel is screwed to the holding block.
- Spacers allow for different distances from the profile edge

Material: Black plastic
Galvanised nut

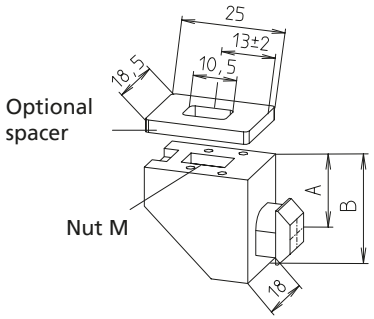

[mm]

Code No.	Type	lot sizes	Version	A	B	M
40081641	Holding block S	10, 20, 30... pcs	30 slot geometry	5	18	M4
40181641	Holding block S	10, 20, 30... pcs	40 slot geometry	10	25	M4
40081241	Holding block S	10, 20, 30... pcs	30 slot geometry	5	18	M6
40181241	Holding block S	10, 20, 30... pcs	40 slot geometry	10	25	M6
40181321	Spacer S/L	10, 20, 30... pcs	2 mm	–	–	–
40181331	Spacer S/L	10, 20, 30... pcs	3 mm	–	-	–
40181351	Spacer S/L	10, 20, 30... pcs	5 mm	–	–	–

Vario-Quick holding block L



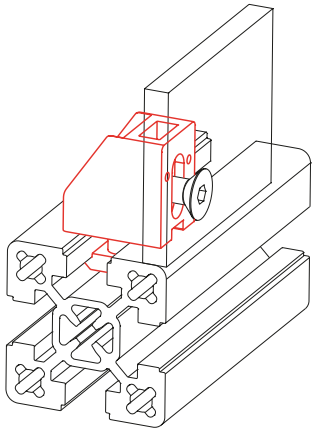

- For fixing various panels in an profile structure.
- The panel is screwed to the holding block.
- One fixing set connects one profile. The slot allows different panel thicknesses to be fixed without spacers.

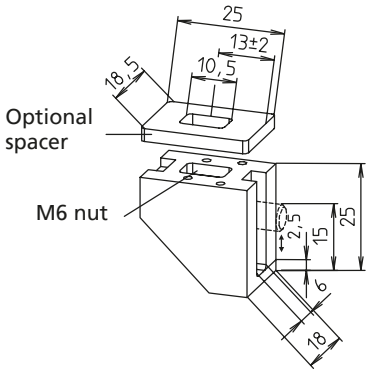

Material: Black plastic, galvanised nut

Includes:
1 pack of 10

The Order No. includes one complete fixing set (socket head cap screw, slot stone -F-) for mounting on profile

[mm]

Code No.	Type	lot sizes	Version
40081261	Holding block L	10, 20, 30... pcs	30 slot geometry
40181261	Holding block L	10, 20, 30... pcs	40 slot geometry
40181321	Spacer S/L	10, 20, 30... pcs	2 mm
40181331	Spacer S/L	10, 20, 30... pcs	3 mm
40181351	Spacer S/L	10, 20, 30... pcs	5 mm

Application examples:

- **Vario-Quick holding block R/S**
  Profile 40 combined with panel thickness 4 and 10 mm. Compensation using spacers (choice of 2, 3 or 5 mm)

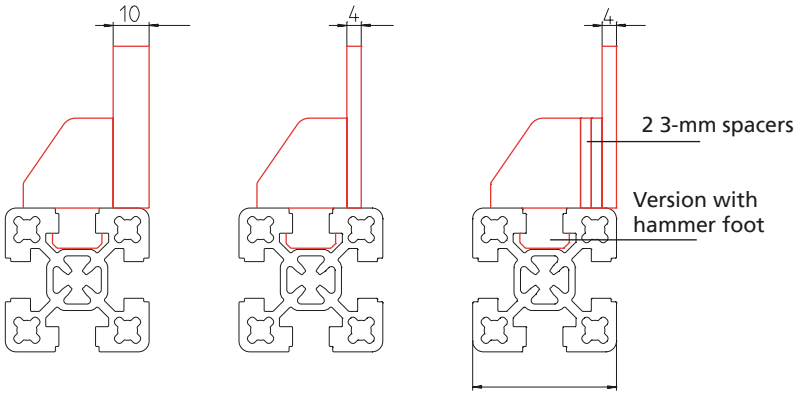

- **Vario-Quick holding block L:**
  Profile 40 combined with panel thickness 4 and 6 mm. Compensation using slot – if necessary, using spacers (choice of 2, 3 or 5 mm)

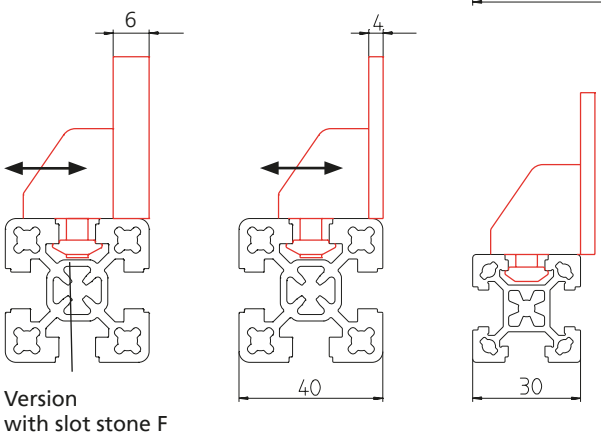

Panels and accessories

Order instruction:

- Purchase only in lot sizes and a multiple of that see product table below

- For fixing cables and hoses
- It is possible to insert it into the profile slot retrospectively

Material: Black plastic

Vario-Quick holding block K/KK

Type K



Type KK



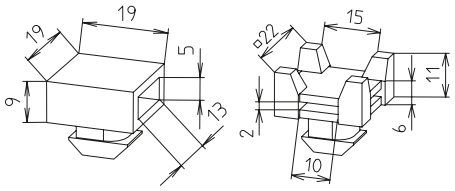

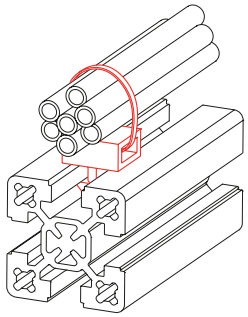

Code No.	Type	lot sizes	Version
40081251	Holding block K	10, 20, 30... pcs	30 slot geometry
40181251	Holding block K	10, 20, 30... pcs	40 slot geometry
40181271	Holding block KK	10, 20, 30... pcs	40 slot geometry

Tube clamp

- For fixing tubes, hoses and cables

Material: Stainless steel, galvanised fixing set



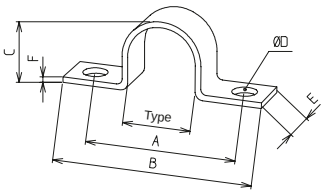

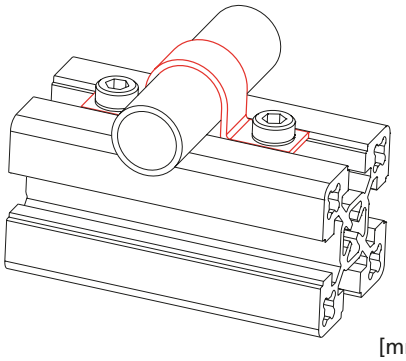

[mm]

Code No.	Type	lot sizes	A	B	C	D	E	F
40105401	Ø6	10, 20, 30... pcs	28	41.5	6.8	6.5	12	1
40105411	Ø8	10, 20, 30... pcs	28	41.5	8.5	6.5	12	1
40105421	Ø10	10, 20, 30... pcs	33	46	10.5	6.5	12	1
40105431	Ø12	10, 20, 30... pcs	33	46	13	6.5	12	1
40105441	Ø14	10, 20, 30... pcs	35	48	15	6.5	12	1
40105451	Ø18	10, 20, 30... pcs	40	53	19.5	6.5	12	1.5
40105461	Ø20	10, 20, 30... pcs	40	53	21.2	6.5	12	1.5
40105471	Ø21.3	10, 20, 30... pcs	40	53	22.5	6.5	12	1.5
40105481	Ø27	10, 20, 30... pcs	47	60	28	6.5	12	1.5
Fixing set (for 10 tube clamps)								
40005491	30 slot geometry	10, 20, 30... pcs	–	–	–	–	–	–
40105491	40 slot geometry	10, 20, 30... pcs	–	–	–	–	–	–

Vario-Quick cable bracket

- For routing cables and hoses
- Simply screwed into the slot
- Can be opened and reused without any problem

Material: Black plastic



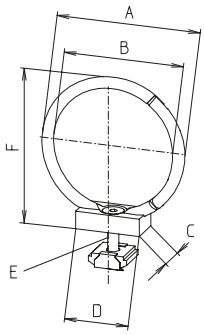

Slot stone (N) version

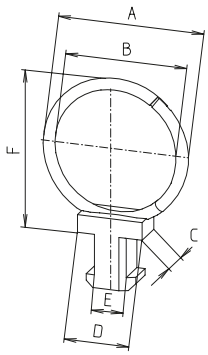

Hammer foot (HF) version

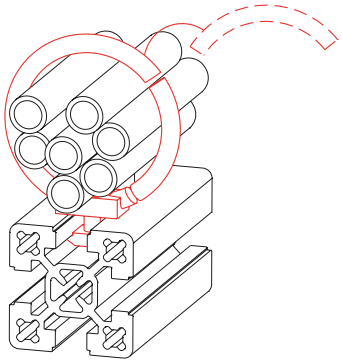

[mm]

Code No.	Type	lot sizes	Slot geometry	A	B	C	D	E	F
40081401	15 HF	10, 20, 30... pcs	30	28.5	17	10	19	9.5	28.5
40181401	15 HF	10, 20, 30... pcs	40	28.5	17	10	19	9.5	28.5
40081441	15 N	10, 20, 30... pcs	30	28.5	17	12	20	M 5	28.5
40181521	15 N	10, 20, 30... pcs	40	28.5	17	12	20	M 5	28.5
40081411	25 HF	10, 20, 30... pcs	30	36.5	25	10	19	9.5	36.5
40181411	25 HF	10, 20, 30... pcs	40	36.5	25	10	19	9.5	36.5
40081451	25 N	10, 20, 30... pcs	30	36.5	25	12	20	M 5	36.5
40181531	25 N	10, 20, 30... pcs	40	36.5	25	12	20	M 5	36.5
40081421	35 HF	10, 20, 30... pcs	30	47.5	35	10	19	9.5	47.5
40181421	35 HF	10, 20, 30... pcs	40	47.5	35	10	19	9.5	47.5
40081461	35 N	10, 20, 30... pcs	30	47.5	35	12	20	M 5	47.5
40181541	35 N	10, 20, 30... pcs	40	47.5	35	12	20	M 5	47.5
40081431	45 HF	10, 20, 30... pcs	30	56.5	45	10	19	9.5	56.5
40181431	45 HF	10, 20, 30... pcs	40	56.5	45	10	19	9.5	56.5
40181551	45 N	10, 20, 30... pcs	40	56.5	45	12	20	M 5	56.5

Cable straps with velcro



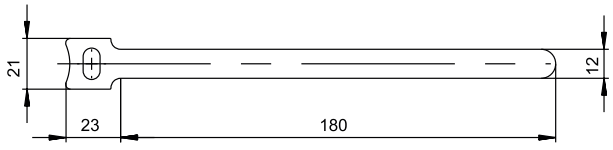

Code No.	Scale of pack quantities
91815	5, 10, 15... piece

Panels and accessories

Sliding door profile

- The sliding door profile is inserted into the longitudinal slot of the BLOCAN® profile. Then the bead moulding is placed in the bottom sliding door profile. As illustrated in the diagram, the panels can now be inserted.

Material: Black plastic

Panel cut length:
Frame internal height -17 mm for 6 mm panels and -22 mm for 8 mm panels.

For sliding doors with a profile frame, the sliding piece on page 278 or the roller module in the safety guard section on page 458 must be used.

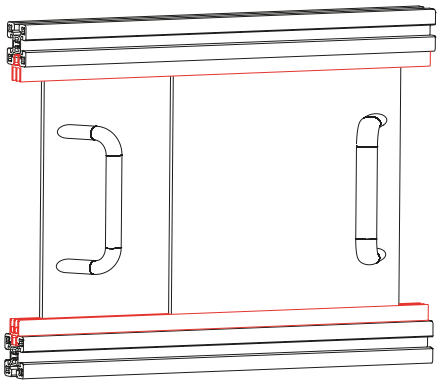



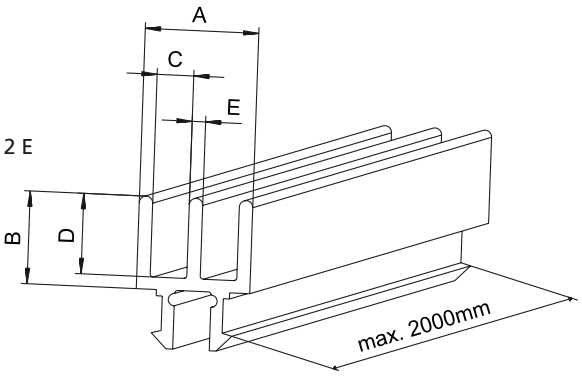



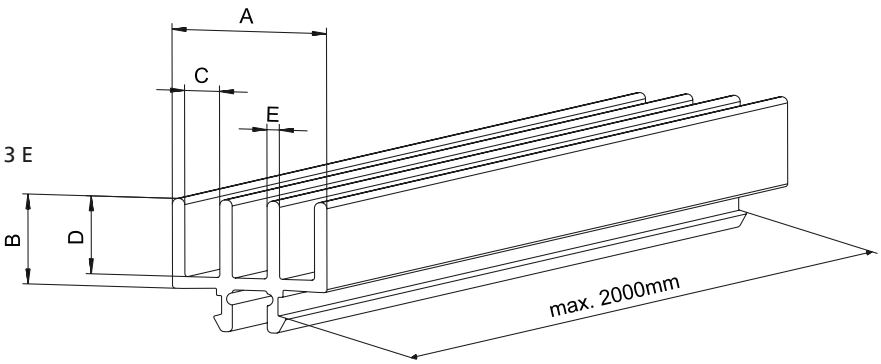

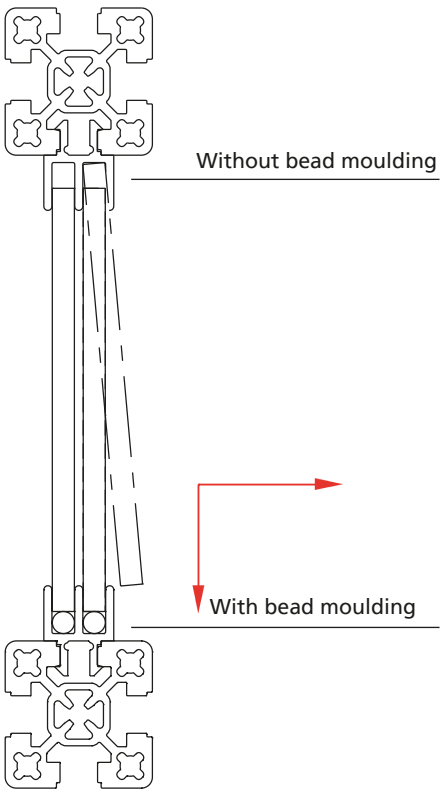

[mm]

Code No.	Type	Slot geometry	A	B	C	D	E
Without bead moulding							
4000553	2E, cut to size	30	19	15	6,2	12,6	2
4000551	2E, bar						
4000593	3E, cut to size	30	27,4	15	6,2	13	2,2
4000591	3E, bar						
4010555	2E, cut to size	40	18,6	15	6	13	2,2
4010551	2E, bar						
4010557	2E, cut to size	40	28	17,5	8,3	15	6
4010556	2E, bar						
On request	3E, cut to size	40	27,4	15	6,2	13	2,2
On request	3E, bar						
With bead moulding							
4000552	2E, cut to size	30	19	15	6,2	12,6	2,2
4000550	2E, bar						
4000592	3E, cut to size	30	27,4	15	6,2	13	2,2
4000590	3E, bar						
4010552	2E, cut to size	40	18,6	15	6	13	2,2
4010550	2E, bar						
4010554	2E, cut to size	40	28	17,5	8,3	15	6
4010553	2E, bar						
On request	3E, cut to size	40	27,4	15	6,2	13	2,2
On request	3E, bar						

Feet, castors and accessories

Versions



Foot -plastic-



Levelling foot



Eye bolt



Connecting plate for foot



Foundation bracket -steel-



Foundation bracket -aluminium-



Base plate



Clamp FKV / FV



Base bracket

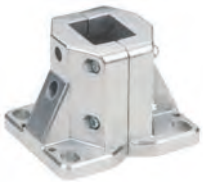

Base clamp FVV



Steering roller



Fixed castor



Foot rest FSH

Table of contents

Feet, castors and accessories

Foot -plastic- ..... p. 294

Levelling foot ..... p. 295

Eye bolt ..... p. 295

Connecting plate for foot ..... p. 296

Foundation bracket -steel- ..... p. 298

Foundation bracket -aluminium- ..... p. 299

Base plate ..... p. 300

Clamp FKV / FV ..... p. 301

Base bracket ..... p. 301

Base clamp FVV ..... p. 302

Steering roller ..... p. 304

Fixed castor ..... p. 305

Foot rest FSH ..... p. 306

Feet, castors and accessories

Foot –plastic–

- Visually attractive
- Alternative to conventional levelling feet
- Height adjustment without tools

Material: Black plastic

Includes:
Complete foot with fastenings (galvanised) for connection to one profile.



Fixing in the slot



Fixing to the face



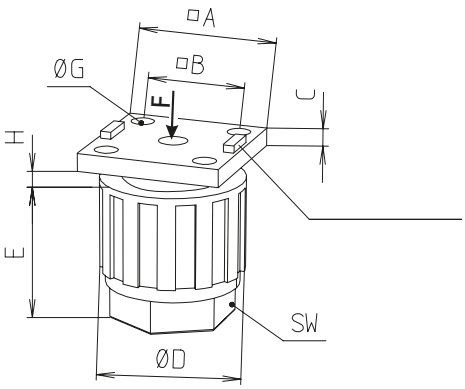

H = height adjustment

Centring pin
(if necessary, can be removed with a pliers)

[mm]

Code No.	Slot geometry	A	B	C	D	E	G*	Max. H	Wrench size	F [N]
Fixing in the slot and to the face of the profile										
4008301	30	30	20.5	5	30	29.5	4.5	15	22	1000
4018301	40	40	28	5	40	39.5	6.6	23	30	1200

Levelling foot



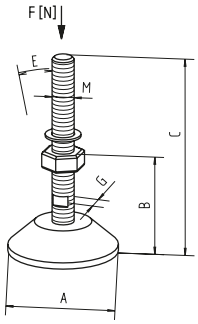

Material:
Galvanised steel,
black plastic pivot plate.
Fixation with foot
connecting plates.
See page 296.

[mm]

Code No.	Type	Version	A	B	C	M	E	G	F [N]
4006304	M8		47	20	52	M8	15°	12	1500
4016302	M10		50	25	93	M10	15°	12	3000
4016303	M12		80	24	117	M12	15°	12	7000
4026301	M16	Corrosion-resist.	80	29	156	M16	15°	13	10000
4046301	M20		60	39	185	M20	15°	16	10000
4696301	M20		100	39	185	M20	15°	16	10000
4696302	M20		123	61	207	M20	15°	16	20000

Levelling foot with vibration absorber

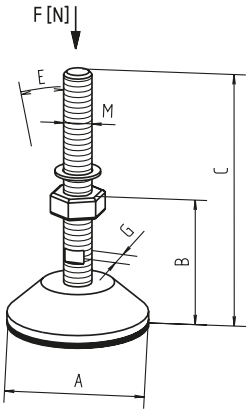

From M10

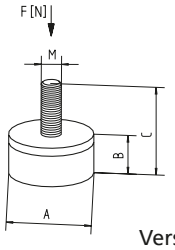

Version: M6, M8

Material:
Galvanised steel
Black plastic pivot plate.
Fixation with foot
connecting plates.
See page 296

Code No.	Type	Version	A	B	C	M	E	G	F [N]
4006311	M6		25	12	31	M6	–	–	520
4016311	M8		30	15	35	M8	–	12	760
4016312	M10		50	25	94	M10	15°	12	3000
4016313	M12		80	40	119	M12	15°	12	7000
4026311	M16	Corrosion-resist.	80	32	159	M16	15°	13	10000
4046311	M20	.	60	42	188	M20	15°	16	10000
4696311	M20		100	39	188	M20	15°	16	10000
4046312	M20		123	70	215	M20	15°	16	10000

Eye bolt



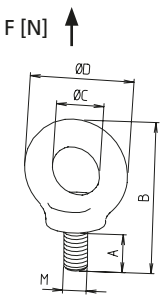

Material: Galvanised steel
C 15 fixation with foot
connecting plates.
See page 296

[mm]

Code No.	Type	Version	A	B	C	D	M
4000300	M6	DIN 580	12	39	13,5	28	M6
4000301	M8	DIN 580	13	49	20	36	M8
4000302	M10	DIN 580	17	62	25	45	M10
4000303	M12	DIN 580	20,5	73,5	30	54	M12

Feet, castors and accessories

Connecting plate for levelling feet

- Connecting plate with tapped hole for feet.
- Also suitable for taking eye bolts.

Includes:
Connecting plate incl. fastenings





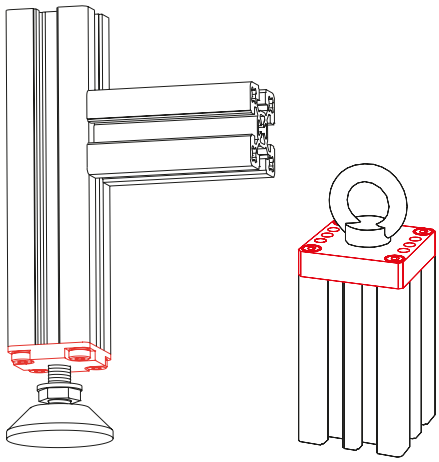

For feet and eye bolts, please see page 295

(1) Die-cast aluminium

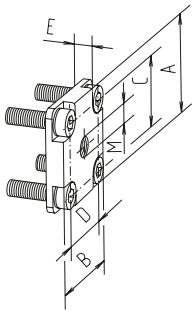

(2) Aluminium

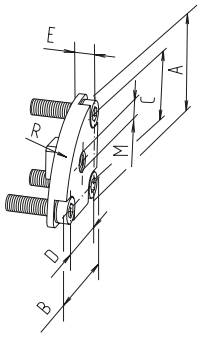

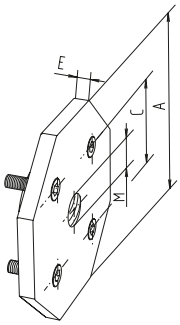

(3) Gravity die-cast aluminium

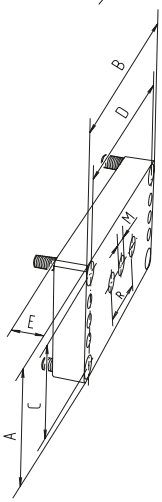

(4) Die-cast aluminium

[mm]

Code No.	Type	Connec-tion	See figure	A	B	C	D	E	M	R
4006401	W/KLW 30-30	M6	2	30	30	–	–	6	M6	R 29
4006402	W/KLW 30-45	M6	2	30	30	–	–	6	M6	R 29
4006403	W/KLW 30-60	M6	2	30	30	–	–	6	M6	R 29
4006404	W/KLW 30-90	M6	2	30	30	–	–	6	M6	R 29
4034404	F-GG 40x80	M8	4	40	80	28	68	7	M8	–

[mm]

Code No.	Type	Connec-tion	See figure	A	B	C	D	E	M	R
4034402	F-GG 40x80	M10	4	40	80	28	68	7	M10	–
4034403	F-GG 40x80	M12	4	40	80	28	68	7	M12	–
4016401	W/KLW 40-30	M8	2	40	40	–	–	8	M8	R 37
4016402	W/KLW 40-45	M8	2	40	40	–	–	8	M8	R 37
4016403	W/KLW 40-60	M8	2	40	40	–	–	8	M8	R 37
4016404	W/KLW 40-90	M8	2	40	40	–	–	8	M8	R 37
4085401	F-G 50x50/F-GG 50x50/F-2G 50x50/F-3G 50x50	M8	1	50	50	38	38	7	M8	–
4085402	F-G 50x50/F-GG 50x50/F-2G 50x50/F-3G 50x50	M10	1	50	50	38	38	7	M10	–
4224402	F-G 60x60/F-GG 60x60/F-2G 60x60/F-3G 60x60	M8	1	60	60	43/48	43/48	6.5	M8	–
4224403	F-G 60x60/F-GG 60x60/F-2G 60x60/F-3G 60x60	M10	1	60	60	43/48	43/48	6.5	M10	–
4044404	F-G 80x80/F-GG 80x80/F-2G 80x80/F-3G 80x80	M10	1	80	80	68	68	8	M10	–
4044405	F-G 80x80/F-GG 80x80/F-2G 80x80/F-3G 80x80	M12	1	80	80	68	68	8	M12	–
4044402	F-G 80x80/F-GG 80x80/F-2G 80x80/F-3G 80x80	M16	1	80	80	68	68	8	M16	–
4044403	F-G 80x80/F-GG 80x80/F-2G 80x80/F-3G 80x80	M20	1	80	80	68	68	8	M20	–
4054402	8x40	M16	3	97	–	45	–	8	M16	–
4054403	8x40	M20	3	97	–	45	–	8	M20	–

Feet, castors and accessories

Order instruction:

- Purchase only in lot sizes and a multiple of that see product table below

Foundation bracket –sheet steel–





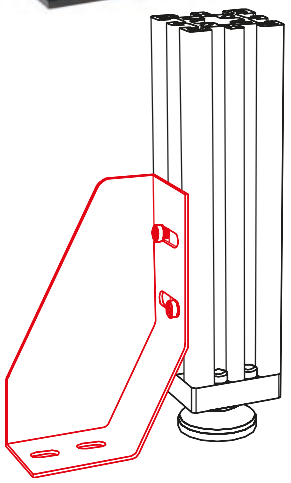

- For fixing frames, work tables and machines
- Foundation bracket can be retrospectively fixed to the profile with slot stone -R- see page 256

Material:
Sheet steel St 37, 3 mm thick, black textured paint.

Includes: Complete set including fastenings

Socket head cap screw
M8x12, DIN 7984
Slot stone -R-

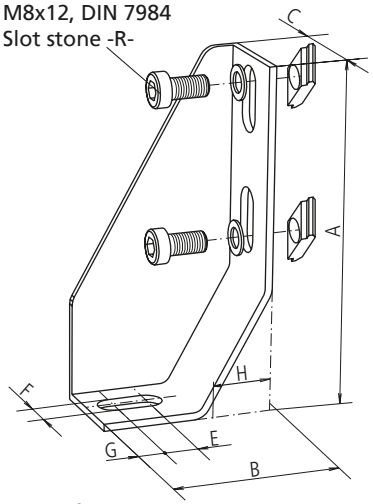

Type left 100x50x28

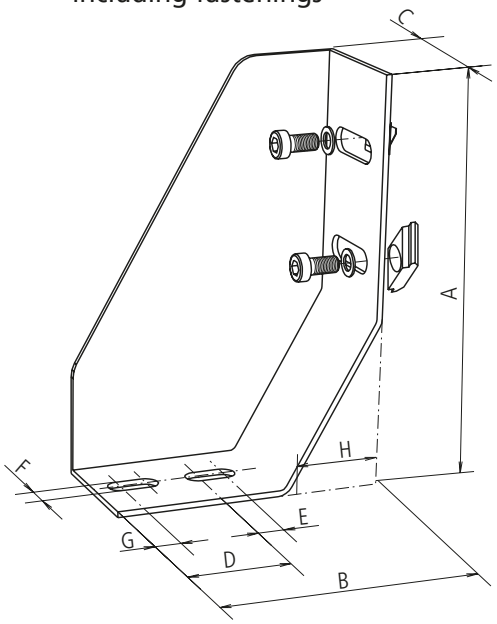

Type left 150x100x48

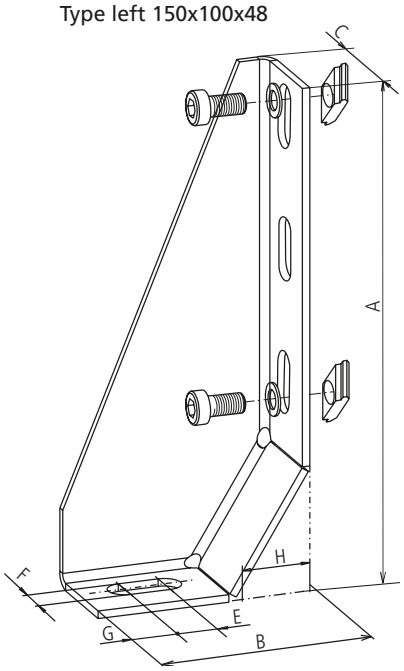

Type left 200x85x38

[mm]

Code No.	Type	A	B	C	D	E	F	G	H
4001300	left 100x50x28	100	50	28	–	10	9	8	18
4001301	right 100x50x28	100	50	28	–	10	9	8	18
4021300	left 150x100x48	150	100	48	40	10	9	10	32
4021301	right 150x100x48	150	100	48	40	10	9	10	32
4011306	left 200x85x38	200	85	38	–	19	9	16	30
4011305	right 200x85x38	200	85	38	–	19	9	16	30

Code No.	Type	lot sizes
4016611	High performance anchor M8x110	4, 8, 12... pcs

Order instruction:

- Purchase only in lot sizes and a multiple of that see product table below

Foundation bracket –aluminium–

- For fixing frames, work tables and machines
- Angle bracket is fixed to the profile with slot stones -N-. See page 254

Material:
Black powder-coated gravity die-cast aluminium

Includes: Complete set including fastenings



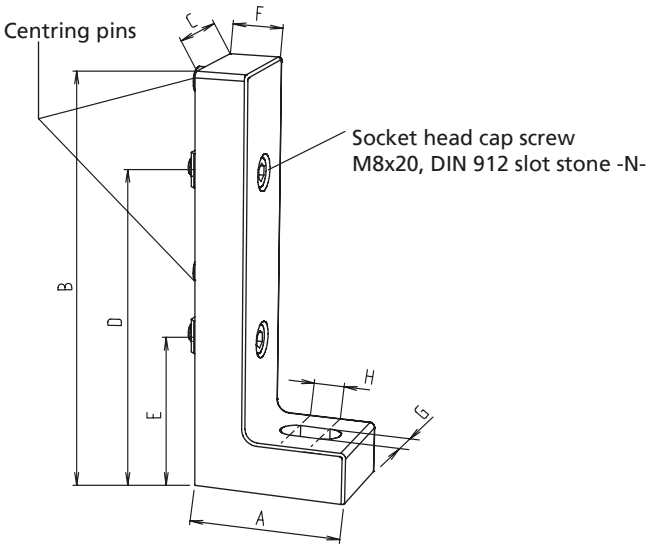

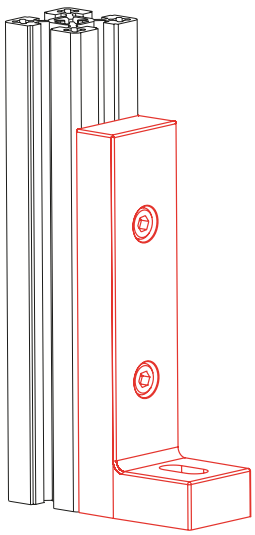

Code No.	Type	A	B	C	D	E	F	G	H
4011302	40 slot geometry	60	160	40	120	55	20	11	12

Code No.	Type	lot sizes
4016612	Floor fixing M8x115	4, 8, 12... pcs

Feet, castors and accessories

Order instruction:

- Purchase only in lot sizes and a multiple of that see product table below

- Optionally available with hole, rubber foot, foot or steering roller
- Optional filling (steel plate) available to raise the overturning moment

Material:
Vibration finished gravity die-cast aluminium (powder-coating available on request)



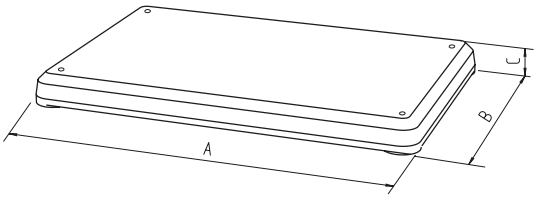

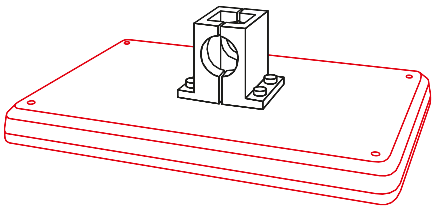

Code No.	Type	A	B	C
230 000 100 20	FP	375	250	30

1= Joint hole

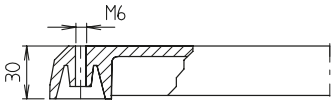

2= Rubber foot

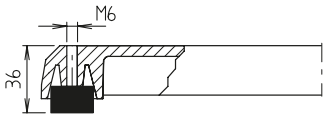

3= Foot

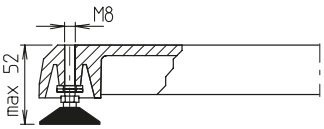

4= Steering roller with brake

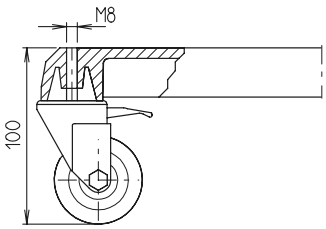

_= Without filling, overturning moment 3 Nm

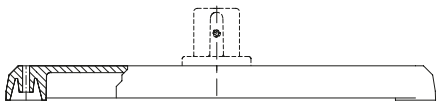

Y= Cavity with steel plate (m= 4.6 kg), Overturning moment 6 Nm

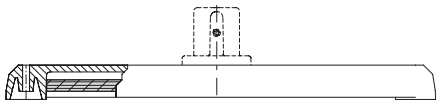

Clamp



FKV



Z

Material: Aluminium,
stainless steel fixing
For further clamping elements,
please refer to the catalogue
"Connecting Technology"

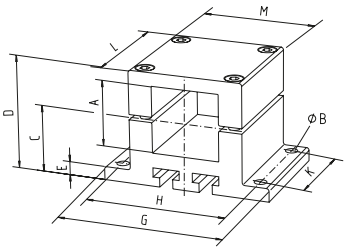

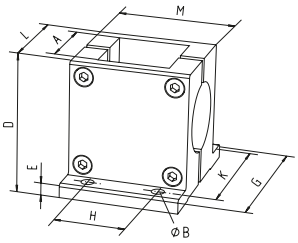

[mm]

Code No.	Type	A	Ø B	C	D	E	G	H	K	L	M
52300005030	FKV 30	30.2	7	30	51	6	84	70	40	56	56
52400005030	FKV 40	40.3	7	40	68	8	97	83	54	68	68
52500005030	FKV 50	50.4	9	50	85	10	125	105	65	85	85
52600005030	FKV 60	60.3	9	62.5	111	12	145	120	80	105	105
52800005030	FKV 80	80.4	11	80	136	16	170	148	80	126	126
53300005030	FV 30	30.2	7	–	58	6	70	28	56	42	56
53400005030	FV 40	40.3	7	–	74	8	85	40	70	56	68
53500005030	FV 50	50.4	9	–	92	10	110	50	90	70	84
53600005030	FV 60	60.4	9	–	112.5	12	137	80	120	97	105
53800005030	FV 80	80.4	11	–	142	16	156	80	135	112	126

Order instruction:

- Purchase only in lot sizes and a multiple of that see product table below

Base bracket BAK-80



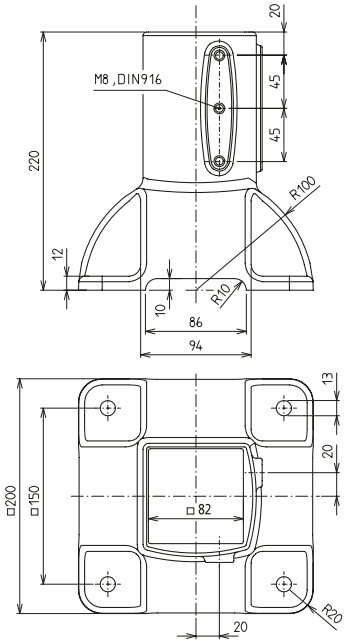

Material: Silver powder-coated
gravity die-cast aluminium,
stainless steel fixing

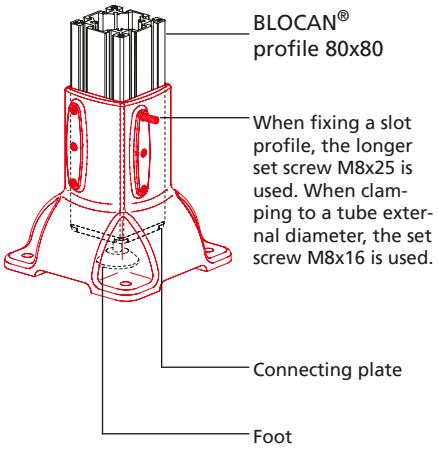

Code No.	Type	lot sizes	Version
4040501	Base bracket BAK-80	–	with set screw M8x25 DIN916-A
4016302	Levelling foot M10	–	Length 93 mm, plate Ø 50 mm
4019302	Levelling foot M10, corrosion-resistant	–	Length 93 mm, plate Ø 50 mm
4044404	Connecting plate for levelling foot	–	for BLOCAN profile S/F-80

Code No.	Type	lot sizes
4016611	High performance anchor M8x110	4, 8, 12... pcs
4016605	Set screws M8x16-A2 DIN EN ISO 4029	4, 8, 12... pcs

Feet, castors and accessories

Base clamp FVV



- Base clamp to take size 40 BLO-CAN® profiles or size 40 square tubes.
- Set screws can be used to compensate for unevenness. Supporting shims, placed under the foot, prevent the set screws from digging into the floor.

Material: ground finished die-cast aluminium, zinc plated fixing

Supporting/Levelling shims



- The levelling shims give the foot clamp a full contac surface on uneven ground.

Material: aluminium

Code No.	Type	Includes
40143011	Levelling shims for FVV 40	4 1-mm shims, 1 0.5-mm shim

FVV-NH

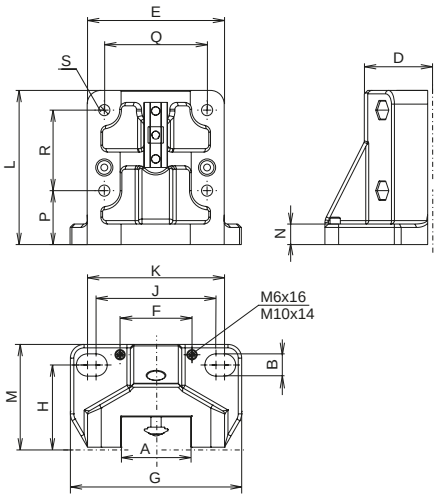

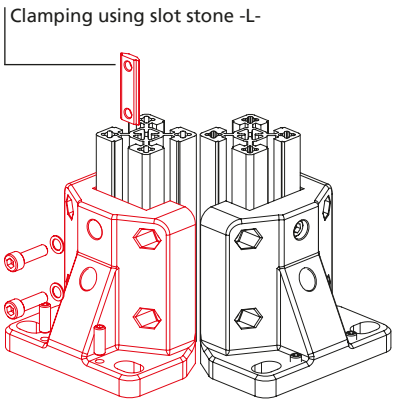

Code No.	Type	A	C	D	E	F	G	H	J	K	L	M	N	P	Q	R	S	Weight
4014310	FVV-NH 40	40.4	12.5	39.5	80	42	100	50	70	80	90	62.5	12	31.5	60	47	Ø6.5	399 g

FVV-N

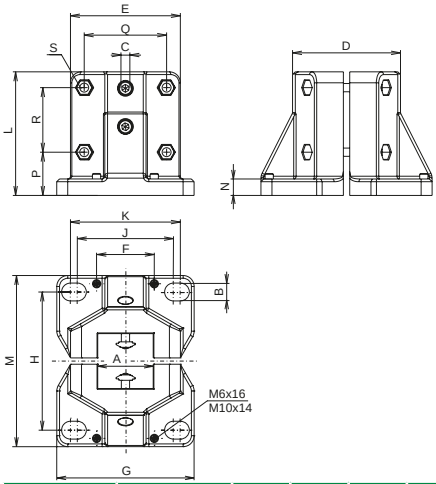

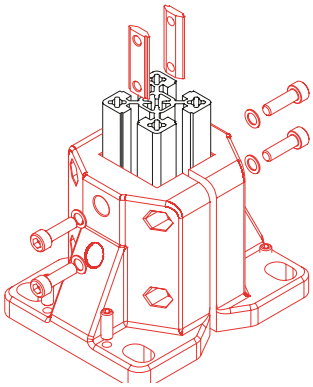

Code No.	Type	A	B	C	D	E	F	G	H	J	K	L	M	N	P	Q	R	S	Weight
4014311	FVV-N 40	40.4	12.5	6.5	79	80	42	100	100	70	80	90	125	12	31.5	60	47	M6x45	797 g

FVV-S

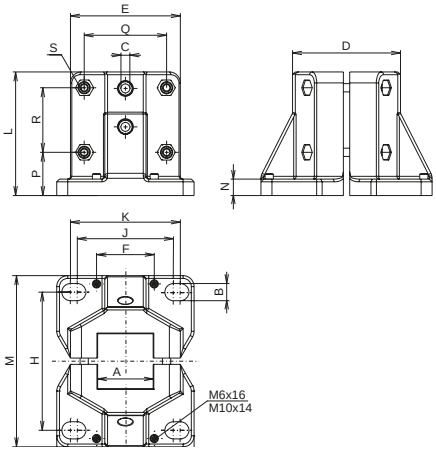

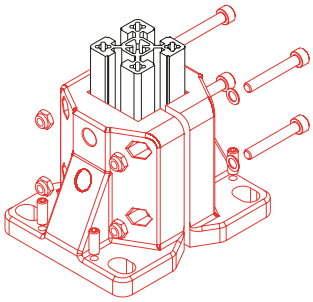

Code No.	Type	A	B	C	D	E	F	G	H	J	K	L	M	N	P	Q	R	S	Weight
4014312	FVV-S 40	40.4	12.5	6.5	79	80	42	100	100	70	80	90	125	12	31.5	60	47	M6x45	805 g

FVV-D

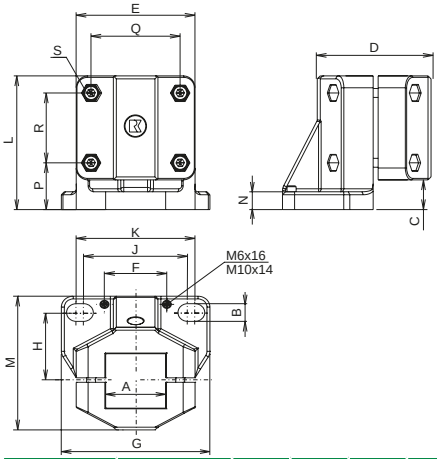

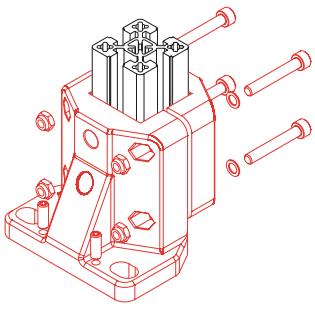

Code No.	Type	A	B	C	D	E	F	G	H	J	K	L	M	N	P	Q	R	S	Weight
4014313	FVV-D 40	40.4	12.5	20	75	80	42	100	50	70	80	90	98	12	31.5	60	47	M6x45	633 g

Feet, castors and accessories

Lockable steering roller

- The steering roller mobilises frames, tables and superstructures. It is available with a 1-hole fixing or with fixing plate. In addition, each version has a combined roller and swivel locking device. Both the roller and the swivel head have ball bearings, which ensures that they run smoothly even under load. The rollers are not electrically conductive.

Material: Galvanised steel

Includes: Depending on the version, with connecting plate or slot stone.

With slot stone



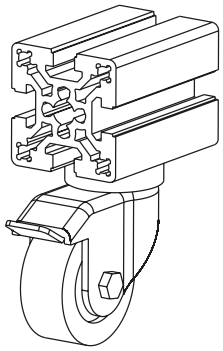

1

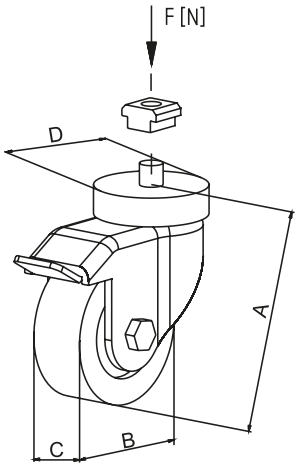

With connecting plate



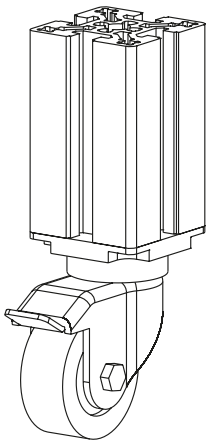

2

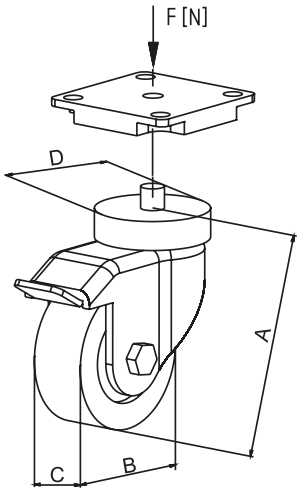

[mm]

Code No.	Type	Suitable for:	A	B	C	D	Resist. F [N]
4016646	With slot stone	30 slot geometry (1)	70	50	20	39	400
4016648	With slot stone	40 slot geometry (1)	70	50	20	39	400
4086644	F-G 50x50/F-GG 50x50/F-2G 50x50/F-3G 50x50	F-profiles 50 (2)	70	50	20	39	400
4226644	F-G 60x60/F-GG 60x60/F-2G 60x60/F-3G 60x60	F-profiles 60-L (2)	100	75	25	39	600
4036644	F-GG 40x80	Profiles 40x80 (2)	70	50	20	39	400
4046644	F-G 80x80/F-GG 80x80/F-2G 80x80	Profiles 80 (2)	100	75	25	39	600
4046648	F-G 80x80/F-GG 80x80/F-2G 80x80	Profiles 80 (2)	133	100	32	53	900
4056644	8x40	Profiles 8x40 (2)	100	75	25	39	600

Fixed castor

- The fixed castor is the ideal complement to the steering roller. Combining 2 fixed castors with steering rollers makes it easier to manoeuvre the superstructure. Fixed castors should be mounted on the front end. The rollers are not electrically conductive.

Material: Galvanised steel

Includes: Depending on the version, with connecting plate or slot stone.

With slot stone



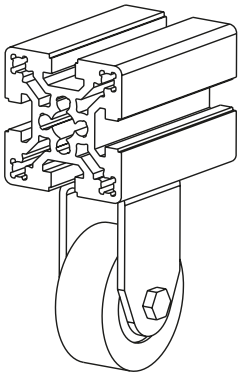

1

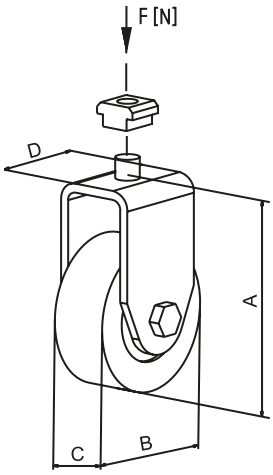

With connecting plate



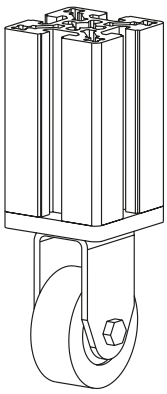

2

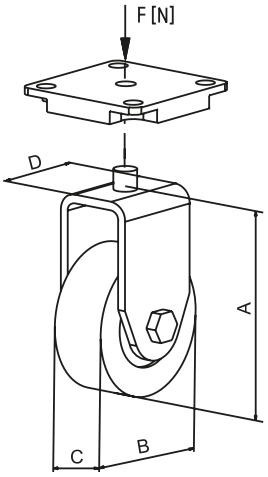

[mm]

Code No.	Type	Suitable for:	A	B	C	D	Resist. F [N]
4006647	With slot stone	30 slot geometry (1)	70	50	20	34	400
4016647	With slot stone	40 slot geometry (1)	70	50	20	34	400
4086645	F-G 50x50/F-GG 50x50/F-2G 50x50/F-3G 50x50	F-profiles 50 (2)	70	50	20	34	400
4226645	F-G 60x60/F-GG 60x60/F-2G 60x60/F-3G 60x60	F-profiles 60-L (2)	100	75	25	34	600
4036645	F-GG 40x80	Profiles 40x80 (2)	70	50	20	34	400
4046645	F-G 80x80/F-GG 80x80/F-2G 80x80	Profiles 80 (2)	100	75	25	34	600
4046649	F-G 80x80/F-GG 80x80/F-2G 80x80	Profiles 80 (2)	133	100	32	53	900
4056645	8x40	Profiles 8x40 (2)	100	75	25	34	600

Feet, castors and accessories

Foot rest FSH

- Individual, infinitely variable adjustment to different persons
- Height adjustment without time-consuming assembling by means of spring adjustment
- By slightly lifting the tread the height of the system can be quickly adjusted and locks automatically when released

Material: Clear anodised extruded aluminium profile tread, polyamide plastic sliding pieces, galvanised steel parts



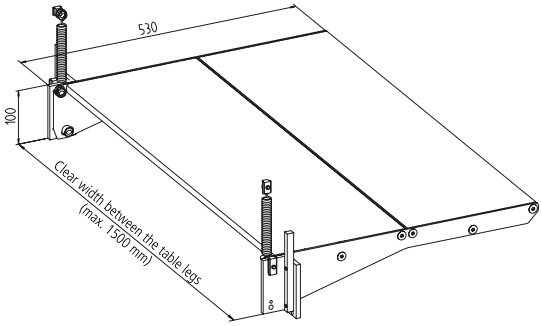

Application example

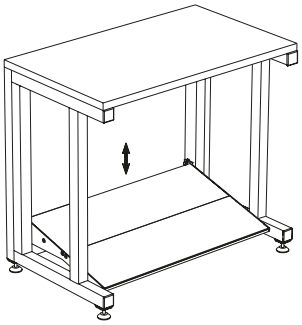

Code No.	Suitable for profile
4010642 _ _ _ _	All as of 40 slot geometry (except F-50 and special profiles)

Clear width [mm]



Fittings

Versions



Door lock -KL type 2-



Butt hinge -aluminium-



Butt hinge -plastic-



Lift off hinge -aluminium-



Lift off hinge -plastic-



piano hinge



Lever cylinder lock



Ball catch



Magnetic lock



Magnetic lock universal



Ball catch universal



Slam Latch



Door stopper



Handle



Handle profile



Handle/Handrail



Safety switch AZ 15zvr



Safety switch AZM

Table of contents

Fittings

Door lock -KL- ..... p. 310
Butt hinge -aluminium- ..... p. 312
Butt hinge -plastic- ..... p. 313
Lift off hinge -aluminium- ..... p. 314
Lift off hinge -plastic- ..... p. 311
Piano hinge ..... p. 316
Lever cylinder lock ..... p. 318
Ball catch ..... p. 318
Magnetic lock ..... p. 319
Magnetic lock universal ..... p. 320
Ball catch universal ..... p. 321
Slam Latch ..... p. 322
Door stopper ..... p. 323
Handle ..... p. 323
Handle profile ..... p. 324
Handle/Handrail ..... p. 324

Electrical accessories

Safety switch AZ 15zvr ..... p. 326
Safety switch AZM ..... p. 325

Fittings

Door lock -KL-

- Installation between two clamping profiles without additional profile machining
- Version available with door handle or panic lock

Material:
Gravity die-cast aluminium, galvanised steel
Includes:
complete door lock with cylinder lock, handle set and fastenings



Sliding door version

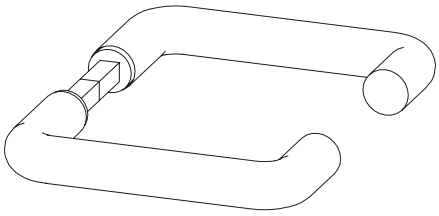

Handle set
with hinged door
and sliding door

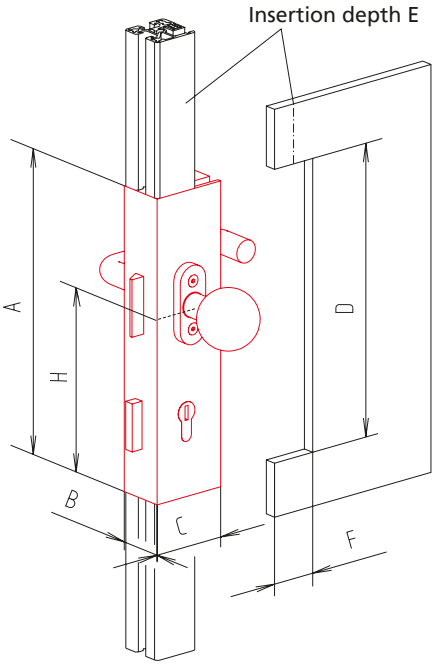

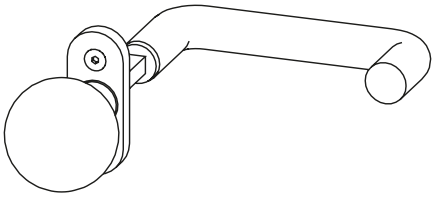

Handle set with
hinged door with panic lock
(one fixed knob,
one door handle)

[mm]

Code No.	Version	A	B	C	D	E	F	H
4210630	For hinged door KL 40, right	255	40	65	242	15	32	161.5
4210631	For hinged door KL 40, left	255	40	65	242	15	32	161.5
4210632	For hinged door KL 40 with panic lock, right	255	40	65	242	15	32	161.5
4210633	For hinged door KL 40 with panic lock, left	255	40	65	242	15	32	161.5
4210636	For sliding door KL 40, right	255	40	65	242	15	32	132
4210637	For sliding door KL 40, left	255	40	65	242	15	32	132

Door lock Typ 2 - KL 40

- Installation between clamping profiles no additional recuired machining

Material: aluminium clear anodized, galvanised steel
Includes:
complete door lock with housing, handle set and fastenings



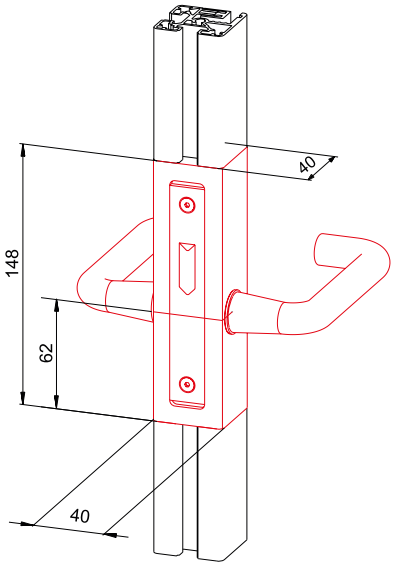

Code No.	Type
4215632	Door lock Typ 2 - KL 40 right without cylinder lock
4215633	Door lock Typ 2 - KL 40 left without cylinder lock



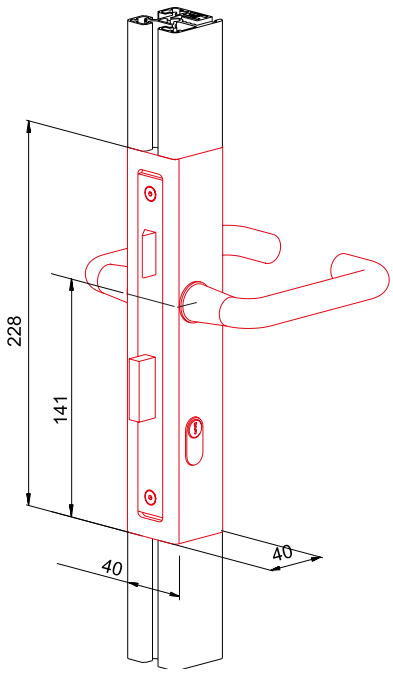

Code No.	Type
4215630	Door lock Type 2 - KL 40 right with cylinder lock
4215631	Door lock Typ 2 - KL 40 left with cylinder lock

Fittings

Butt hinge

- Can be installed on all struts and panels.
  The exact position of the hinge is determined by fixing pins, which can be replaced depending on the purpose.

Material:
Black anodised aluminium.
Galvanised steel.
Complete with fixing set (for profile assembly).



Version 1



Version 2



Version 3

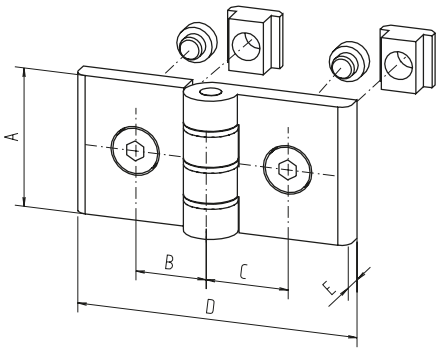

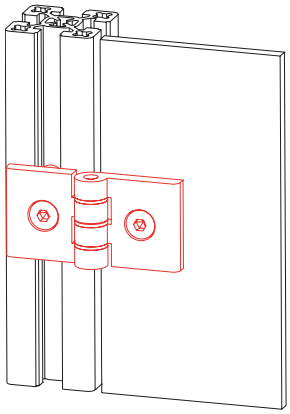

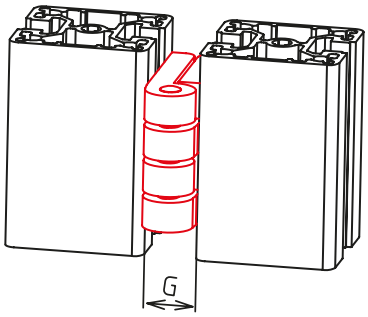

[mm]

Code No.	Type	Version	A	B	C	D	E	G
Butt hinge 2-part								
4005525	30x30	1	50	17	17	56	7	13
4005526	30x30 to 40x40	1	50	17	22	56	7	13
4015525	40x40	2	40	22	22	79	7	15
4045526	40x40 to 60x60	2	40	22	32	79	7	15
4085525	F-50x50	2	40	27	27	79	7	15
4025525	60x60 (except F-60x60)	2	40	32	32	79	7	15
Butt hinge 3-part								
4015517	40	3	45	22	22	123	7	–

Hinge assembly variants:







Order instruction:

- Purchase only in lot sizes and a multiple of that see product table below

Butt hinge

- For installing on all struts and panels
- The exact position of the hinge is determined by fixing pins – these can be bent with a pliers if required

Material:
Black plastic, galvanised steel

Fixing set:
The fixing set is not included in the Order No. and must be ordered separately.



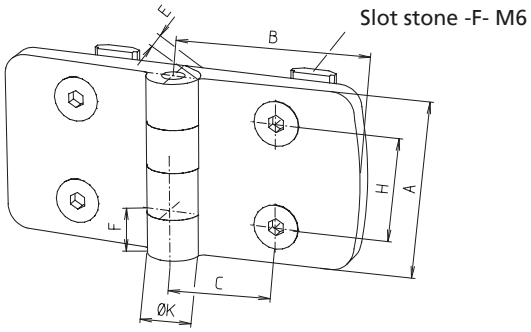

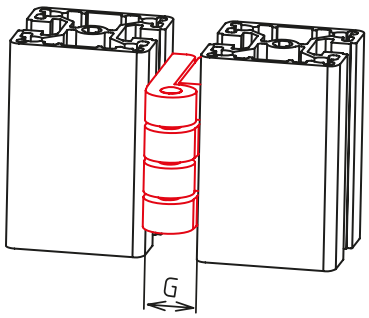

Type	A	B	C	E	F	G	H	K
30	48	29.5	17.5	9	12	18	28	14
40	48	38.5	22.5	9	12	18	28	14
50	48	48.5	27.5	9	12	18	28	14
60	48	57.5	32.5	9	12	18	28	14

Post	Code No. Butt hinge			
	Door profile 30	Door profile 40	Door profile 50	Door profile 60
Profile 30	4008510	–	–	–
Profile 40	4008511	4008514	–	–
Profile 50	4008512	4008515	4008517	–
Profile 60	4008513	4008516	4008518	4008519

Fixing set

Code No. for one hinge half	lot sizes	Slot geometry
4006520	10, 20, 30... pcs	30 (slot stone -F-)
4016520	10, 20, 30... pcs	40 (slot stone -F-)

Fittings

Lift off hinge

- Space-saving installation between two profiles
- Flaps or doors can be dismounted simply by lifting them off

Material:
Black anodised aluminium, galvanised steel.
Complete with fixing set (for profile assembly)



Version 1



Version 2

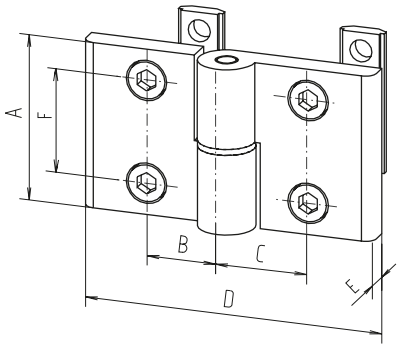

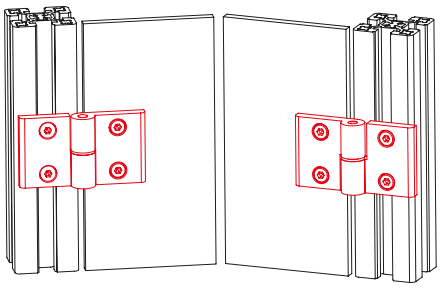

[mm]

Code No.	To slot geometry	Version	A	B	C	D	E	F	G
Lift off hinge 2-part									
4015520	40	1, left	45	22	22	79	7	28	15
4015521	40	1, right	45	22	22	79	7	28	15
4045521	40	1, left	45	22	32	79	7	28	15
4045522	40	1, right	45	22	32	79	7	28	15
Lift off hinge 3-part									
4015515	40	2	45	22	22	123	7	28	–

Lift off hinge (narrow version)

- Can be installed on all struts and panels.
  Flaps or doors can be dismounted simply by lifting them off.

Material:
Black anodised aluminium, galvanised steel.
Complete with fixing set (for profile assembly)



Right version

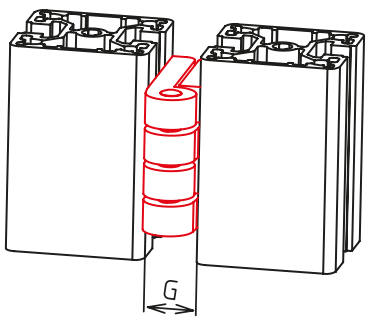

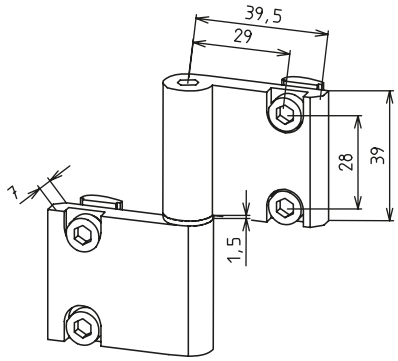

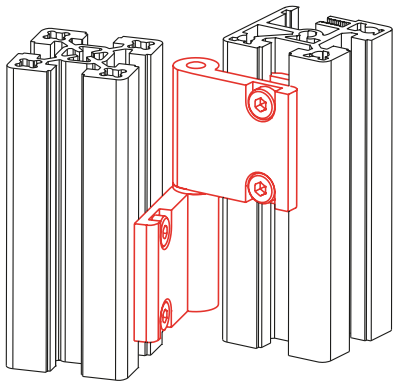

[mm]

Code No.	To slot geometry	Version	G
4015527	30	Left	7.5
4015526	30	Right	7.5
4015523	40	Left	7.5
4015522	40	Right	7.5

Order instruction:

- Purchase only in lot sizes and a multiple of that see product table below

Lift off hinge

- Can be installed on all struts and panels.
- Flaps or doors can be dismounted simply by lifting them off.
- The exact position of the hinge is determined by fixing pins, which can be bent with a pliers if required.
- The sizes can be combined with each other.

Material: Black plastic, galvanised steel parts.

Fixing set:
The fixing set is not included in the Order No. and must be ordered separately.



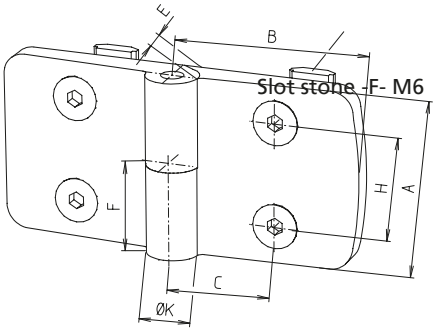

[mm]

Type	A	B	C	E	F	G	H	K
30	48	29.5	17.5	9	24	18	28	14
40	48	38.5	22.5	9	24	18	28	14
50	48	48.5	27.5	9	24	18	28	14
60	48	57.5	32.5	9	24	18	28	14

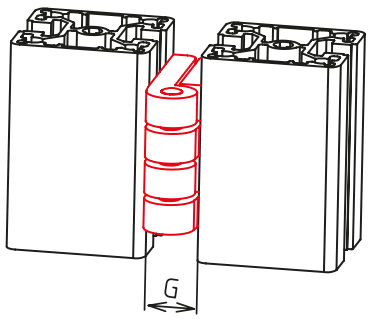

Version	Post	Code No. Lift off hinge			
		Door profile 30	Door profile 40	Door profile 50	Door profile 60
Right	Profile 30	4008530	–	–	–
	Profile 40	4008532	4008540	–	–
	Profile 50	4008534	4008542	4008550	–
	Profile 60	4008536	4008544	4008552	4008560
Left	Profile 30	4008531	–	–	–
	Profile 40	4008533	4008541	–	–
	Profile 50	4008535	4008543	4008551	–
	Profile 60	4008537	4008545	4008553	4008561

Fixing set

Code No. for one hinge half	lot sizes	Slot geometry
4006520	10, 20, 30... pcs	30 (slot stone -F-)
4016520	10, 20, 30... pcs	40 (slot stone -F-)

Fittings

Piano hinge

- Variable in length
- Taylor-made orderable

Material:
aluminium clear anodized
sliding disks plastic
dowel pins, galvanised steel

Includes:
complete with fixing set

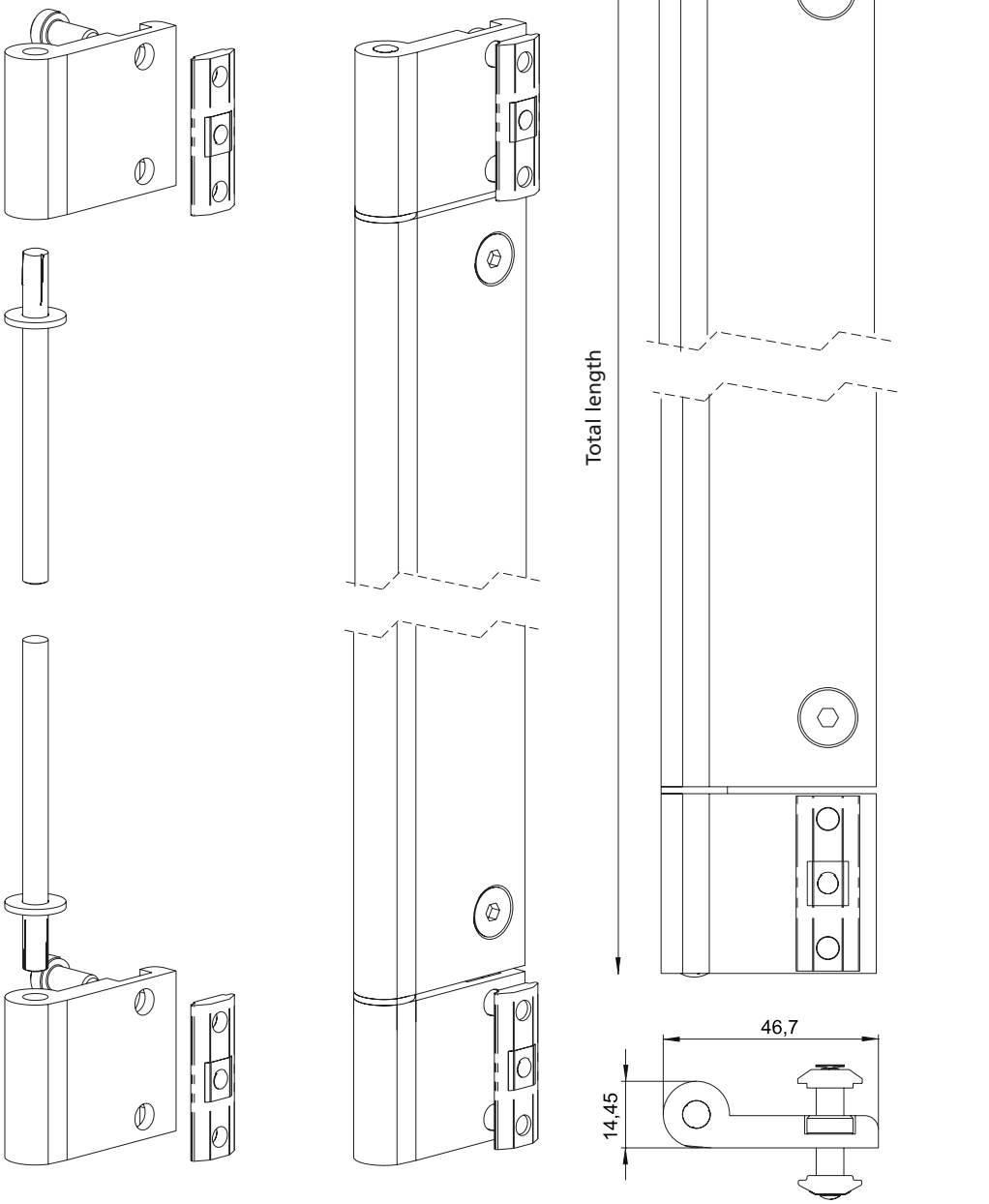

Code No.	Type	length	Max. length	Slot geometry
4010627 _ _ _ _	Band hinge complete	200	2500	40

Total length [mm]



Fittings

Lever cylinder lock

- Complete with 2 keys.
  For locking lightweight doors and flaps

Material: Plastic, galvanised steel.



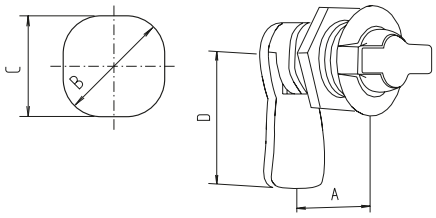

[mm]

Code No.	Type	A	B	C	D
4016600	15	15	22.5	21	45
4026600	25	25	22.5	21	45

Ball catch

Material:
Aluminium, brass
Fixing set:
Galvanised steel

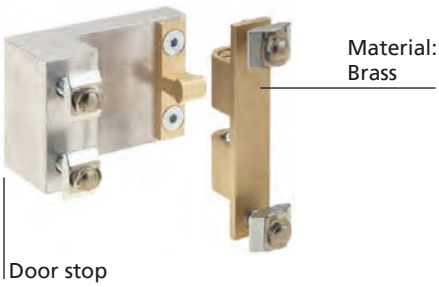

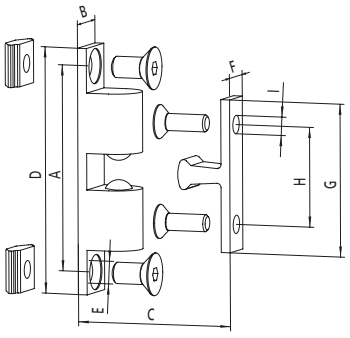

[mm]

Code No.	Type	A	B	C_{min}	D	E	F	G	H	I
4010606	Without door stop	48.5	11.8	15.8	58	5.3	8.6	36	23.5	4.3
4000608	With door stop for fixing profile 30 to 30									
4010607	With door stop for fixing profile 30 to 40									
4010608	With door stop for fixing profile 40 to 40									
4000609	With door stop for fixing profile 50 to 30									
4010609	With door stop for fixing profile 50 to 40									

Magnetic lock

- Suitable from profile size 40
- Complete with fixing set

Material:
Aluminium, plastic, galvanised steel

Magnetic lock with striker – Installed in panel without frame



Magnetic lock with striker – Installed in panel with frame



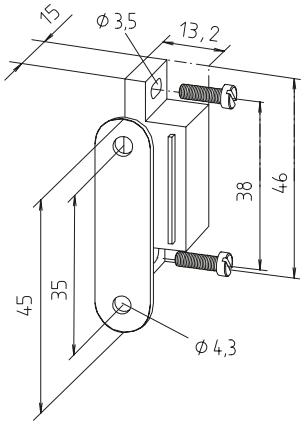

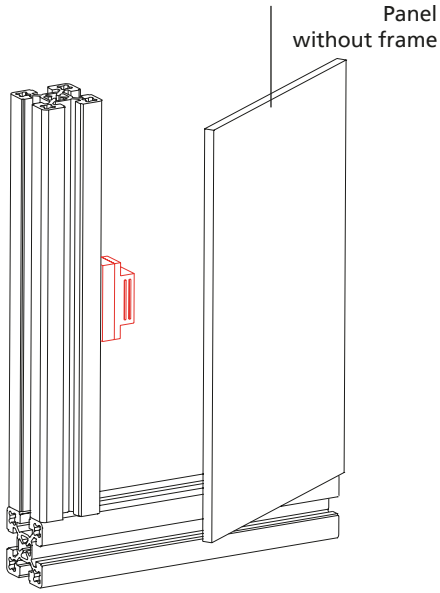

Code No.	Profile assembly	Installation	Sim. to fig.
4010605	All, except 30	Without frame	1
4010604	All, except 30	Profiles centr.	2
4000610	30 to 30	Profiles centr.	2
4010611	40 to 30	Profiles centr.	2
4010612	40 to 30	Profiles flush	3
4080603	50 to 30	Profiles flush	3
4080606	50 to 40	Profiles centr.	2
4080604	50 to 40	Profiles flush	3

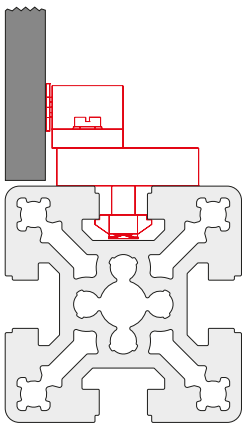
Fig. 1

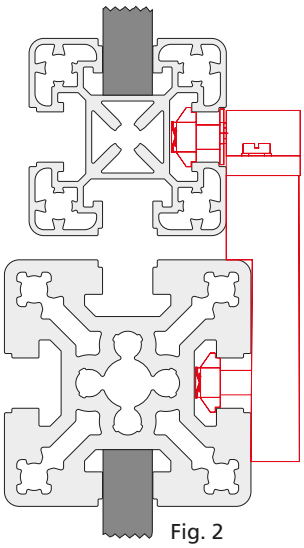
Fig. 2

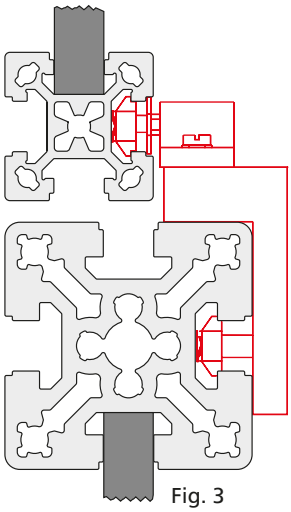
Fig. 3

Fittings

Magnetic lock universal

- Suitable from profile size 30 for all assembly versions
- Holding force 10/20 N depends on mounting direction

Material:
polyamide glasfibre reinforced
steel parts zincplated



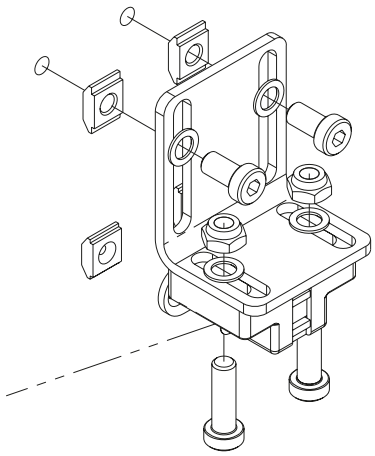

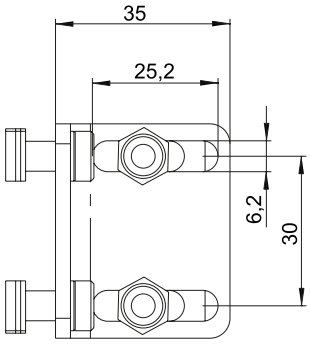

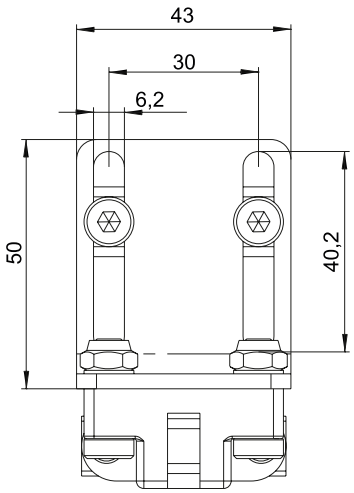

■ Assembly versions

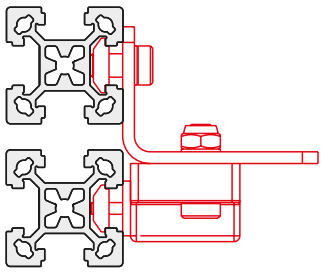

30 to 30 - Profile

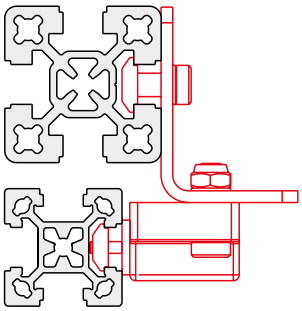

30 to 40 - Profile flush

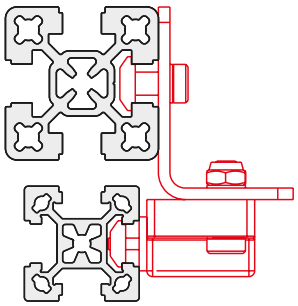

30 to 40 - Profile centred

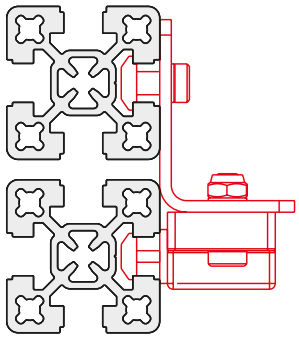

40 to 40 - Profile

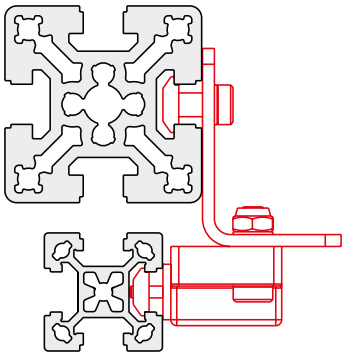

30 to 50 - Profile centred

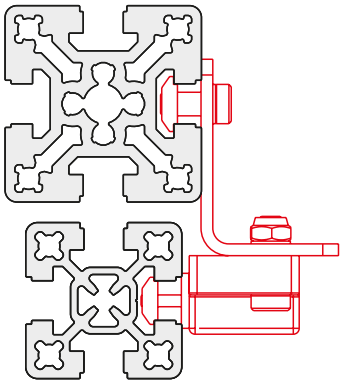

40 to 50 - Profile centred

Code No.	Type	Slot geom.
4010625	Magnetic lock universal with fixing set	30/40
4010626	Magnetic lock universal without fixing set	—

Ball catch universal

- Suitable from profile size 30 for all assembly versions
- Holding force 50 N

Material:
polyamide glasfibre reinforced
steel parts zincplated



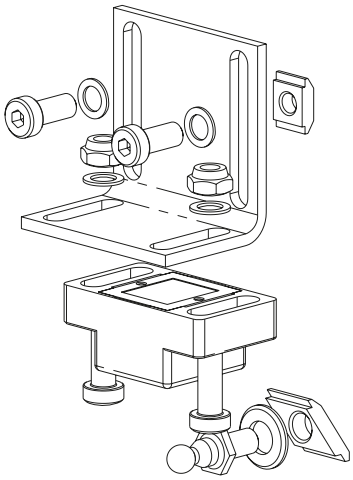

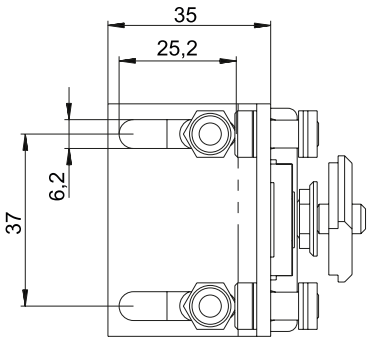

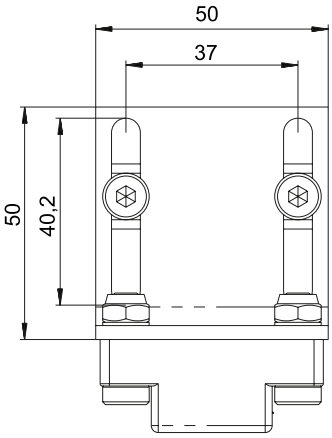

■ Assembly versions

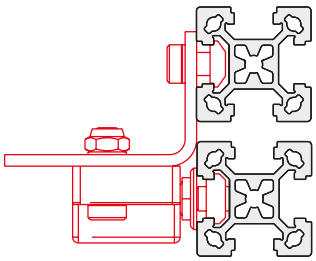
30 to 30 - Profile

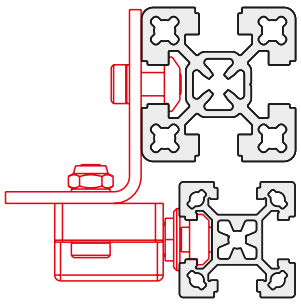
30 to 40 - Profile flush

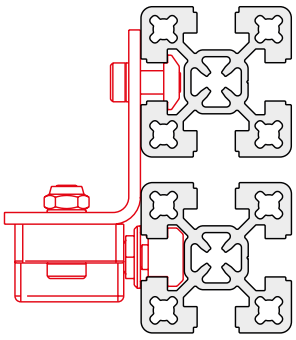
40 to 40 - Profile

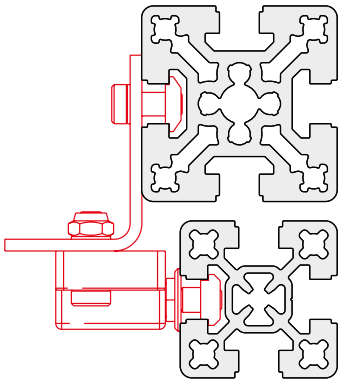
40 to 50 - Profile flush

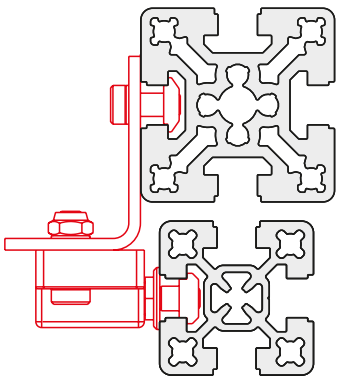
40 to 50 - Profile centred

Code No.	Type	Slot geom.
4010630	Ball catch universal with fixing set	30/40
4010631	Ball catch universal without fixing set	—

Fittings

Slam Latch PRO





Material: die-cast aluminium
black powder-coated
Includes:
complete with fixing set.

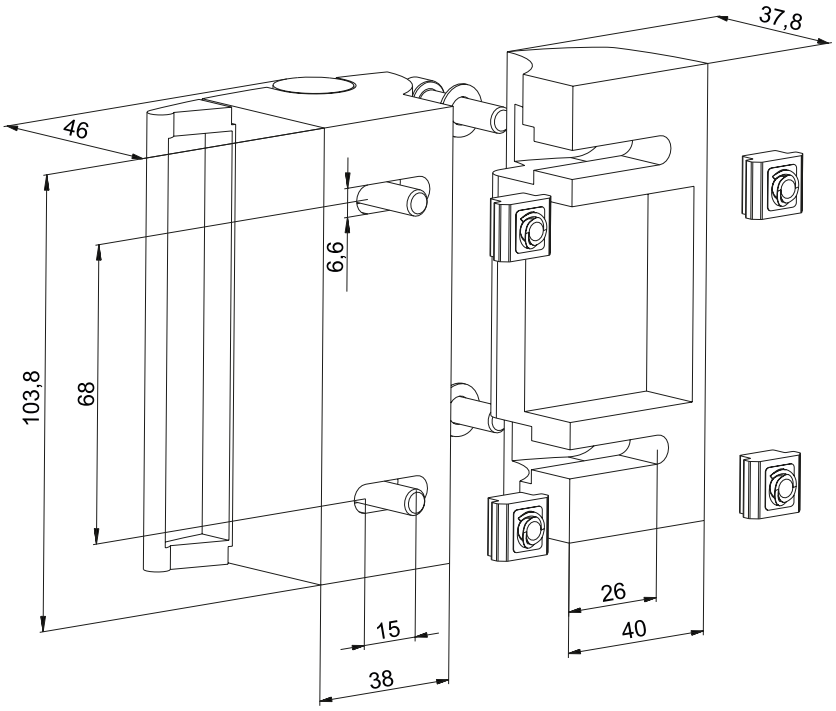

[mm]

Code No.	Slot geometry
401A530	40

Slam Latch Compact





Material: die-cast aluminium
black powder-coated

Includes:
complete with fixing set.

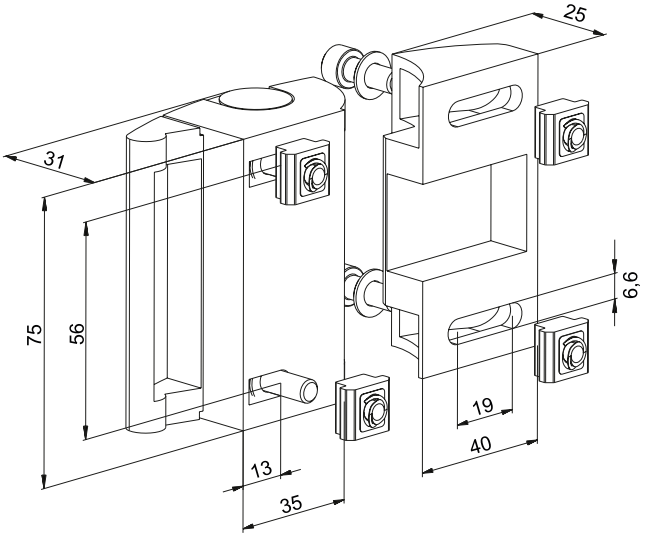

[mm]

Code No.	Slot geometry
401A531	40

Door stopper

Material: Black plastic,
galvanised steel
Complete with fixing set:



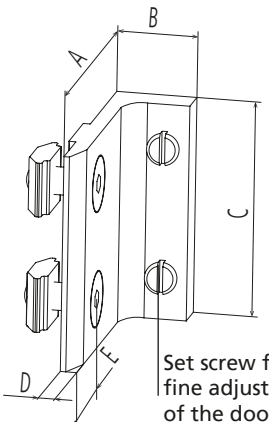

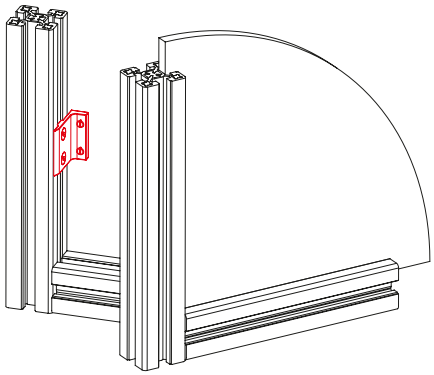

[mm]

Code No.	Slot geometry	A	B	C	D	E
4008650	30	34	14.7	40	3	11
4018650	40	44	14.7	40	3	16

Handle

Material size 150 and 197:
PP plastic

Material size 152:
Black anodised aluminium
Complete with fixing set:
Aluminium



Size 150 and 197



Size 152

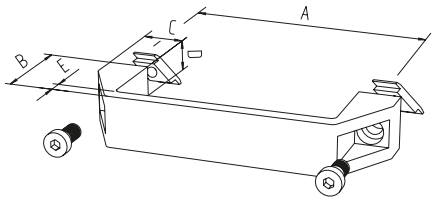

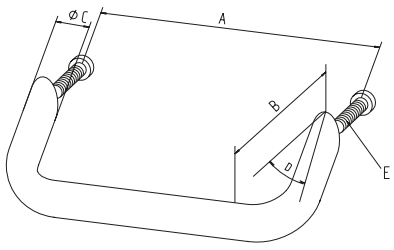

[mm]

Code No.	Size	Slot geometry	A	B	C	D	E
4005596	152	Drill	128	50	20	35°	M6x30
4015598	152	Drill	128	50	20	35°	M6x40
4008596	150	30	132	44	21	27	7
4015596	150	40	132	44	21	27	7
4015597	197	40	179	50	22	28	7

Fittings

Handle profile

- The elegant handle profile is supplied as bar material and can be cut to length as required.
  The customer must drill the fixing holes.

Material: Aluminium



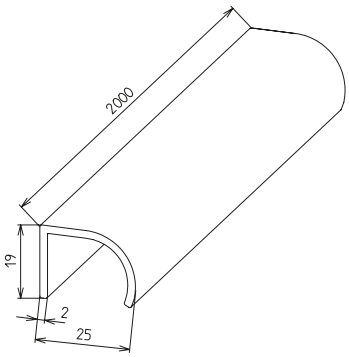

Code No.	Type
4015595	Handle profile, 2000 mm bar

Handle/Handrail

Retrospective fixation with slot stone R
Anodised aluminium tube grip surface
Cut to size or bar

Material:
Black plastic mounting brackets, galvanised fastenings. Aluminium tube



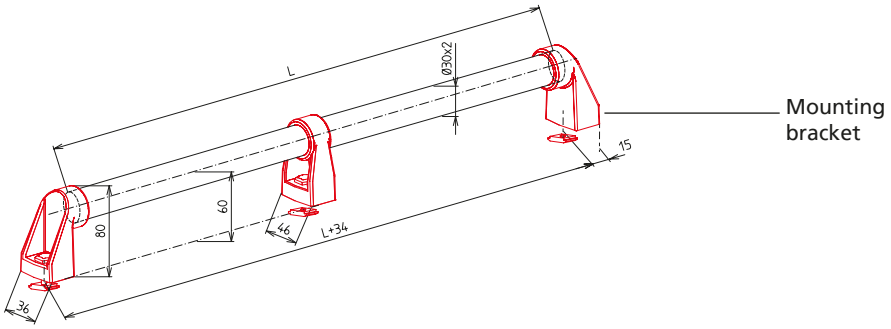

Central mounting bracket recommended as of L>1000 mm

Code No.	Slot geometry	Type
4018501	40	2x mounting brackets, L<1000 mm
4018502	40	2x mounting brackets, 1x central mounting bracket, L>1000 mm

Code No.	Type
823020 2 0500	Aluminium tube, Ø30x2 L=500 mm
823020 2 1000	Aluminium tube, Ø30x2 L=1000 mm
823020 2 2000	Aluminium tube, Ø30x2 L=2000 mm
823020 2	Cut to length aluminium tube Ø30x2, Lmax= 6000 mm

Length [mm]

Safety switch AZM 161

- For safely switching off circuits. Suitable for hinged, sliding and lifting doors.



Technical data:
Self-extinguishing fibreglass-reinforced thermoplastic.
Degree of protection: IP67 to IEC 529/EN 60529/DIN VDE 0470-1
Contact type: One-pin, double-breaking, positively driven NC to VDE 001, additional contacts for signal purposes
Pivot radius: R_{min} 900 mm

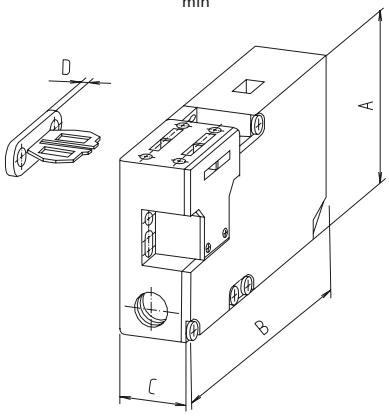

Constant current: 10 A Rated operating current Iu AC 11h 2 A (230 V)
Short circuit resistance:
6 A (slow) as positively driven NC position switch
Contact type: One-pin, double-breaking, positively driven NC to VDE 001, additional contacts for signal purposes
Pivot radius: R_{min} 900 mm
Constant current: 10 A Rated operating current Iu AC 11h 2 A (230 V)
Short circuit resistance:
6 A (slow) as positively driven NC position switch
Positive opening travel/force:
8.8 mm / 10 N
Locking force Fmax: 2000 N
Mech. lifetime:
>10x10^6 switching cycles
Operating temperature:
-25 to +60°C.

Code No.	Type	A	B	C	D
4010650	Switch AZM 161, for sliding door/lifting door/hinged door	90	130	30	5

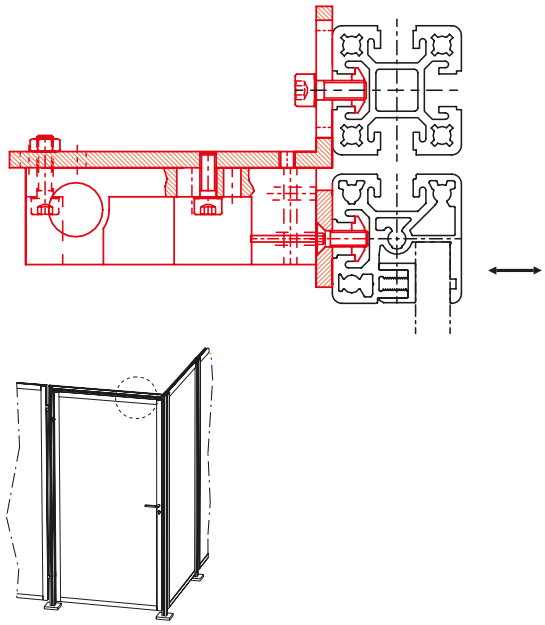

Fig.1: Hinged door
Fixing AZM 161 to the top strut (40-40)

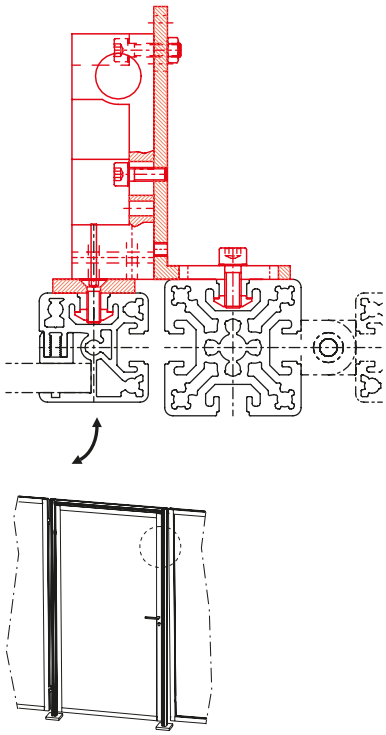

Fig. 2: Hinged door
Fixing AZM 161 to the side strut (40-50)

Fittings

Safety switch AZ 15zvr

- For safely switching off circuits
- Suitable for hinged, flap, sliding and lifting doors

Technical data: Self-extinguishing, fibreglass reinforced thermoplastic

Actuator key:
Stainless spring steel
Degree of protection:
IP67 to IEC 529/EN 60529/DIN VDE 0470-1
Contact material: Fine silver
Contact type: One-pin, double-breaking,
positively driven NC to VDE 001

Pivot radius: R_{min} 450 mm
Rated isolation voltage:
VI 500 V approx. 25-60 Hz.
Constant current: 10 A
Rated operating current Iu AC 11h
4 A (230V), 2.5 A (380 V),
1A (500 W)
Short circuit resistance:
10 A (slow) 16 A (fast).
Contact gap
2 x 3 mm.
Positive opening travel/force:
8 mm / approx. 30 N
Mech. lifetime:
$10x10^6$ switching cycles
Operating temperature:
-30 to +80°C.



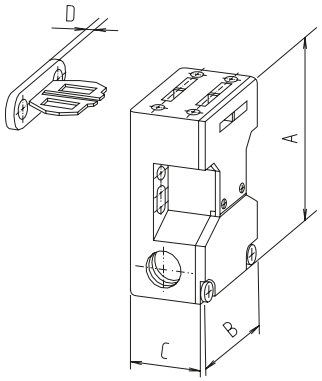

[mm]

Code No.	Type	A	B	C	D
4010610	AZ 15 zvr for sliding door / lifting door	72	52	30	5
4010613	AZ 15 zvr for sliding door	72	52	30	5
4010614	AZ 15 zvr for flap door	72	52	30	5
4015610	Fixing set for sliding door, hinged door		Fig. 1, 2, 3	40 slot geometry	
4015602	Fixing set for lifting door		Fig. 4		

Further fixing sets available on request

Fixing set for sliding and hinged door. Vibration finished aluminium.
See fig. 1-3 on the next page.

Fixing set for lifting door
See fig. 4 on the next page.

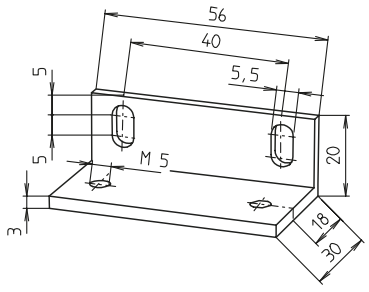

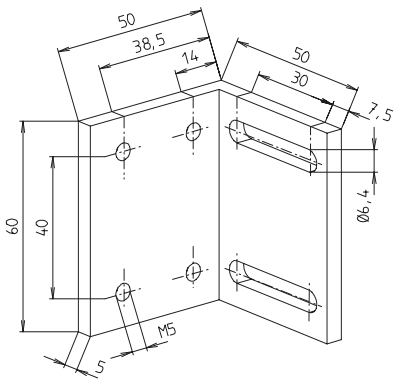

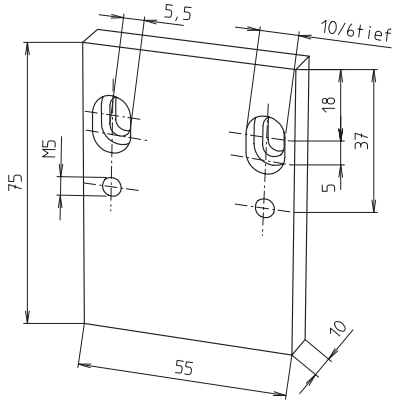

Fig. 1: Hinged door
Fixing AZ 15 zvr to the top strut (40-40)

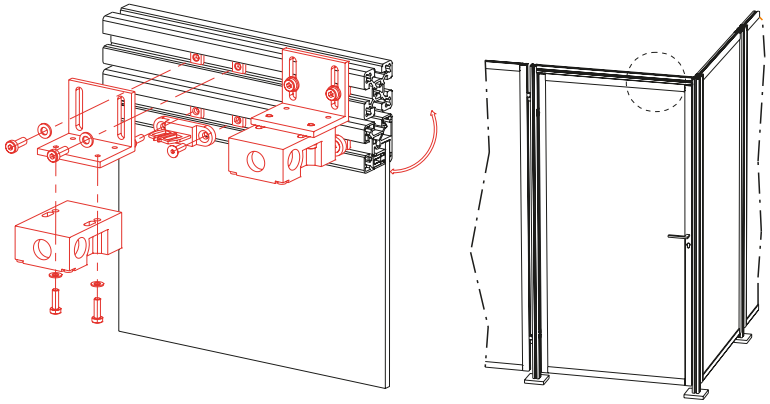

Fig. 2: Hinged door
Fixing AZ 15 zvr to the side strut (40-50)

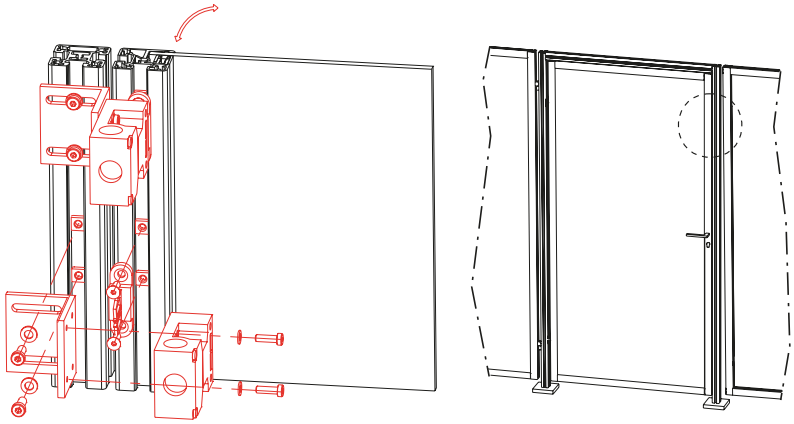

Fig. 3: Sliding door
Fixing AZ 15 zvr to the side strut (50-40)

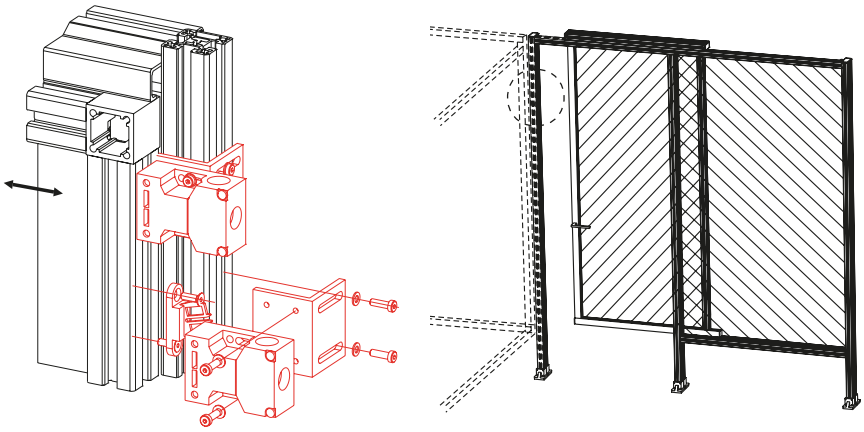

Fig. 4: Lifting door
Fixing AZ 15 zvr to the cross strut (40-40)

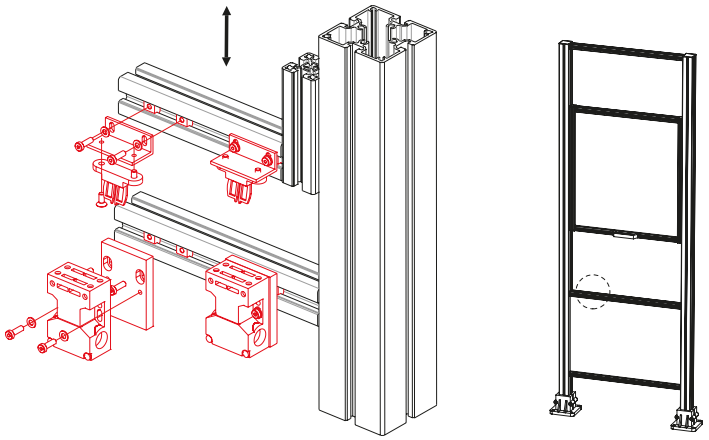

Fittings

Fittings

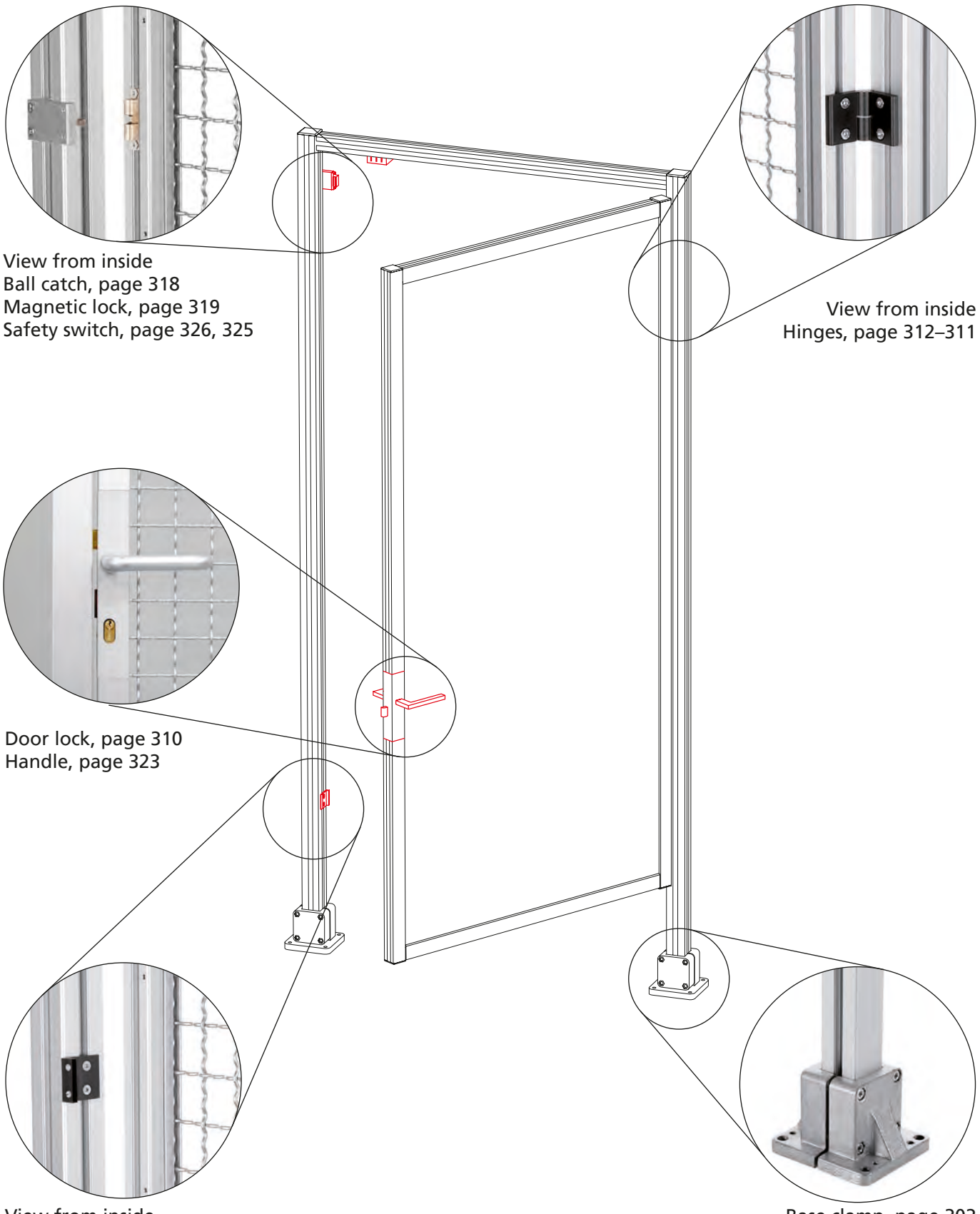

View from inside
Ball catch, page 318
Magnetic lock, page 319
Safety switch, page 326, 325

View from inside
Hinges, page 312–311

Door lock, page 310
Handle, page 323

View from inside
Door stopper, page 300

Base clamp, page 302

Conveying elements and pneumatics

Versions

Conveying elements



Conveyor rollers



Roller carriage



Conveyor drums



Sliding piece

Pneumatics



Pneumatic connection



Pneumatic connecting plate

Table of contents

Conveying elements

Conveyor rollers ..... p. 332

Conveyor drums ..... p. 332

Sliding piece ..... p. 333

Roller carriage ..... p. 334

Pneumatics

Pneumatic connection ..... p. 335

Pneumatic connecting plate ..... p. 335

Conveying elements

Conveyor rollers

- Version with or without flange
- Fixing in the profile slots
- For assembling transport vehicles or conveyor belts.

Material:
Plastic with ball bearing.

Scope of delivery:
Complete with fixing set.



Type O. 38

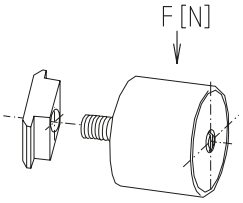

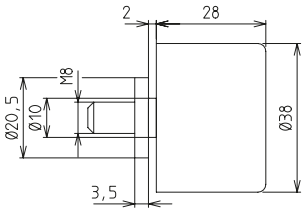



Type M. 38

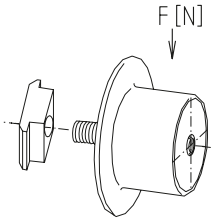

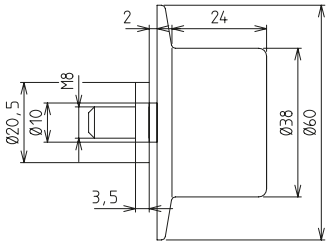

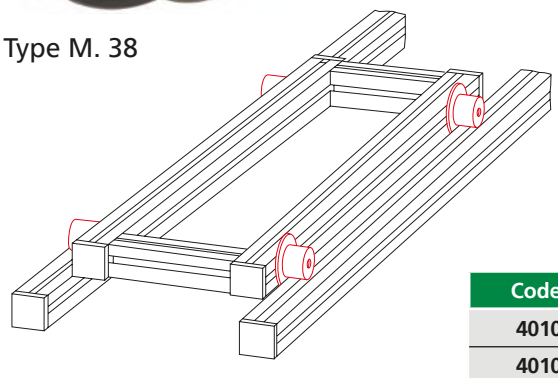

Code No.	Type	Slot geometry	F [N]
4010640	O. 38	40	100
4010641	M. 38	40	100

Conveyor drums

- Standard length 500 mm. Other lengths available on request.

Material: Plastic with plastic ball bearings.

Scope of delivery:
Complete with fixing set.



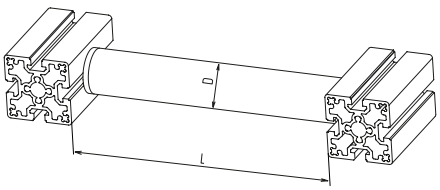

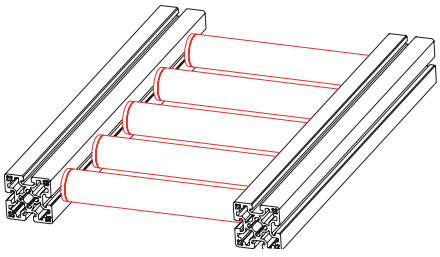

[mm]

Code No.	Type	D	L	Slot geometry	F [N] in relation to 500 mm
4018641	40	40	500	40	100
4018640	50	50	500	40	150

Sliding piece

- For easy, low-wear moving of parts in a profile frame (sliding doors, lifting doors).
- A "centred" and an "off-centred" version are available. The sliding piece is available ready to install including set screws and as bars.

Material:
Black plastic

Scope of delivery:
See table/version





Fig. 1

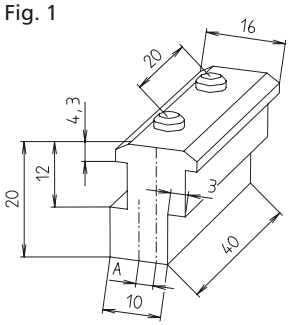

Fig. 2

Set screw

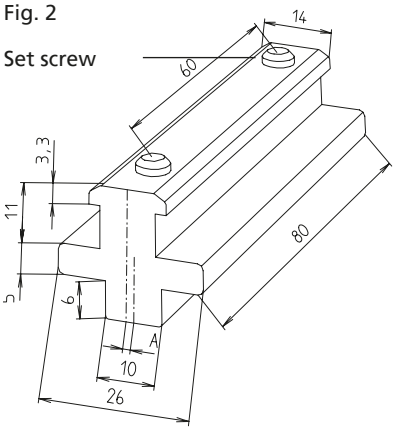

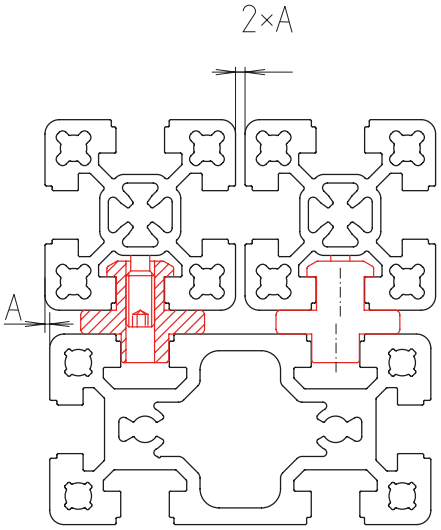

[mm]

Code No.	Type	Version	Fig.	A
4018644	Centred sliding piece	Complete, 40 slot geometry	2	0
4018645	Centred sliding piece	2000 mm bar	2	0
4018646	Off-centred 1 mm sliding piece	Complete, 40 slot geometry	1	1
4018647	Off-centred 1 mm sliding piece profile	2000 mm bar	1	1
4018648	Off-centred 3 mm sliding piece	Complete, 40 slot geometry	1	3
4019236	Set screw M6x18 DIN 913	Corrosion-resistant		

Conveying elements

Roller carriage

- The roller carriages are fitted for sliding door profile sizes 30 and 40 (see chapter "Functional profiles" page 196 + 201) However, they can also be used as individual parts in other constructions.

Material:
Aluminium, vibration finished with slide bushing, Plastic rollers, black

The scope of delivery includes the complete roller carriage, fixing screw, slot stone -F- and a lock nut. Galvanised steel fixation



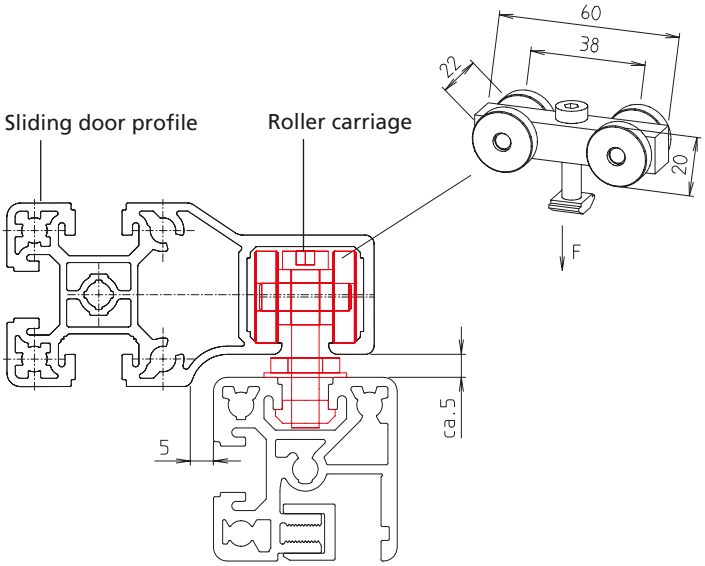

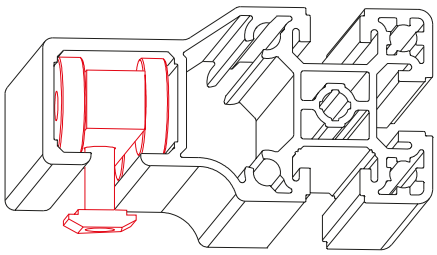

Code No.	Type	Version	F
4170601	30	Complete roller carriage	150 N
4180601	40	Complete roller carriage	150 N

RK ROSE+KRIEGER

Pneumatic connection



Assembly: Mark the desired position with the aid of the template (see page 482) and drill a hole with a 4 mm drill (1). Place the O ring (2) on the bore hole (6) and then push the slot stone (3) in the slot from the side, directly onto the bore hole. Then hand-tighten the screw in the slot stone (3) and lock it with the nut (5) and washer (4).

Material:
Galvanised steel slot stone, brass screw connection.
Connecting option in the slot of coupling sockets, plugs or screw connections.

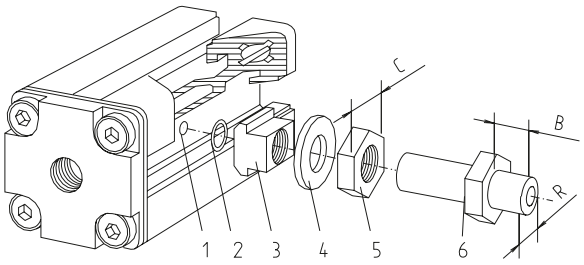

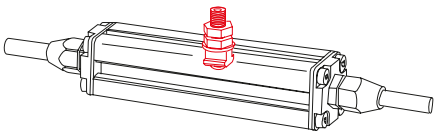

Code No.	Connection	R	B	C
4010415	R1/8"	R1/8"	12	17
4010416	With hose coupling - automatic stop			

Pneumatic connecting plate

- Connection to the front profile surfaces, for compressed air supply or consumer systems.

Material:
Die-cast aluminium

Scope of delivery:
Complete with seal and screws.
Fixing: Galvanised steel



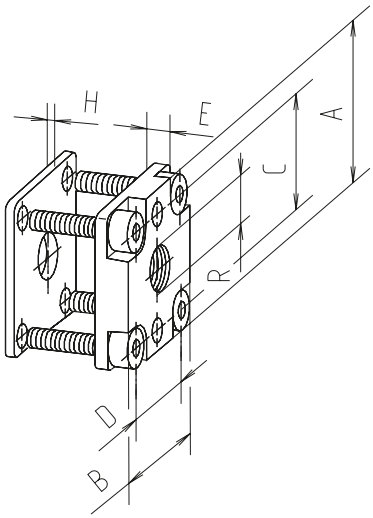



Code No.	Type	Connection	A	B	C	D	E	R	H
4044411	80x80, F-80x80-L	R1/4"	80	80	68	68	8	R1/4"	2
4044412	80x80, F-80x80-L	R1/2"	80	80	68	68	8	R1/2"	2

Cable channel system

Versions



Profiles



Spring strips



Channel assembly clip



Cover plate



End cover
for cable outlet



Grommet
for cable outlet



Membrane grommet
for cable outlet



Cable tie base



Separating strip



Assembly strip



Edge protection



Equipotential bonding



Self tapping screw

Table of contents

Cable channel system

Functionality/Assembly ..... p. 338
Profiles ..... p. 339
Spring strips ..... p. 340
Channel assembly clip ..... p. 340
Cover plate ..... p. 340
End cover for cable outlet ..... p. 340
Grommet for cable outlet..... p. 340
Membrane grommet for cable outlet..... p. 340
Separating strip ..... p. 341
Assembly strip..... p. 341
Edge protection..... p. 341
Equipotential bonding..... p. 341
Self tapping screws ..... p. 341

Cable channel system

Channel functionality

- Aluminium cable channel in sizes 40x40, 40x80 and 80x40
- Smooth and scratch-resistant easy to clean anodised surface

Easy to open / excellent accessibility

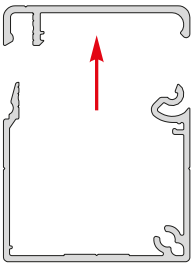

Lift cover to open

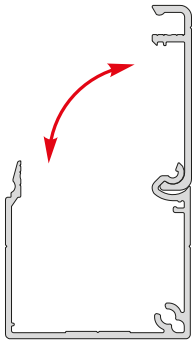

or pivot open

Arrangement in channel with optional separating strips

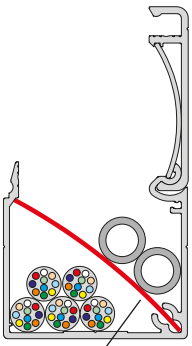

Separating strip

Assembling the channel

Easy assembly (without machining) with BLOCAN® profiles

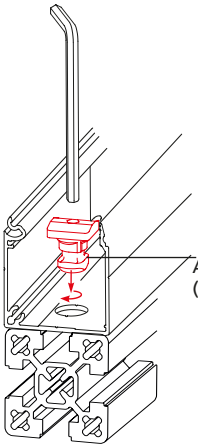

As required Ø12 pre-punched (approx. every 200 mm)

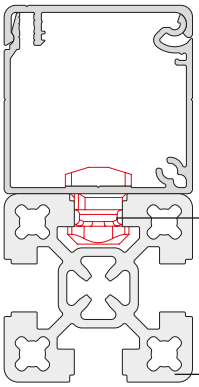

Assembly clip

BLOCAN profile

Equipotential bonding

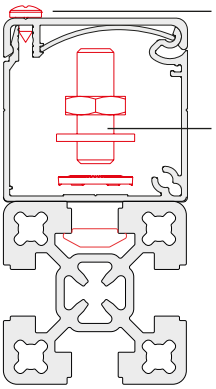

Creation of an electrically conducting connection using a self-tapping screw is possible.

Equipotential bonding kit available as an accessory



Cable arrangement

Insertable spring strips hold the cover in position

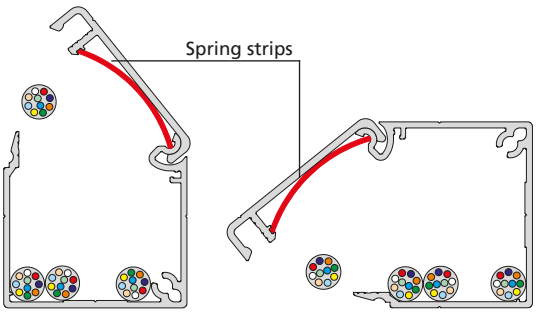

Spring strips

Assembly strips facilitate overhead assembly

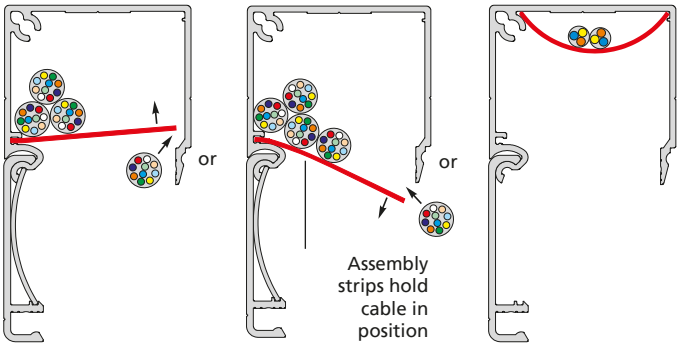

or

or

Assembly strips hold cable in position

Cable channel profiles

Profil KK-40x20

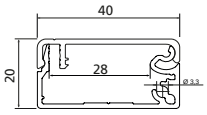

Code No.	Profile	Type	Weight
4F55A01	KK-40x20, 6 m bar	With fixing holes	0,609 kg/m
4F55A00	KK-40x20, cut to size		
4F55001	KK-40x20, 6 m bar	Without fixing holes	0,611 kg/m
4F55000	KK-40x20, cut to size		

Profile KK-40x40

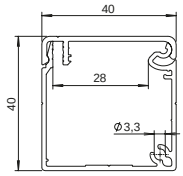

Code No.	Profile	Type	Weight
4E15A01	KK-40x40, 6 m bar	With fixing holes	0.745 kg/m
4E15A00	KK-40x40, cut to size		
4E15001	KK-40x40, 6 m bar	Without fixing holes	0.747 kg/m
4E15000	KK-40x40 cut to size		

Profile KK-40x80

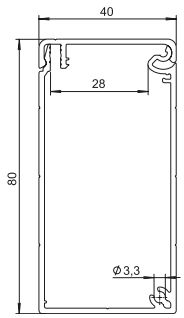

Code No.	Profile	Type	Weight
4E35A01	KK-40x80, 6 m bar	With fixing holes	1.152 kg/m
4E35A00	KK-40x80, cut to size		
4E35001	KK-40x80, 6 m bar	Without fixing holes	1.155 kg/m
4E35000	KK-40x80 cut to size		

Profile KK-80x40

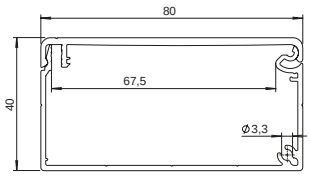

Code No.	Profile	Type	Weight
4E25A01	KK-80x40, 6 m bar	With fixing holes	1.290 kg/m
4E25A00	KK-80x40, cut to size		
4E25001	KK-80x40, 6 m bar	Without fixing holes	1.292 kg/m
4E25000	KK-80x40 cut to size		

Profile KK-80x80

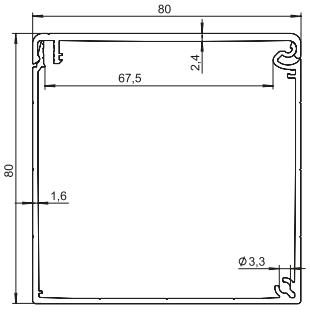

Code No.	Profile	Type	Weight
4F15A01	KK-80x80, 6 m bar	With fixing holes	1.690 kg/m
4F15A00	KK-80x80, cut to size		
4F15001	KK-80x80, 6 m bar	Without fixing holes	1.693 kg/m
4F15000	KK-80x80 cut to size		

Cable channel system

Order instruction:

- Purchase only in lot sizes and a multiple of that see product table below



Spring strips hold the cover open in any position



Quick and easy assembly with a fixing clip

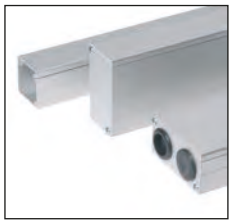

Cover plates and outlets as required

Spring strips for cover



Code No.	Type	lot sizes	Material
4E185041	KK 40x40 KK 40x80	10, 20, 30... pcs	Plastic
4E285011	KK 80x40 KK 80x80	10, 20, 30... pcs	Plastic

Cable assembly clip



Code No.	Type	lot sizes	Material
4E185031	all	10, 20, 30... pcs	Plastic

Cover plate



Code No.	Type	lot sizes	Material
4F555011	KK 40x20	6, 12, 18... pcs	Aluminium
4E155011	KK 40x40	6, 12, 18... pcs	
4E255011	KK 40x80, KK 80x40	6, 12, 18... pcs	
4F155011	KK 80x80	6, 12, 18... pcs	

End cover for cable outlet



Code No.	Type	lot sizes	Material
4E155021	KK 40x40	6, 12, 18... pcs	Aluminium
4E255021	KK 40x80, KK 80x40	6, 12, 18... pcs	
4F155021	KK 80x80	6, 12, 18... pcs	

Grommet for cable outlet



Code No.	Type	lot sizes	Material
4E185051	Outlet Ø 22mm	6, 12, 18... pcs	Z-PVC

Membrane grommet for cable outlet



Code No.	Type	lot sizes	Material
4E185021	40x40 , 40x80, 80x40, 80x80	6, 12, 18... pcs	Plastic



Leads can be separated with press-fit separating strips...

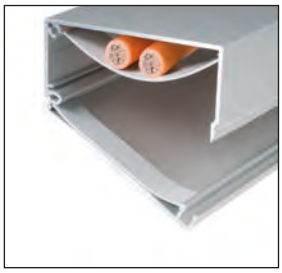

...or make overhead work easier.



Edge protection for inlets or outlets

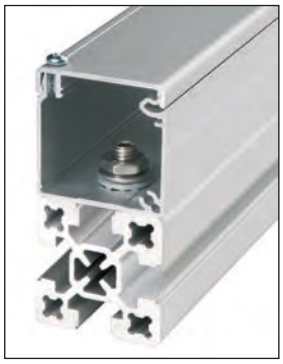

Standard components make equipotential bonding easy

Cable tie base *



Code No.	Type	lot sizes	Material
4F185021	all	10, 20, 30... pcs	Plastic

* May be used with channel assembly clip.

Separating strip



Code No.	Type	lot sizes	Material
4E185061	KK 40x40	10, 20, 30... pcs	Plastic
4E285021	KK 40x80, KK 80x40	10, 20, 30... pcs	
4F185011	KK 80x80	10, 20, 30... pcs	

Assembly strip



Code No.	Type	lot sizes	Material
4E185071	KK 40x40, KK 40x80	10, 20, 30... pcs	Plastic
4E285031	KK 80x40	10, 20, 30... pcs	

Edge protection



Code No.	Type	Material
4E18501	1 unit per 1 m	Plastic

Equipotential bonding



Code No.	Type	lot sizes	Material
4E16502	screw, slot stone, washers	–	Aluminium
4E165031	contact washer	100, 200, 300... pcs	

Self tapping screw



Code No.	Type	lot sizes	Material
4E165011	ISO 7049 St. 3.5 x 9.5, Form f	10, 20, 30... pcs	Aluminium

Accessories M-BLOCAN®

Versions



Flange bracket
M-BLOCAN®



Flange bracket adaptor



Corner joint R / GG



Corner joint
for clamping profiles



Profile / Angle brackets



Mitre joint -transversal-



Slot stone -B- / PLM



Screws



Profile hinge



Handle



Butt hinge



Magnetic lock



Cover profile



Vario-Quick
holding block S

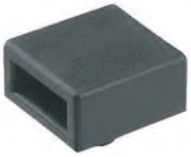

Vario-Quick
holding block K



Surface elements

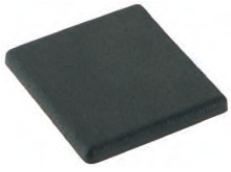

Caps



Foot

Table of contents

Accessories

M-BLOCAN®

Flange bracket M-BLOCAN® p.345

Flange bracket adaptor p.345

Corner joint R / GG p.346

Corner joint for clamping profiles p.348

Profile / Angle brackets..... p.350

Mitre joint -transverse- S.352

Slot stone -B- / PLM p.353

Screws p.353

Profile hinge p.354

Handle..... p.354

Butt hinge..... p.355

Magnetic lock p.355

Cover profile..... p.356

Vario-Quick holding block S p.357

Vario-Quick holding block K..... p.357

Surface elements..... p.358

Caps..... p.359

Foot..... p.359

Flange bracket connection M-BLOCAN®

Flange bracket connection M-BLOCAN®

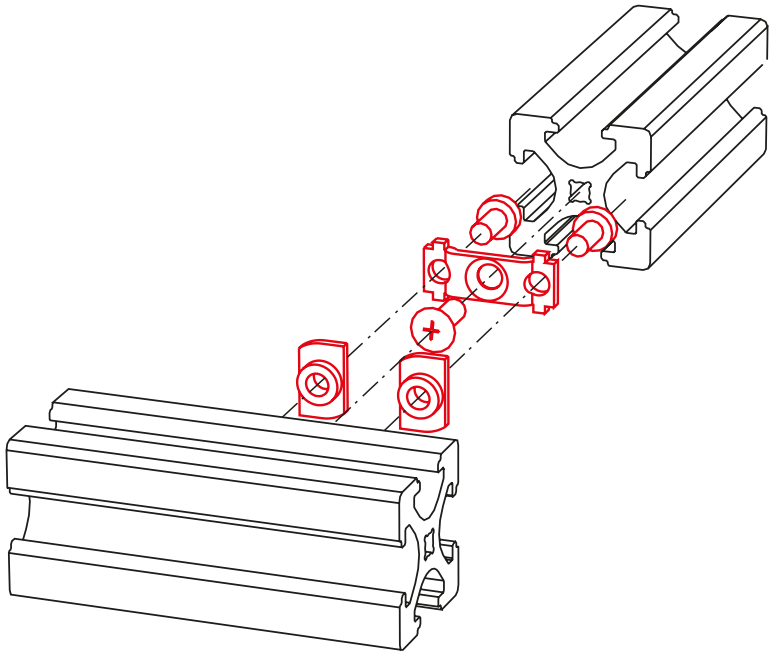

The illustration shows approximately the actual size.

- Connecting BLOCAN® profiles without machining such as drilling, tapping etc. is based on many years of experience. Constant striving for shorter assembly times and therefore lower costs led to the latest innovation in the profile sector: **The bayonet nut connector**
- The redesigned slot stones are already pre-assembled to the flange bracket, but loose. They turn automatically in the correct position when screwed in.
- Screw the flange bracket to the profile end, align the slot stones, attach the other profile and tighten.

  Ready!

- Flange bracket with bayonet catch for a right angle connection of two profiles.

Material: Galvanised steel

Scope of delivery:
Comprises all the parts necessary for the complete assembly of two profiles.

Flange bracket M-BLOCAN®



F-/ F-G 20



F-20x40



F-R 20



F-G / F-GG 20

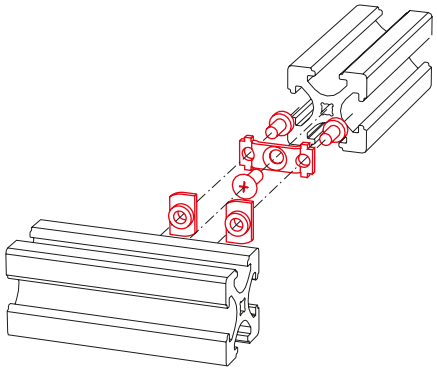

Code No.	Type	lot sizes
E01007AAE	F-20 / F-G 20	10, 20, 30... pcs
E03007AAE	F-20x40	10, 20, 30... pcs
E02007AAE	F-R 20	10, 20, 30... pcs
E07007AAE	F-G 20 / F-GG 20 short	10, 20, 30... pcs

Flange bracket adaptor

- Adaptor strip with slot stones for the connection of M-BLOCAN® profiles with the tried-and-tested BLOCAN® profiles.

Material:
Galvanised steel

Scope of delivery:
Comprises all the parts necessary for the complete assembly of two profiles.
Plastic fixation



F-20

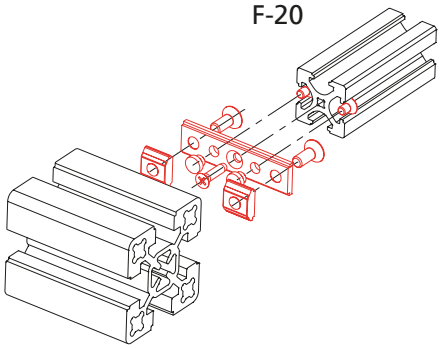

Code No.	Type	Slot geometry
E01009AAE	F-20x20	30
E01012AAE	F-20x20	40
E03009AAE	F-20x40	30
E03012AAE	F-20x40	40
E07009AAE	F-G/GG 20	30
E07012AAE	F-G/GG, F-R 20	40

Accessories M-BLOCAN®

Corner joint R / GG with corner cap

- Connecting element for the rectangular assembly of edge profiles R / GG 20.
- The profiles are connected to each other by means of the corner joint and screws.
- Centring pins facilitate the assembly and adjustment of the profiles. They can be snapped off with a pair of tongs if not required. In order to give this joint an attractive finish, it is covered with a plastic cap.

Material:
Die-cast zinc corner joint,
Plastic cap,
Galvanised fastenings





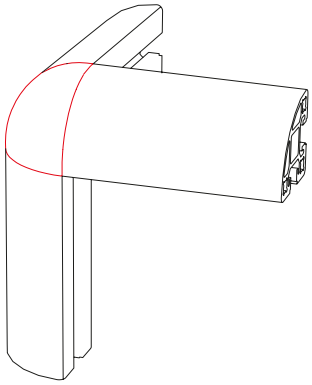

Connection of “R-profiles”

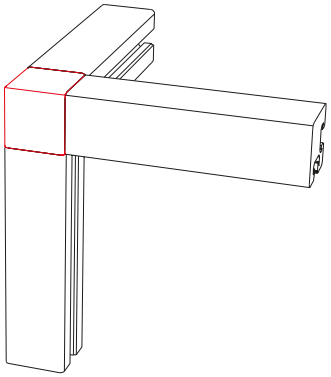

Connection of “GG-profiles”

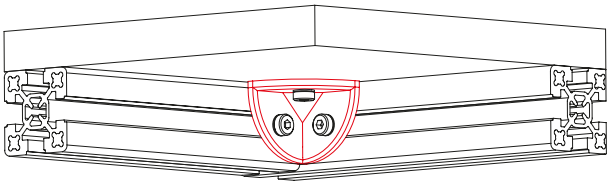

Corner joint as fixation element for the flush assembly of surface elements

Order instruction:

- Purchase only in lot sizes and a multiple of that see product table below



Complete corner joint R20



Complete corner joint GG20

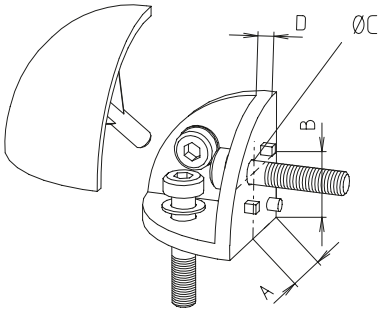

[mm]

Code No.	Type	lot sizes	Profiles	A	B	Ø C	D
E02043AAE	Complete corner joint, black	4, 8, 12... pcs	R 20	10	10	3.4	2.5
E02045AAE	Complete corner joint, black	4, 8, 12... pcs	GG 20	10	10	3.4	2.5
E02042AAE	Corner joint, (without cap and screws)	4, 8, 12... pcs	R, GG 20	10	10	3.4	2.5

Code No.	Type	lot sizes	Profiles	Colour
E02044DAE	Corner cap	10, 20, 30... pcs	R 20	black
E02044KAE				RAL 9006
E02044LAE				RAL 7035
E02044MAE				RAL 1021
E02044NAE				RAL 3020
E02044PAE				RAL 5005
E02046DAE	Corner cap	10, 20, 30... pcs	GG 20	black
E02046KAE				RAL 9006
E02046LAE				RAL 7035
E02046NAE				RAL 3020
E02046PAE				RAL 5005

Black

White
RAL 9006

Grey
RAL 7035

Yellow
RAL 1021

Red
RAL 3020

Blue
RAL 5005

Please note that due to typographical reasons the colours listed above can only be an approximate representation of the corresponding RAL colours.

Accessories M-BLOCAN®

Order instruction:

- Purchase only in lot sizes and a multiple of that see product table below

Corner joint
KL / KLE / KLK / KLA



Version KL



Version KLE



Version KLK



Version KLA

- Connecting element for the rectangular assembly of clamping profiles KL, KLD and KLE

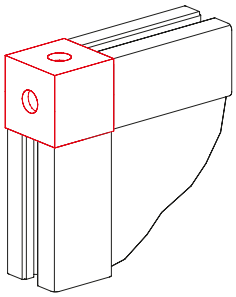

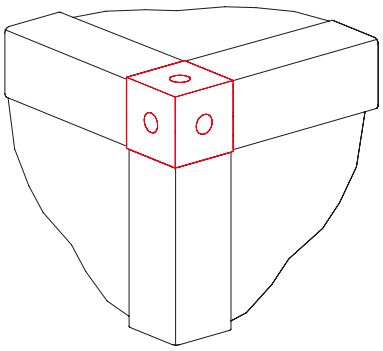

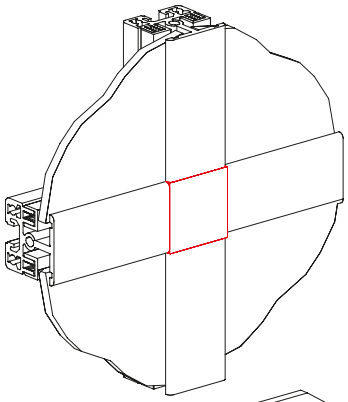

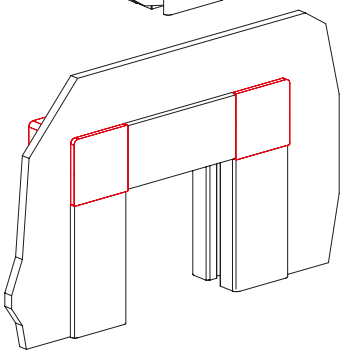

- The fastening screws are inserted directly into the profile which is torsionally secured by means of centring pins
- In the corner joints type KL and KLE, the boreholes for the screws can be tapped with a plastic cap.

Material:
Black powder-coated aluminium

Scope of delivery:
Comprises all the parts necessary for the assembly of two or three profiles

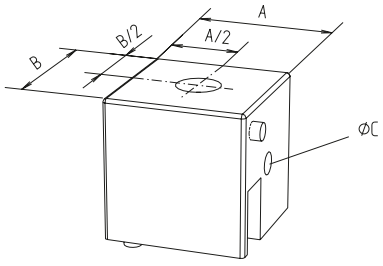

[mm]

Code No.	Type	lot sizes	A	B	C
E04036BHE	KL 20	–	20	20	3.4
E09035BHE	KLE 20	–	20	20	3.4
E00041BHE	KLK 20	–	20	20	3.4
E04059BHE	KLA 20	–	20	20	3.4
Plastic caps (black)					
E00061DAE	KL/KLE 20	100, 200, 300...pcs	–	–	–


diebels
FAULÄNER
Schw
hweppes
Barre Bräu
Deutsche Möbelspedition
Deutsche Möbelspedition

Accessories M-BLOCAN®

Profile angle bracket

Material:
Aluminium, vibration finished

Scope of delivery:
without fixation set



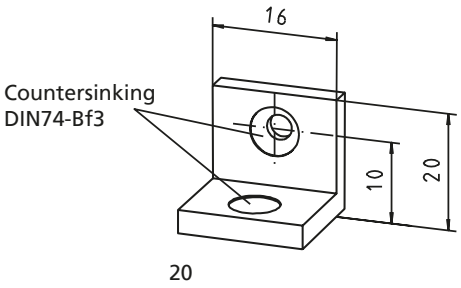

Code No.	Type	Slot geometry
E00005BDE	20	All
E00018AAE	Fixation set 20	20

Angle bracket

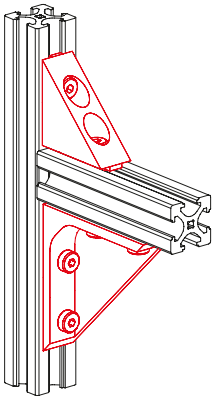

Material:
Die-cast aluminium

Scope of delivery:
without fixation set

35x35-1



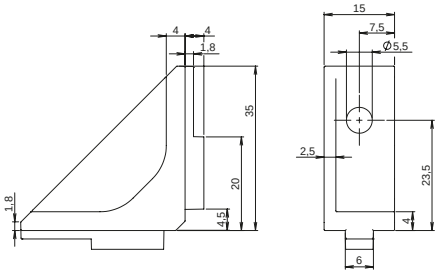

Code No.	Type	Slot geometry
E00062EDE	Angle bracket 35x35-1	20
E00065AAE	Fixation set	20

60x60-1



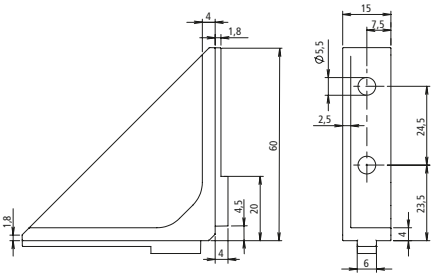

Code No.	Type	Slot geometry
E00063EDE	Angle bracket 60x60-1	20
E00066AAE	Fixation set	20

Accessories M-BLOCAN®

Mitre joint -transverse-

- This assembly set is used to achieve cross connections without drilling.
- The profiles are adjustable and can be later added to existing constructions.
- The parts are self-centring so that no adjustment of the profiles is needed.

Material:
Galvanised steel

Scope of delivery:
Complete with fixation set



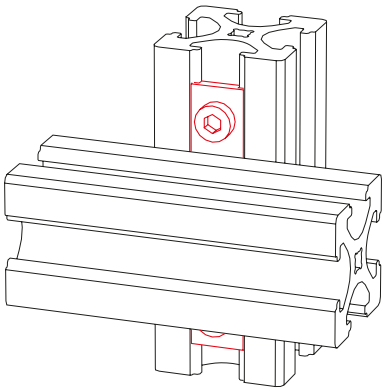

Code No.	Type	Version
E00016AAE	20	with slot stone -B-

Order instruction:

- Purchase only in lot sizes and a multiple of that see product table below

Slot stone -B-



- For the fixation of flange brackets, profile connectors and angle brackets
- The slot stone can be inserted into the slot at any desired position and turns in the correct clamping position when tightening

Material:
Galvanised steel

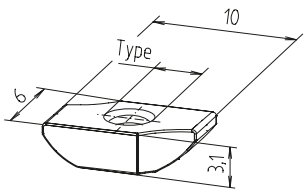

Code No.	Type	lot sizes
E00017CEE	M3	10, 20, 30... pcs
E00058CEE	M4	10, 20, 30... pcs

Slot stone -PLM-



- For the fixation of flange brackets, profile connectors and angle brackets
- The slot stone PLM is inserted into the profile laterally

Material:
Galvanised steel

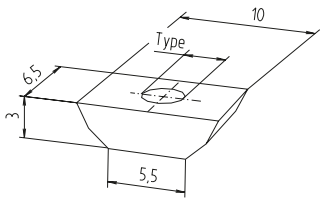

Code No.	Type	lot sizes
E00037CEE	M3	10, 20, 30... pcs
E00038CEE	M4	10, 20, 30... pcs
E00039CEE	M5	10, 20, 30... pcs

Screws

Material:
Galvanised steel



DIN 7516-D



DIN 912

Code No.	Type	lot sizes	Usage
E00029CEE	M3x6 / DIN 912	100, 200, 300... pcs	Slot stone -B-
E00033CEE	M3x12 / DIN 7516-D	100, 200, 300... pcs	Fix. Flange bracket/Profile

Accessories M-BLOCAN®

Profile joint



- Depending on the fixation set, for an end-to-end connection or the fixation to the longitudinal slots.
- Continuously adjustable through 180°, it can be fixed in any desired position by means of a clamping screw

Material:
Black fibre-glass reinforced plastic, Galvanised steel fixation

Scope of delivery:
Complete with fixation set and centring pins

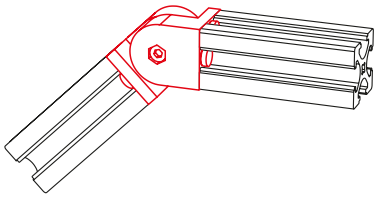

End to end

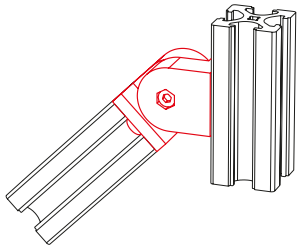

End to slot

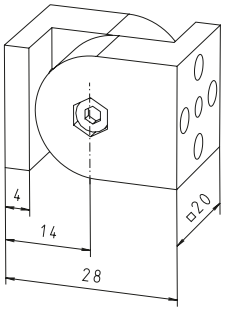

Code No.	Type	Version
E00002AAE	20	End to end
E00003AAE	20	End to slot
E00004AAE	20	Slot to slot

Handle



Material:
Die-cast zinc, black

Scope of delivery:
Complete with fixation set

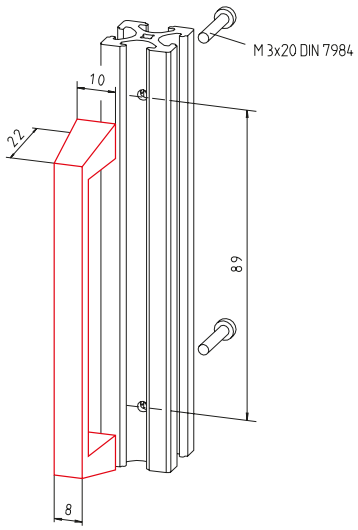

Code No.	Type	for profile
E00022AAE	T-100	all except R20

Butt hinge

- Can be attached to all support profiles with slots and surface elements

Material:
Black plastic

Scope of delivery:
Complete with fixation set



M4x8 DIN7991
Slot stone -B- M4

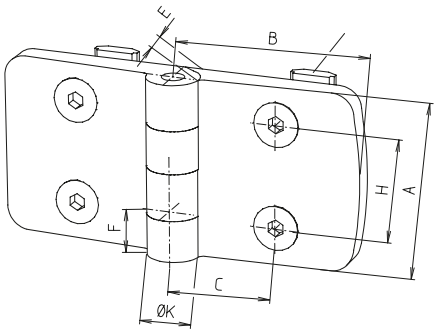

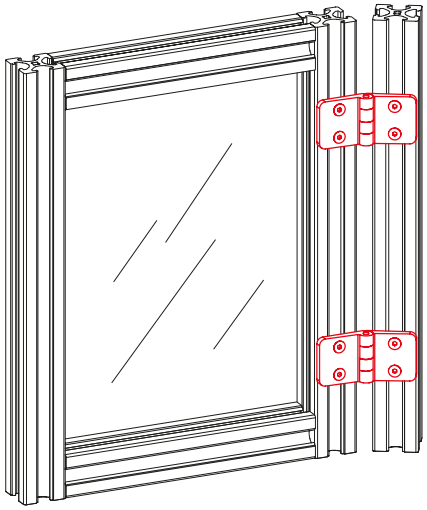

Code No.	Type
E00049DAE	Butt hinge 20 with fixation set

Magnetic lock

Material:
Plastic, galvanised steel parts
Scope of delivery:
Complete with fixation set



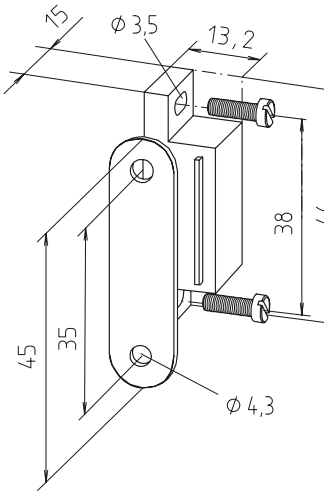

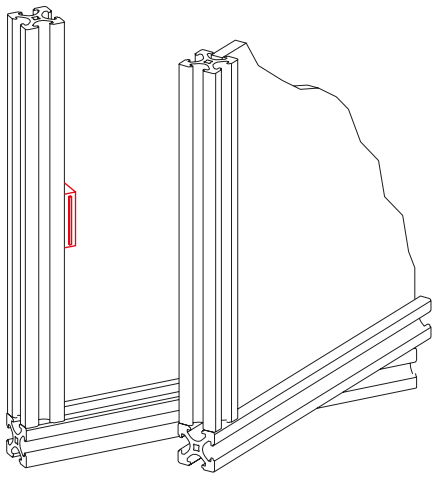

Code No.	Type	for profile
E00023AAE	Surface element with frame	all

Accessories M-BLOCAN®

Cover profile

- For a flush covering of longitudinal slots, protecting against dirt and retaining cables laid in the slots

Material: Plastic

Please note that due to typographical reasons the colours listed above can only be an approximate representation of the corresponding RAL colours.





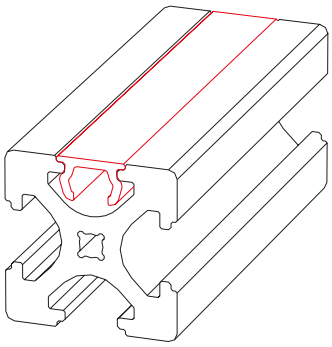

Code No.	Type		
E00024D_C	Bar	coloured	2000mm

Colour of cover profile

L	Grey RAL 7035
K	White RAL 9006
M	Yellow RAL 1021
N	Red RAL 3020
P	Blue RAL 5005
A	Black RAL 9005

Order instruction:

- Purchase only in lot sizes and a multiple of that see product table below

Vario-Quick holding block S

- In contrast to the Vario-Quick holding block R, here the surface element is screwed to the Vario-Quick holding block S.

Material: Black plastic, Galvanised square nut

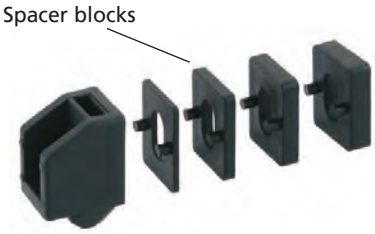

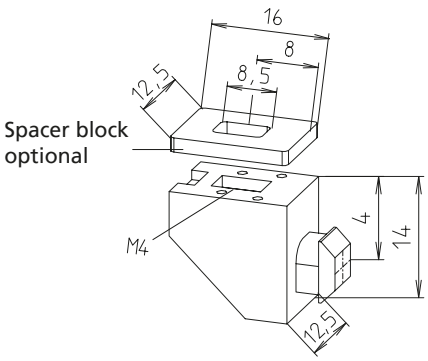

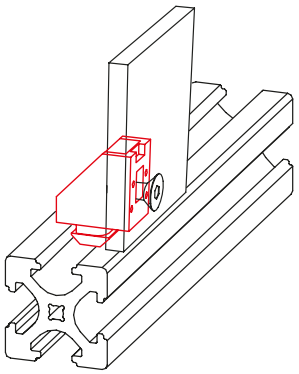

Code No.	Type	lot sizes
E00052DAE	Holding block S, 20 slot geometry	10, 20, 30... pcs
E00053DAE	Spacer block 1	10, 20, 30... pcs
E00054DAE	Spacer block 2	10, 20, 30... pcs
E00055DAE	Spacer block 3	10, 20, 30... pcs
E00056DAE	Spacer block 4	10, 20, 30... pcs

Vario-Quick holding block K (cable bracket)

- The holding block K is used for the fixation of cables and pipes to the profile by means of a cable fastener
- It can be inserted directly into the slot.

Material: Black plastic



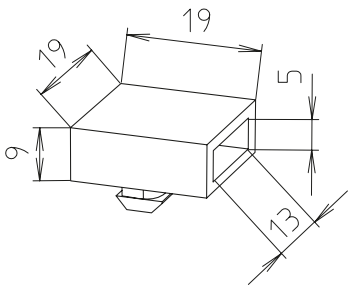

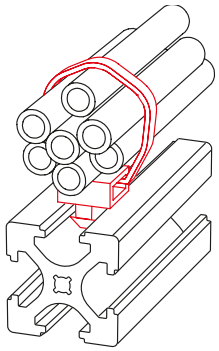

Code No.	Type	lot sizes
E00060DAE	Holding block K, 20 slot geometry	10, 20, 30... pcs

Accessories M-BLOCAN®

Surface element

- For doors, cladding, partitions and table tops.

Cuts according to instructions!

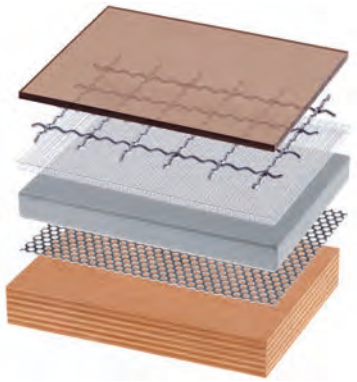

Code No.	Type	Thickness	Version	Max. panel size [m]	Weight [kg/m²]
4018584	Macrolon	2 mm	transparent	3.05 x 2.05	2.40
4018586	Macrolon	4 mm	transparent	3.05 x 2.05	4.80
4018587	Macrolon	4 mm	tinted	3.05 x 2.05	4.80
4018576	Macrolon	6 mm	transparent	3.05 x 2.05	7.20
4018579	Macrolon	6 mm	Brown tinted	3.05 x 2.05	7.20
4018582	Acrylic glass	4 mm	Clear	3.050 x 2.050	4.80
4018595	Acrylic glass	5 mm	Clear	3.050 x 2.050	6.00
4018563	Acrylic glass	5 mm	Blue, transparent	3.050 x 2.030	6.00
4018575	Acrylic glass	6 mm	Clear	3.050 x 2.050	7.20
4018577	Acrylic glass	10 mm	Clear	3.050 x 2.050	13.00
4012576	Trespa	6 mm	brown	3.65 x 1.86	8.40
4012586	Trespa	6 mm	silver grey	3.65 x 1.86	8.40
4018570	Koematex	6 mm	white	3.05 x 1.56	4.20
4015573	Aluminium	2 mm	clear anodised	2.00 x 1.00	5.40
4016577	Wire mesh	2.5 mm	Galvanised steel	1.40 x 2.50	2.40

Order instruction:

- Purchase only in lot sizes and a multiple of that see product table below

Caps

- For end covering of profiles
- Thickness of caps 2 mm.

Material: Plastic
Please note that due to typographical reasons the colours listed above can only be an approximate representation of the corresponding RAL colours.

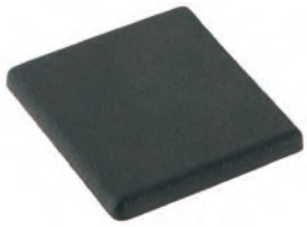

Grey RAL 7035

White RAL 9006

Black RAL 9005

Code No.	Type	lot sizes	Colour
E01025DAE	20	10, 20, 30... pcs	black
E01025KAE			RAL 9006
E01025LAE			RAL 7035
E02025DAE	R 20	10, 20, 30... pcs	black
E02025KAE			RAL 9006
E02025LAE			RAL 7035
E03025DAE	20x40	10, 20, 30... pcs	black
E03025KAE			RAL 9006
E03025LAE			RAL 7035

Foot

- The foot is screwed directly into the screw channel of the M-BLOCAN® profile.

Material: Galvanised steel thread,



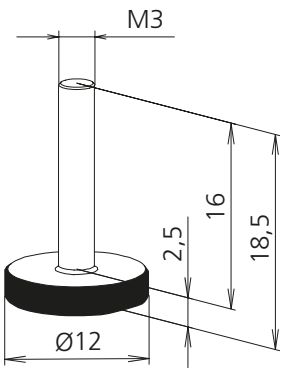

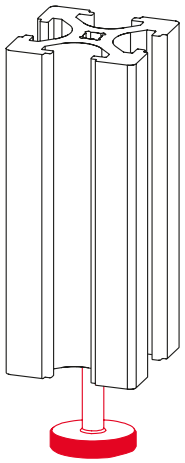

Code No.	Type	lot sizes
E00011CAE	20	10, 20, 30... pcs

Visible profiles of accessories (G-profiles)

Versions



Connecting technology



Slot stones



Angle brackets



Vario-Quick holding block



Plastic foot



Levelling foot



Hinges



Handle profile



Handle



Magnetic lock



Caps



Cover caps

Table of contents

Accessories

Connecting technology ..... p. 362
Slot stones ..... p. 366
Angle brackets ..... p. 367
Vario-Quick holding block S ..... p. 367
Plastic foot ..... p. 368
Levelling foot ..... p. 368
Hinges ..... p. 369
Handle profile ..... p. 374
Handle ..... p. 374
Magnetic lock ..... p. 374
Caps ..... p. 375
Cover caps ..... p. 375

Connecting technology G-profiles

- G-profiles are connected by simple screw connections which are directly screwed into the screw holes of the profiles.

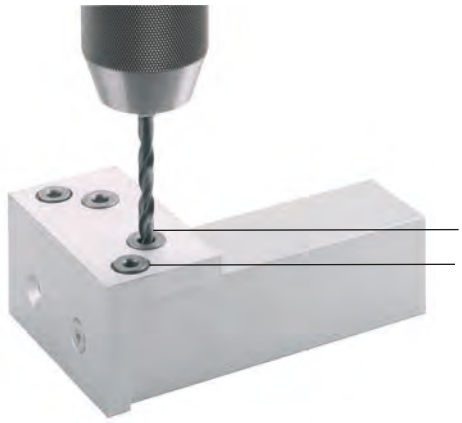

- A through bore hole is drilled into the passing profile of the connection using a template.
- Only one cylinder screw, (40 mm-profile), or two cylinder screws in case of the 40 x 80 mm-profile, is necessary for a rigid connection.
- Optionally, the clamping bolt connection can also be used in a similar way.
- For crossing connections, a special connecting element (see page 364) is being offered.
- Position the drilling template and drill the through bore hole of Ø 6.5 mm. If necessary, in case the profile G-40 is used, drill an additional bore hole for the rotation preventing pin.

Code No.	Type
4006650	Drilling template

Order instruction:

- Purchase only in lot sizes and a multiple of that see product table below

Connection with cylinder screw



- For cylinder screw connections, the top side is drilled out to Ø 11 mm until the bottom of the first slot is reached.

Code No.	Type	lot sizes
4B60504	Cyl. screw M6x80, A2	100, 200, 300... pcs
4B60505	Cyl. screw M6x90, A2	100, 200, 300... pcs

Connection with hidden screw



- For the hidden screw connection, the profile slot is levered out or preferably chiselled out precisely using the RK tool (see page 365). After that, the hidden screw can be slid in from the side.
  Refer to the sketch on page 347.

Code No.	Type	lot sizes
4B605021	Hidden screw M6X30, galvanised	10, 20, 30... pcs

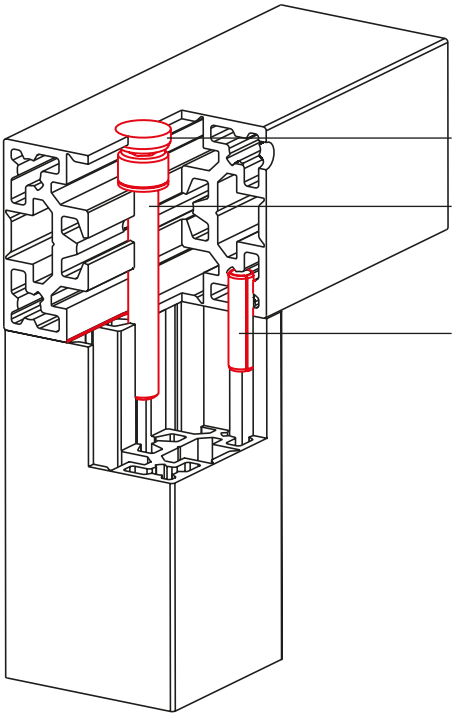
Bore hole Ø 11 mm / Cover cap
Bore hole Ø 6.5 mm
Rotation preventing pin

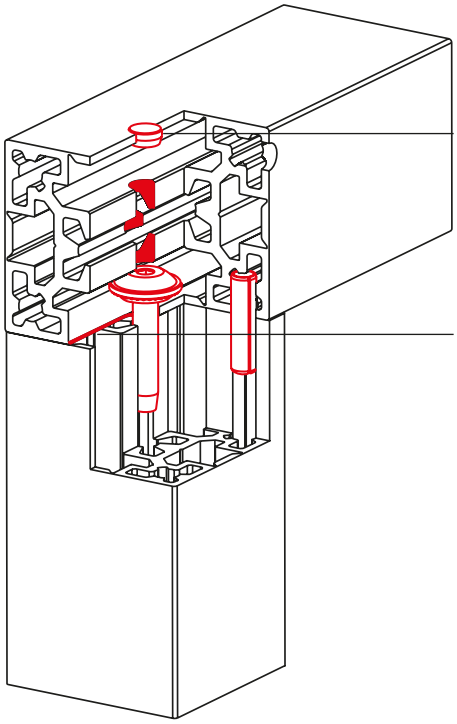
Bore hole Ø 6.5 mm / Cover cap
Opened slot

Connecting technology G-profiles

Versions

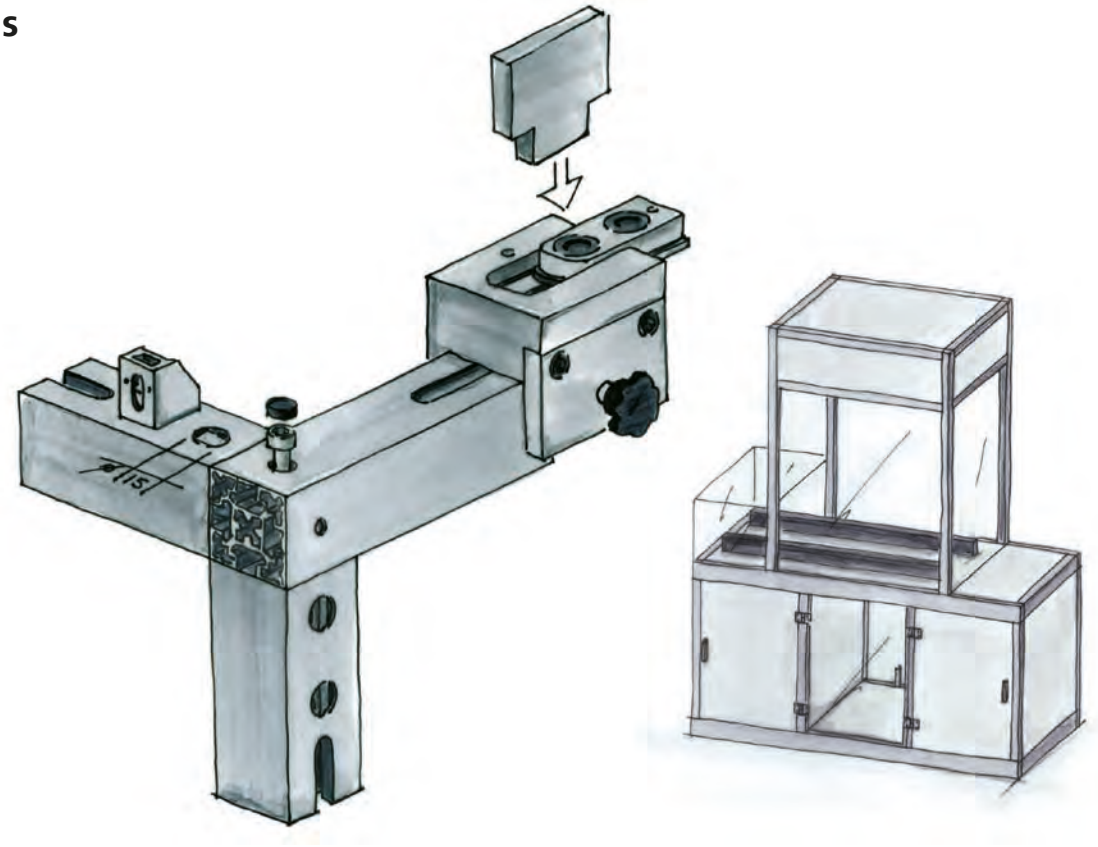

G-connectors



- The G-connector serves for connecting crossing G-profiles to each other (without profile processing). For this, the clamping bolts are inserted into the screw hole and then the profile is clamped by tightening the threaded pins. The profile G-40x40 has a pin that prevents the rotation of the profiles.

Material: Aluminium

Scope of delivery:
The order number involves all parts needed for the complete assembly of a connection.

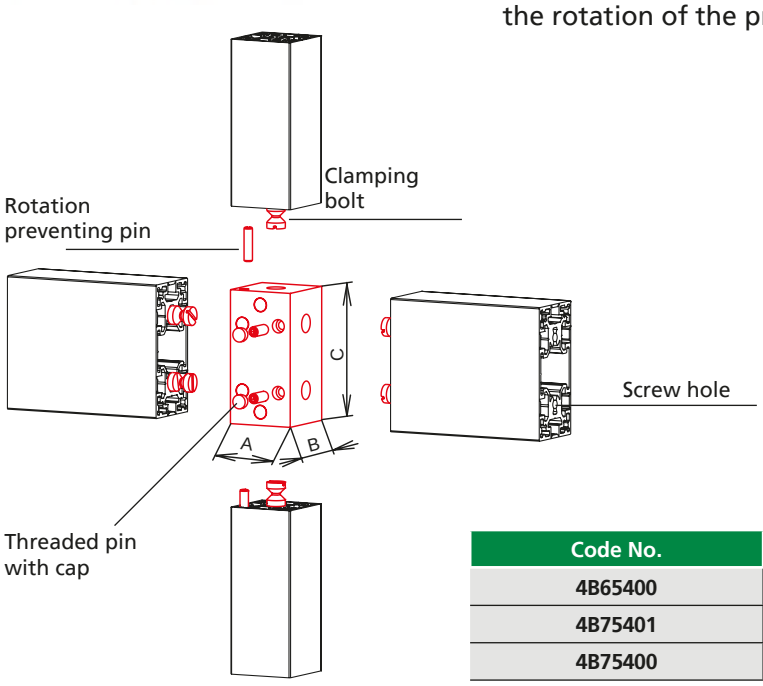

Code No.	Type	A	B	C
4B65400	K 40	40	40	40
4B75401	K 40/80	40	40	80
4B75400	K 80	80	40	80

Opening of the profile slot

- When the G-profiles were designed, special attention was given to the fact that, if necessary, the hidden profile slots shall be accessible. This is possible simply by chiselling out the covered slot. In this way, accessories can be attached without problems or the pro files can be connected to each other.

Drill and chisel tool for G-profiles

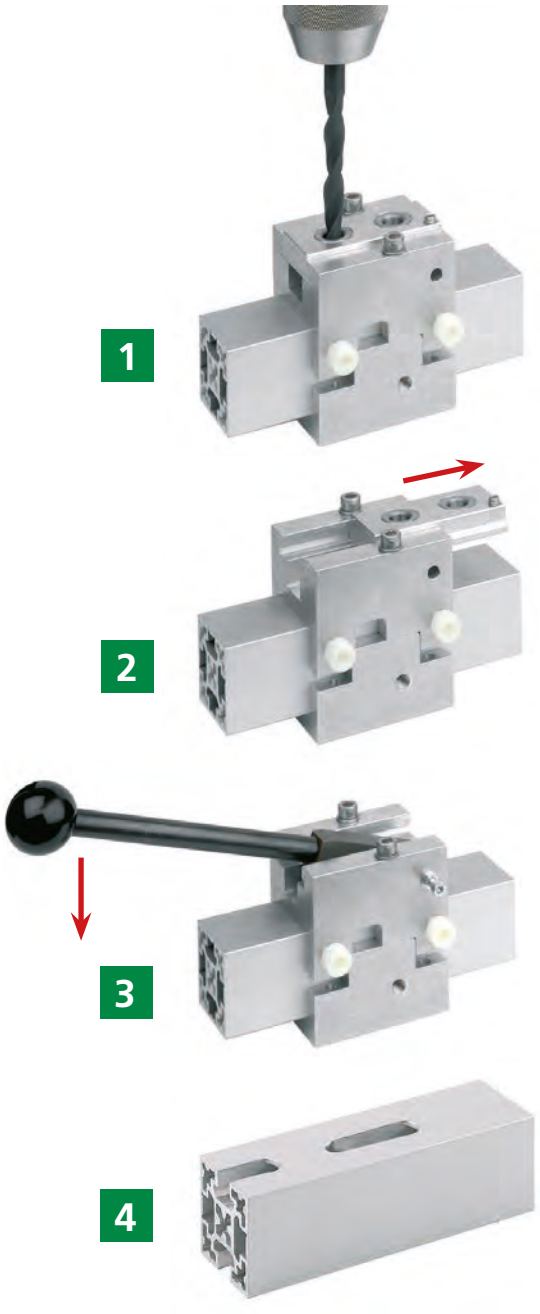

1.) A bore hole is drilled on the end points of the desired position. For attaching accessories, two bushes are installed in a defined distance.

2.) After that, the drilling template is removed.

3+4.) The profile slot is chiselled out using a stamp.

Code No.	Type
4006651	Drill and chisel tool 40
4006653	Drill and chisel tool 80

Accessories G-Profiles



Order instruction:

- Purchase only in lot sizes and a multiple of that see product table below

- The slot stones can also subsequently be placed or inserted into the profile groove.

- The slot stone with spring clip (type-F/K-) can be fixed at any desired position.

Material: Galvanised steel

Slot stones

-F-

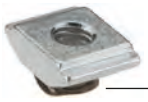

-K-



-R-

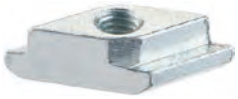

[mm]

Code No.	Type	lot sizes	A	B	C	D	E
4006715	-F- / M4	10, 20, 30... pcs	10	14	4	–	M4
4006713	-F- / M5	10, 20, 30... pcs	10	14	4	–	M5
4016212	-K- / M6	10, 20, 30... pcs	21	14	4	7	M6
4016213	-K- / M8	10, 20, 30... pcs	21	14	4	7	M8
4026221	-R- / M6	10, 20, 30... pcs	15	8	10	–	M6
4026222	-R- / M8	10, 20, 30... pcs	15	9	10	–	M8

Order instruction:

- Purchase only in lot sizes and a multiple of that see product table below

Angle brackets



- A centring nib facilitates the assembly and prevents the bracket from twisting. Should the nibs not be required, they can be snapped off with a pair of tongs.
- Angular tolerance 90°±5'.

Material: Die-cast zinc,
Cover made of plastic RAL9006
Fixation set made of stainless steel

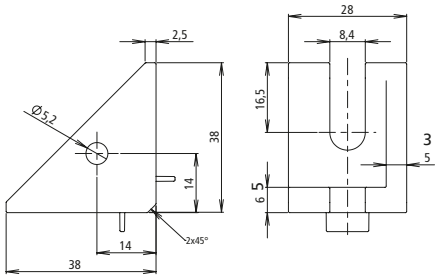

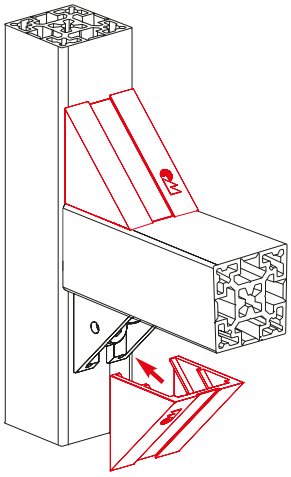

Code No.	Type	lot sizes
4014102	Angle bracket 40	10, 20, 30... pcs
4018104	Plastic cap 40, RAL 9006	10, 20, 30... pcs
4029208	Fixation set M8x16, slot stone -N-	1 slot stone with screw, washer

Vario-Quick holding block S



- Used for the later fixation of surface elements to existing profile constructions.
- The surface element is screwed to the holding block.
- Spacer blocks allow for different distances to the profile edge.

Material: Plastic, RAL 9006
Stainless steel square nut

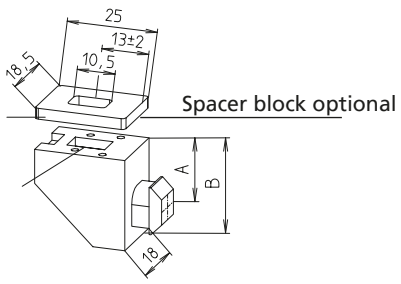

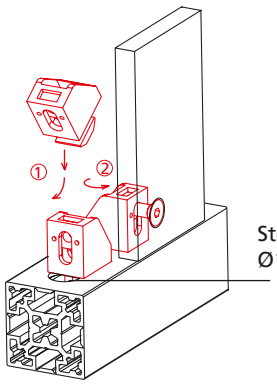

[mm]

Code No.	Type	lot sizes	Version	A	B	M
40181461	Holding block S	10, 20, 30... pcs	40 slot geometry	10	25	M4
40181341	Holding block S	10, 20, 30... pcs	40 slot geometry	10	25	M6
40181371	Spacer block S/L	10, 20, 30... pcs	3 mm	–		
40181381	Spacer block S/L	10, 20, 30... pcs	5 mm	–		
4006648	Stepped drill	–	Ø 8 / 15	–		
4006649	Countersink	–	Ø 15 - 90°	–		

Accessories

Foot –plastic–



- Thanks to its attractive design, the plastic foot can be considered an alternative to the conventional swivel feet.
- The height adjustment does not require tools.

Material: Plastic RAL9006

Scope of delivery:
complete foot with fastenings to be applied to a profile.

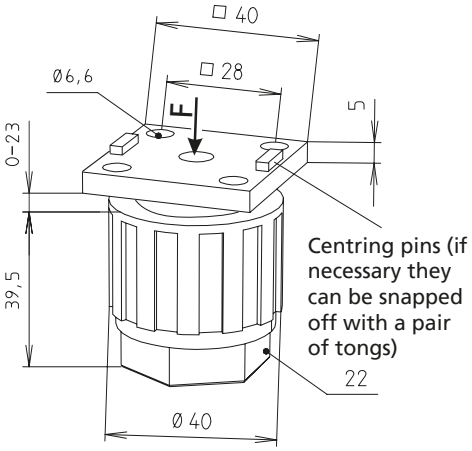

Code No.	Type	F [N]
4018302	40 slot geometry	1200

Levelling foot



- The levelling feet are screwed into the profile using the connecting plate at the face.
- Note: If the profile G 40 x 40 mm is used, the middle screw hole has to be drilled out.
- Material:
  Thread and screws made of stainless steel, hinge disc made of plastic (RAL9006), connecting plates made of aluminium.

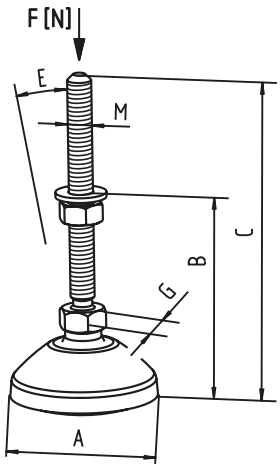

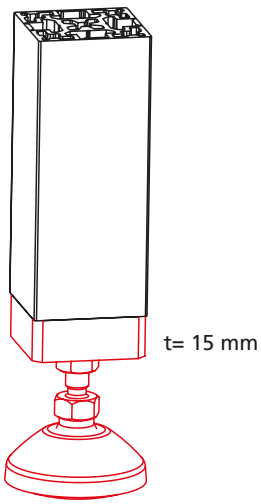

Code No.	Type	A	$B_{min.}$	C	M	E	G	F [N]
4016321	Levelling foot	39	38.5	55	M8	20°	14	9,000
4016322		59	40	100	M10	20°	14	10,000
4016323		79	42	128	M12	20°	14	10,000

Code No.	Type	A	Profile
4014432	Connec-ting plate	M8	G-40x40
4014433		M10	G-40x40
4014434		M12	G-40x40

Code No.	Type	A	Profile
4034434	Connec-ting plate	M8	G-40x80
4034432		M10	G-40x80
4034433		M12	G-40x80

Hinges 2-part

- The hinges can be mounted on all brace profiles and/or surface elements. In case of lift off hinges, flaps and doors can be removed easily.

Material: Aluminium,
Steel parts made of stainless steel
A fixation set (assembly of profiled parts) is supplied with the unit.

Lift off hinges



Butt hinge



Slot stone -L- M6

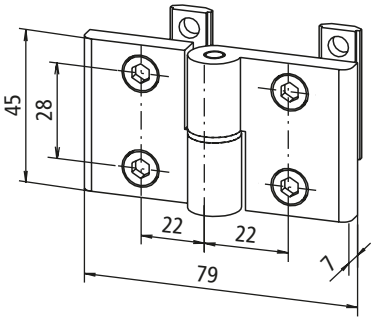

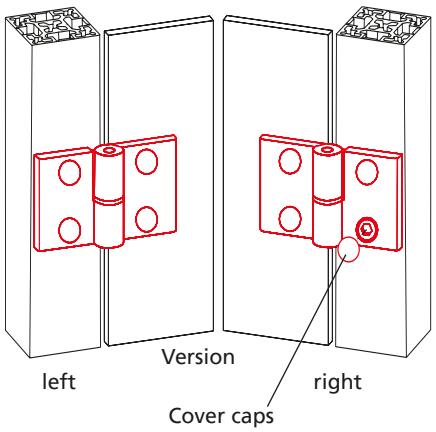

Code No.	Type	Slot geometry
4015510	Lift off hinge -left-	40
4015511	Lift off hinge -right-	40
4015513	Butt hinge	40

Hinges 3-part

Lift off hinge



Butt hinge



Cover cap

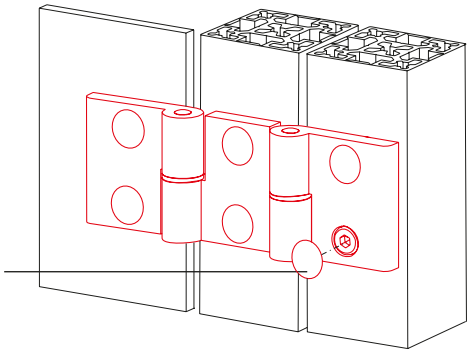

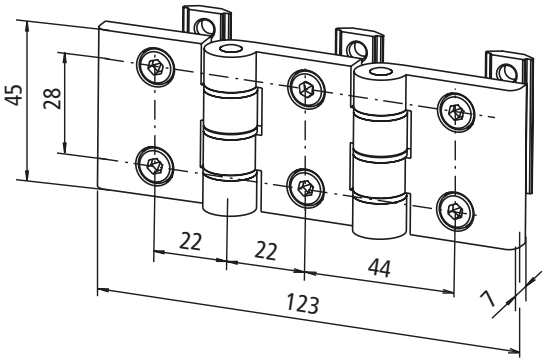

Slot stone -L- M6

Code No.	Type	Slot geometry
4015512	Lift off hinge	40
4015514	Butt hinge	40

Accessories

Piano hinge

- Variable in length
- Taylor-made orderable

Material:
aluminium clear anodized
sliding disks plastic
dowel pins, galvanised steel

Includes:
complete with fixing set

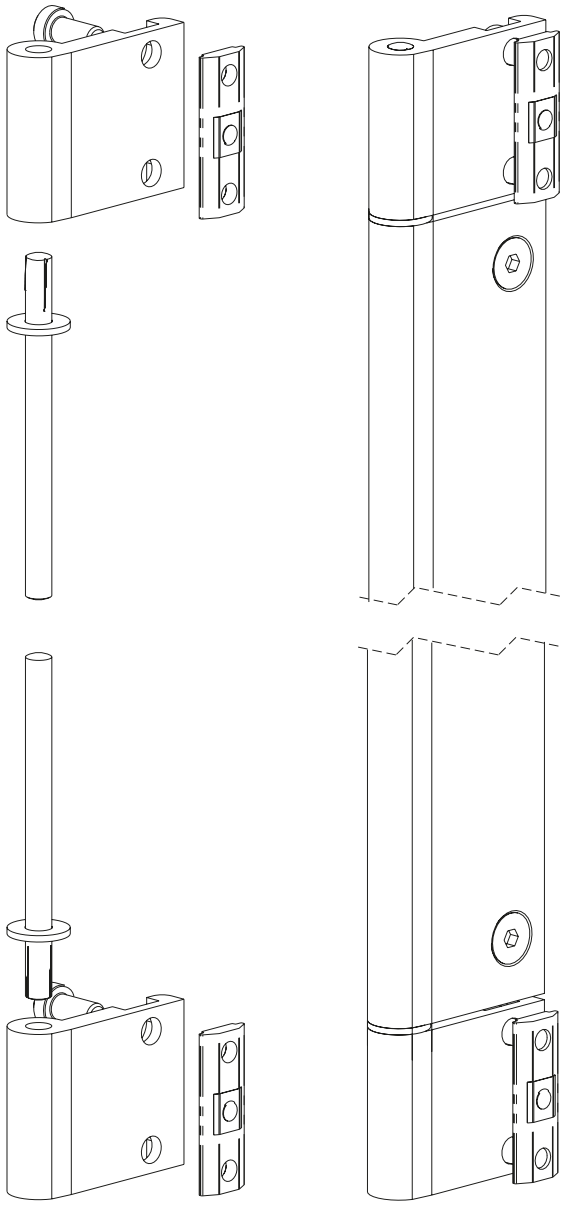

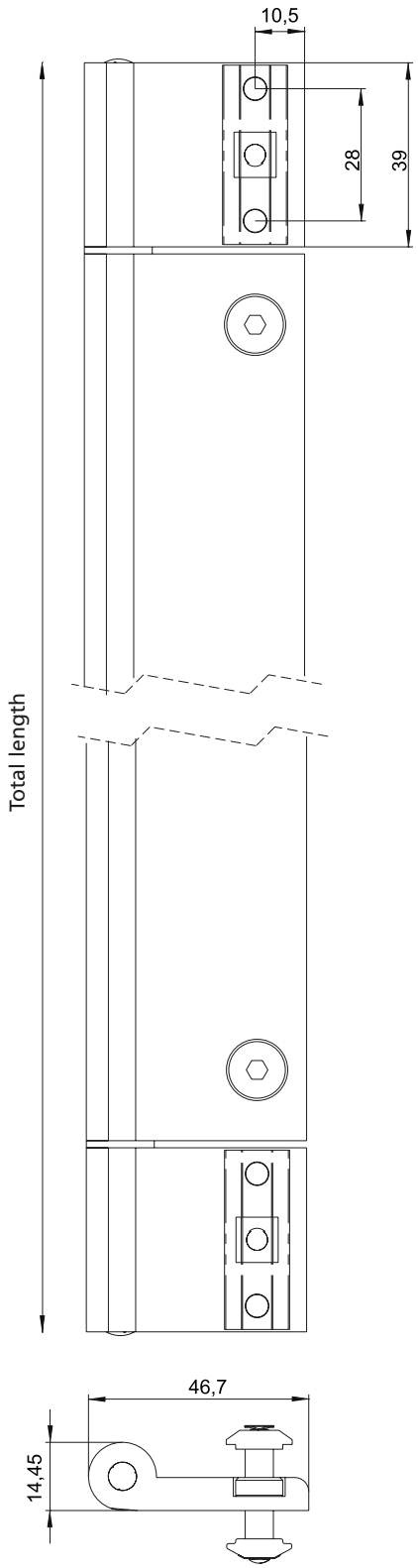

Code No.	Type	length	Max. length	Slot geometry
4010627 _ _ _ _	Band hinge complete	200	2500	40

Total length [mm]



Accessories

Magnetic lock universal

- Suitable from profile size 30 for all assembly versions
- Holding force 10/20 N depends on mounting direction

Material:
polyamide glasfibre reinforced
steel parts zincplated



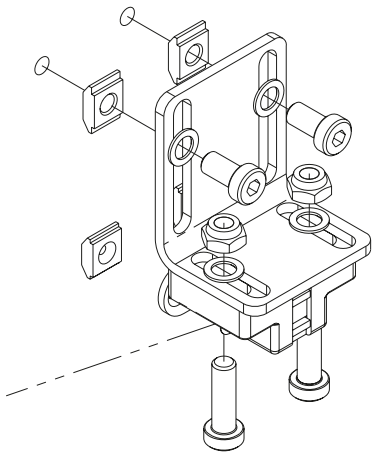

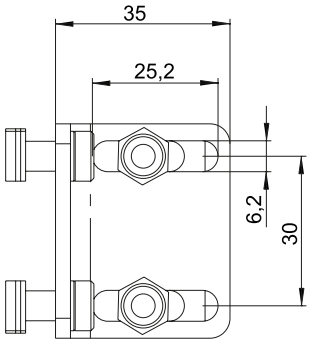

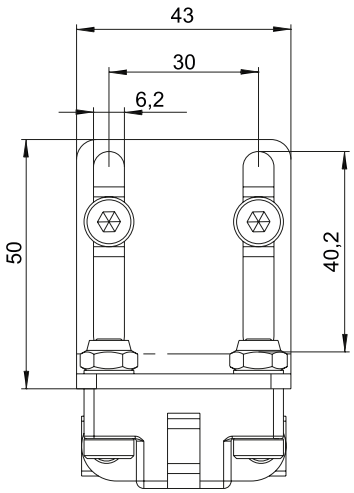

- Assembly versions

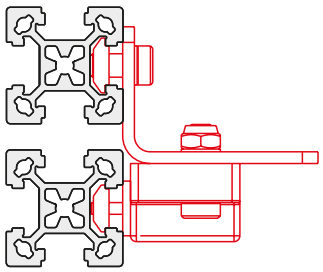

30 to 30 - Profile

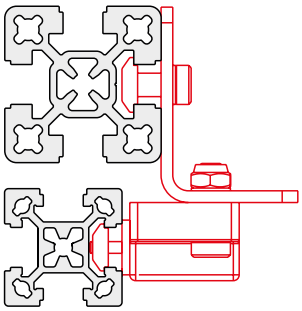

30 to 40 - Profile flush

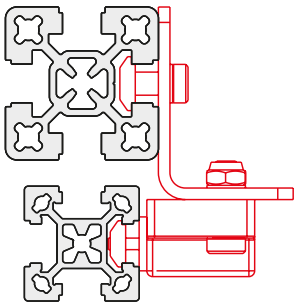

30 to 40 - Profile centred

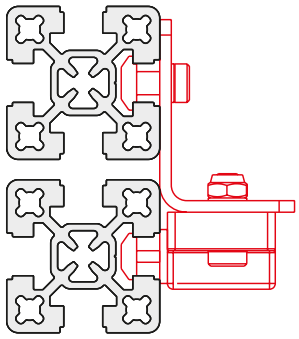

40 to 40 - Profile

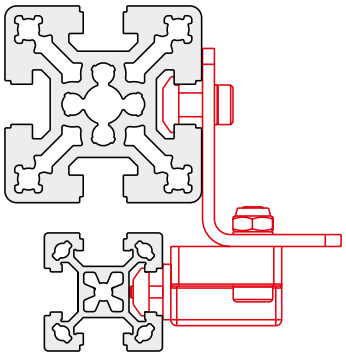

30 to 50 - Profile centred

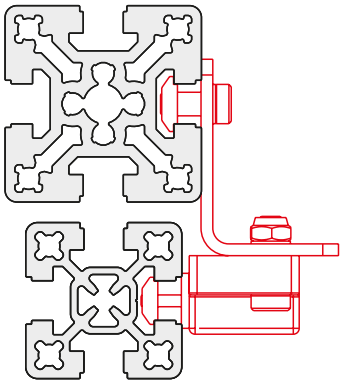

40 to 50 - Profile centred

Code No.	Type	Slot geom.
4010625	Magnetic lock universal with fixing set	30/40
4010626	Magnetic lock universal without fixing set	—

Ball catch universal

- Suitable from profile size 30 for all assembly versions
- Holding force 50 N

Material:
polyamide glasfibre reinforced
steel parts zincplated



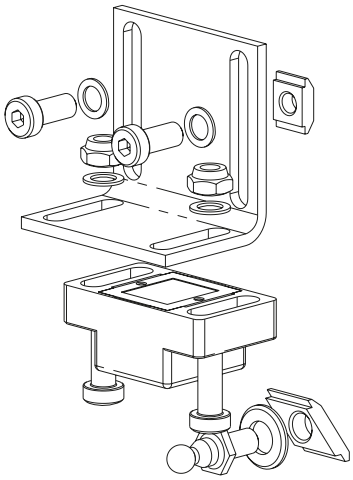

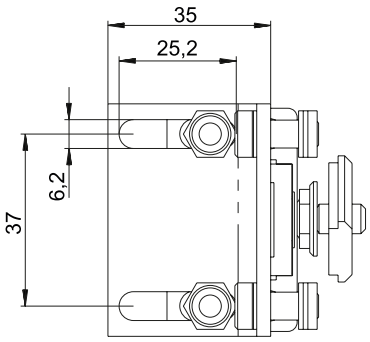

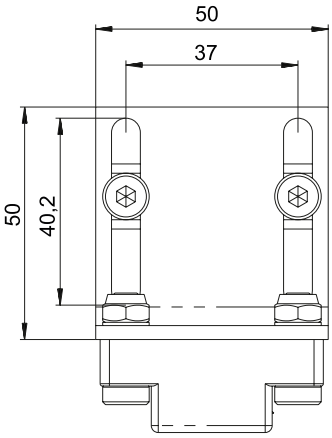

- Assembly versions

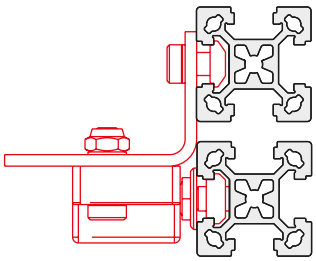
30 to 30 - Profile

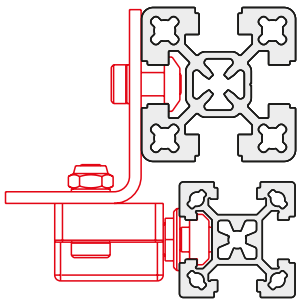
30 to 40 - Profile flush

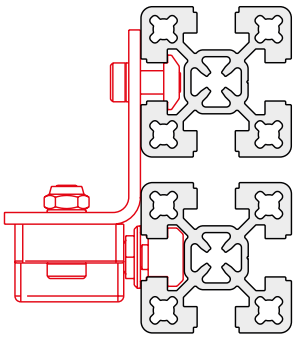
40 to 40 - Profile

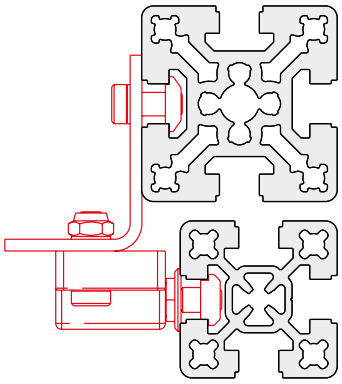
40 to 50 - Profile flush

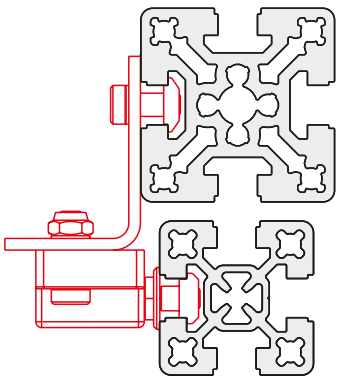
40 to 50 - Profile centred

Code No.	Type	Slot geom.
4010630	Ball catch universal with fixing set	30/40
4010631	Ball catch universal without fixing set	—

Accessories

Handle profile



- The stylish handle profile is available in bars that can be cut to length if required. Fitting holes are to be bored by the customer.

Material: Aluminium

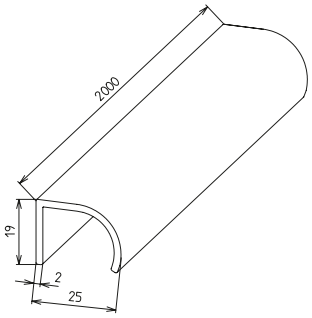

Code No.	Type
4015595	Handle profile, bar 2000 mm

Handle

- Complete with fastenings

Material: Aluminium, powder-coated RAL 9006, Galvanised fixation set



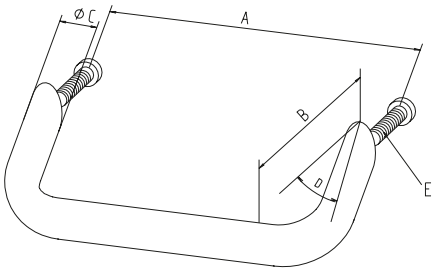

[mm]

Code No.	Type	A	B	C	D	E
4015599	Handle	128	50	20	35°	M6x40

Magnetic lock

- Magnetic lock complete with holder and fixation set.

Material: Plastic, galvanised steel parts, aluminium holder, stainless steel fixation set



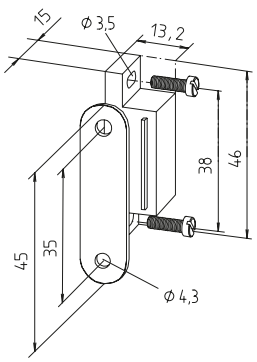

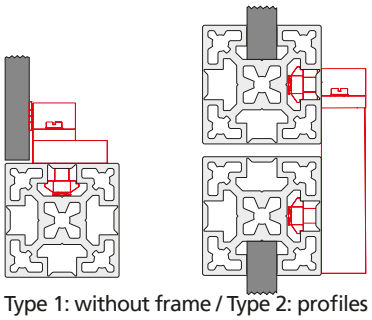

Type 1: without frame / Type 2: profiles central

Code No.	Type
4010605	1. without frame
4010604	2. profiles central

Order instruction:

- Purchase only in lot sizes and a multiple of that see product table below

Cover cap



- Plastic cover cap for end covering of G-profiles.

Material: Plastic, RAL9006

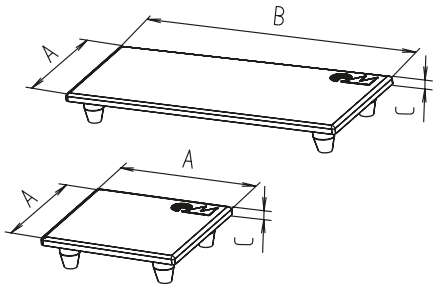

[mm]

Code No.	Type	lot sizes	A	B	C
4B68421	4G-40x40	10, 20, 30... pcs	40	40	3
4B78421	4G-40x80	10, 20, 30... pcs	40	80	3

Cover caps



- The screw heads and drill bores of the accessories are covered with caps. If necessary, they can be re-ordered as a pack.

Material: Plastic RAL 9006

Code No.	Type	lot sizes
4B685001	Hidden screw	100, 200, 300... pcs
4B685011	Cylinder screw	100, 200, 300... pcs
40185031	Hinges	100, 200, 300... pcs
4B685021	G-connector	100, 200, 300... pcs

Heavy loads with maximum stability

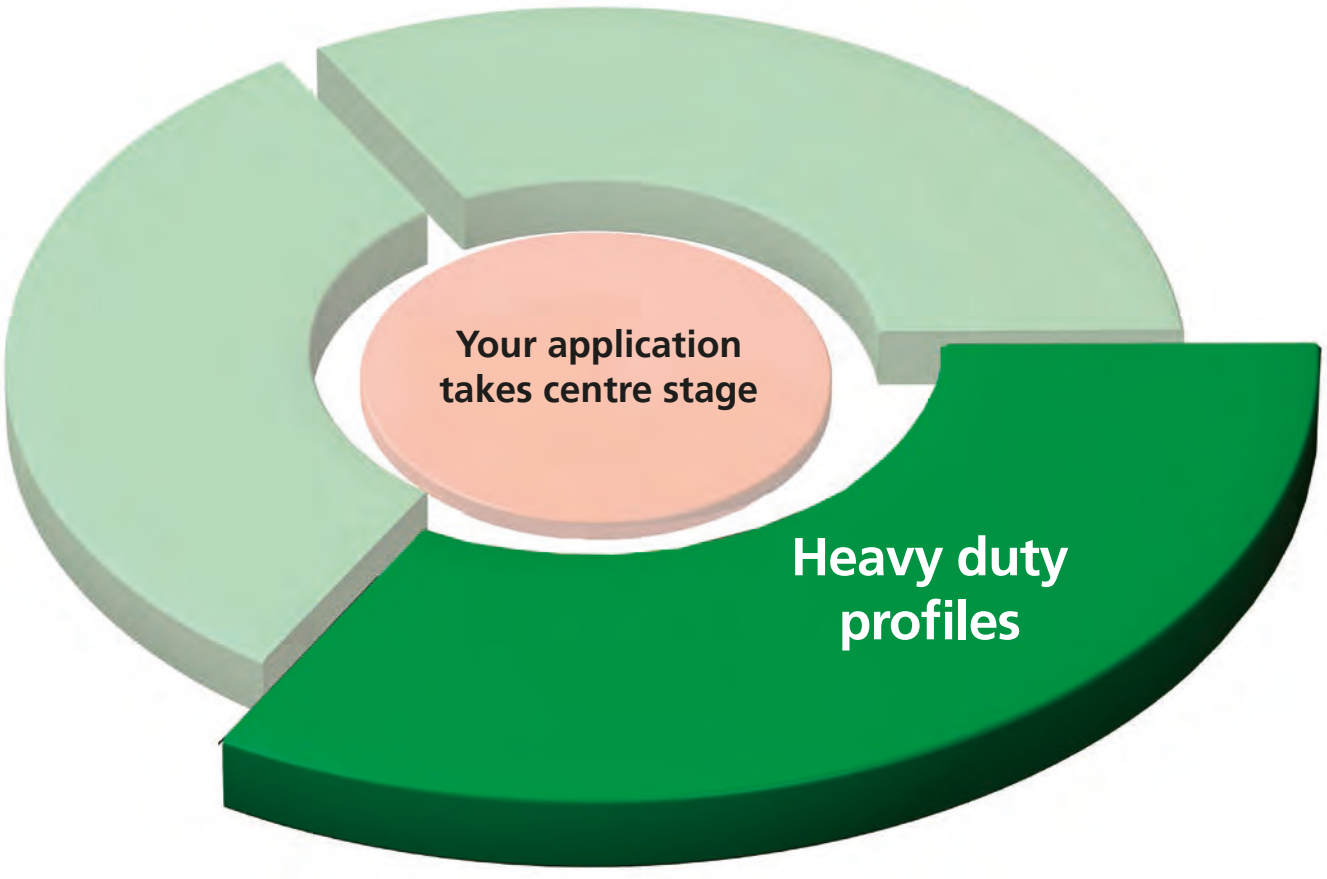

Features:

- Highly dynamic
- Large structures
- Easily transportable

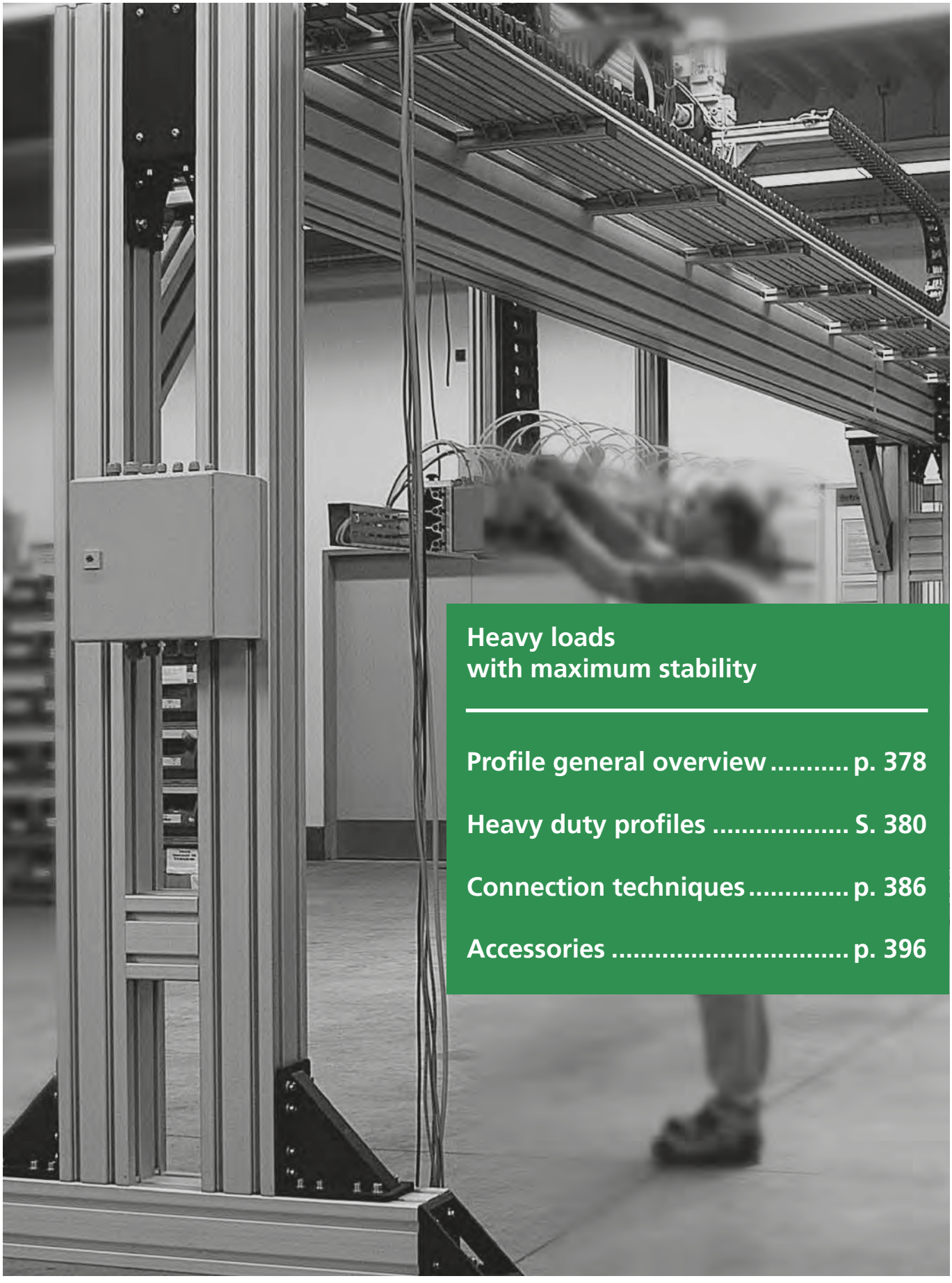

Heavy loads with maximum stability

Profile general overview ..... p. 378

Heavy duty profiles ..... S. 380

Connection techniques ..... p. 386

Accessories ..... p. 396

Heavy duty profile overview

Heavy duty profiles sizes

80

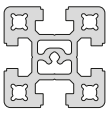

D-80x80
p. 380

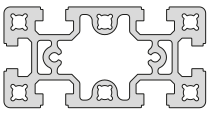

D-80x160
p. 380

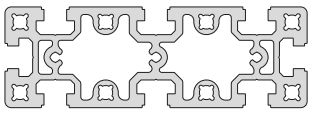

D-80x240
p. 381

160

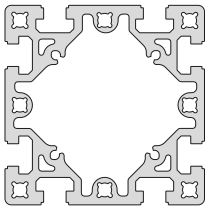

D-160x160
p. 381

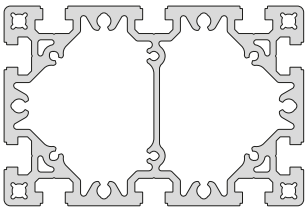

D-160x240
p. 382

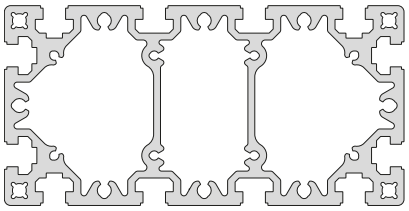

D-160x320
p. 383

Table of contents

RK ROSE+KRIEGER

Profiles

Overview ..... p. 378

Size 80 + 160 ..... p. 380 - 383

Connection techniques

Press mount connector load data ..... p. 384

Right-angle connections ..... p. 388

Cross connections ..... p. 392

Angle connections ..... p. 394

Face-to-face and parallel connections ..... p. 395

Accessories

Slot stones ..... from p. 398

Profile covers ..... from p. 402

Feet ..... from p. 404

Connecting plates ..... from p. 406

Heavy duty profiles / size 80

D-80x80



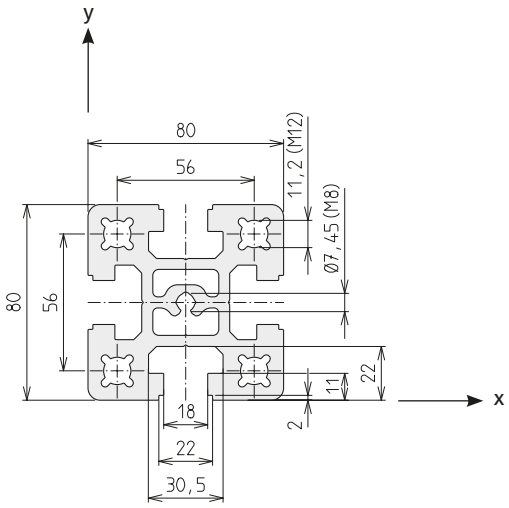

Code No. Profile D-80x80			Anodised
4C45000	Cut to size	max. 6000 mm	Clear
4C45001	Bar	6000 mm	Clear

Area	3200	mm²
I_x	198.0	cm⁴
I_y	199.3	cm⁴
I_t	44.9	cm⁴
W_x	49.6	cm³
W_y	49.8	cm³
Weight	8581	g/m

Connection	Quantity required per conn.	Slot geometry	Press mount connector	Code No. /unit
Press mount connector long.+transverse	1	D	-N- 80	4C16701

D-80x160

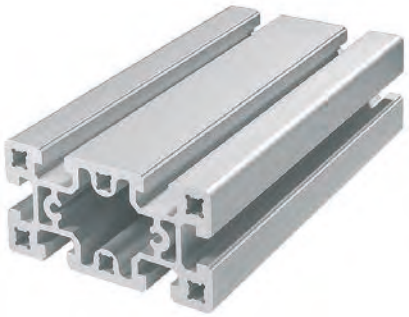

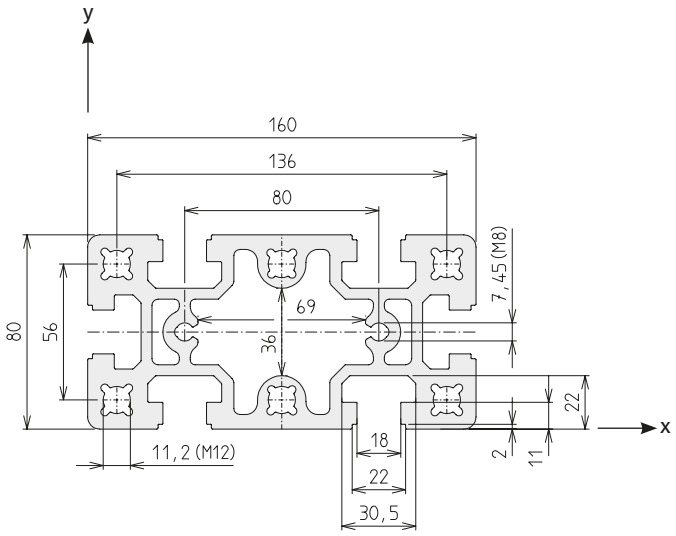

Code No. Profile D-80x160			Anodised
4C15000	Cut to size	max. 6000 mm	Clear
4C15001	Bar	6000 mm	Clear

Area	5212	mm²
I_x	367.5	cm⁴
I_y	1397.0	cm⁴
I_t	251.8	cm⁴
W_x	91.6	cm³
W_y	174.6	cm³
Weight	14073	g/m

Connection	Quantity required per conn.	Slot geometry	Press mount connector	Code No. /unit
long.	1	D	-N- 160	4C16700
transverse	2		-N- 80	4C16701

Note: Holes are designed as self-tapping screw channels (M8/M12)

D-80x240

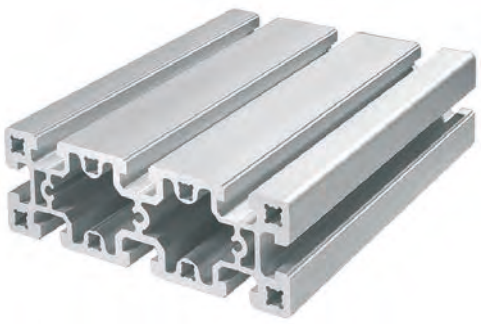

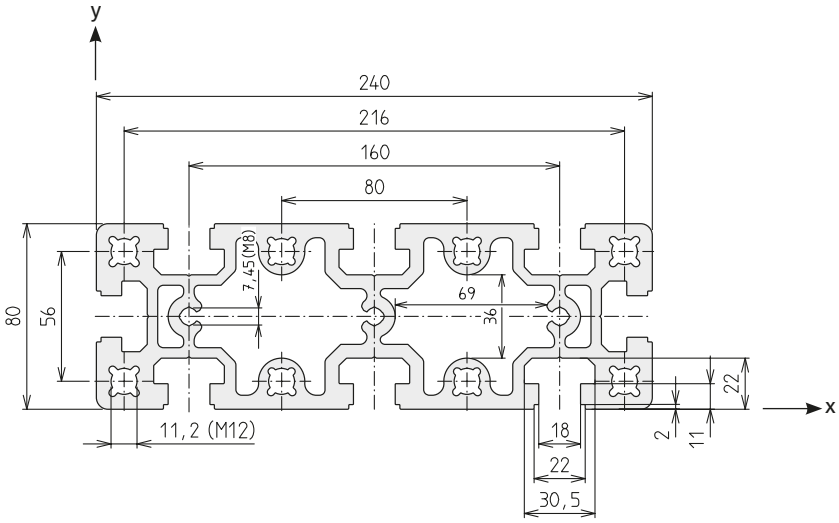

Code No. Profile D-80x240			Anodised
4C55000	Cut to size	max. 6000 mm	Clear
4C55001	Bar	6000 mm	Clear

Area	7422	mm²
I_x	540.8	cm⁴
I_y	4268.2	cm⁴
I_t	503.0	cm⁴
W_x	135.2	cm³
W_y	355.7	cm³
Weight	20015	g/m

Connection		Quantity required per conn.	Slot geometry	Press mount connector	Code No. / unit
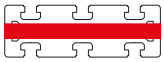	long.	1	D	-N- 240	4C56700
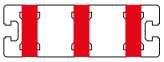	transverse	3		-N- 80	4C16701

D-160x160

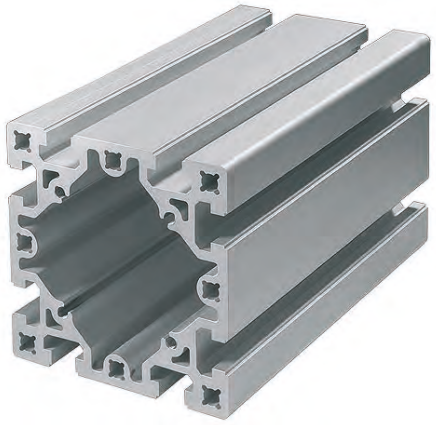

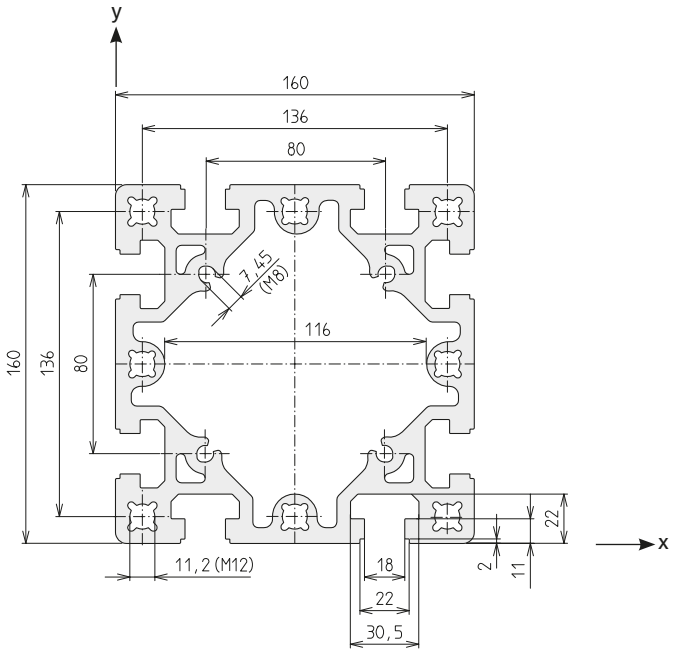

Code No. Profile D-160x160			Anodised
4C25000	Cut to size	max. 6200 mm	Clear
4C25001	Bar	6300 mm	Clear

Area	8131	mm²
I_x	2493.6	cm⁴
I_y	2493.6	cm⁴
I_t	1524.0	cm⁴
W_x	311.7	cm³
W_y	311.7	cm³
Weight	21955	g/m

Connection		Quantity required per conn.	Slot geometry	Press mount connector	Code No. / unit
	long. transverse	2	D	-N- 160	4C16700

Heavy duty profiles / size 160

D-160x240

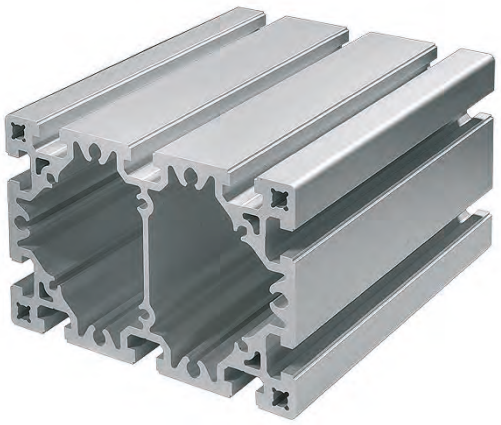

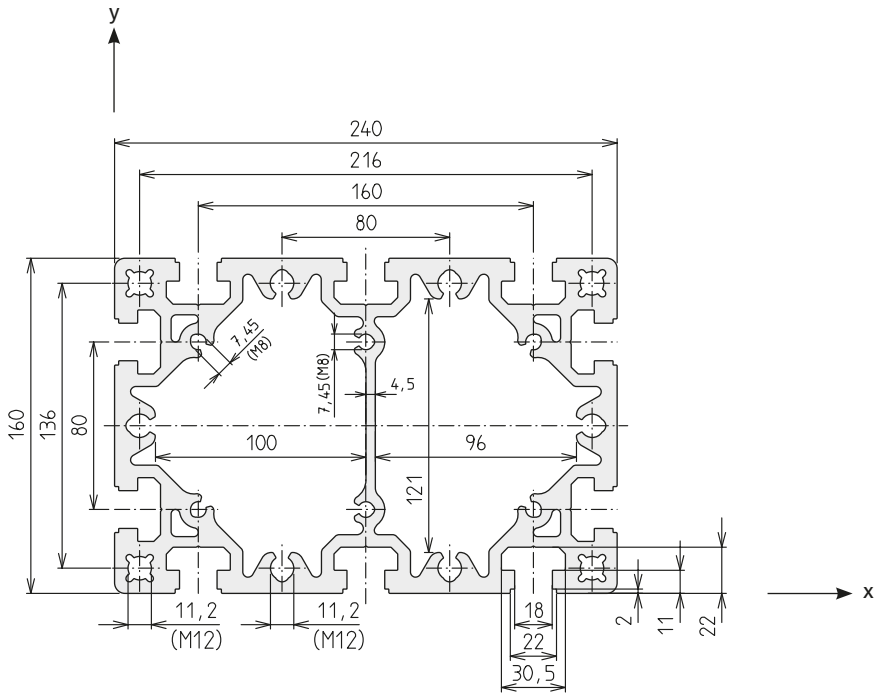

Code No. Profile D-160x240			Anodised
4C65000	Cut to size	max. 6000 mm	Clear
4C65001	Bar	6000 mm	Clear

Connection		Quantity required per conn.	Slot geometry	Press mount connector	Code No. /unit
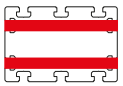	long.	2	D	-N- 240	**4C56700**
	transverse	3		-N- 160	**4C16700**

Area	10986	mm^2
I_x	3601.5	cm^4
I_y	7333.4	cm^4
I_t	2980.8	cm^4
W_x	450.2	cm^3
W_y	611.1	cm^3
Weight	29647	g/m

D-160x320

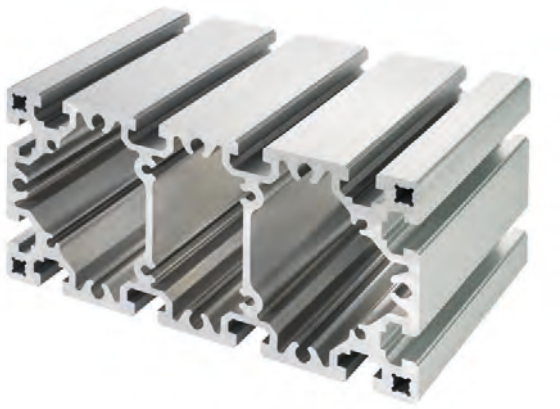

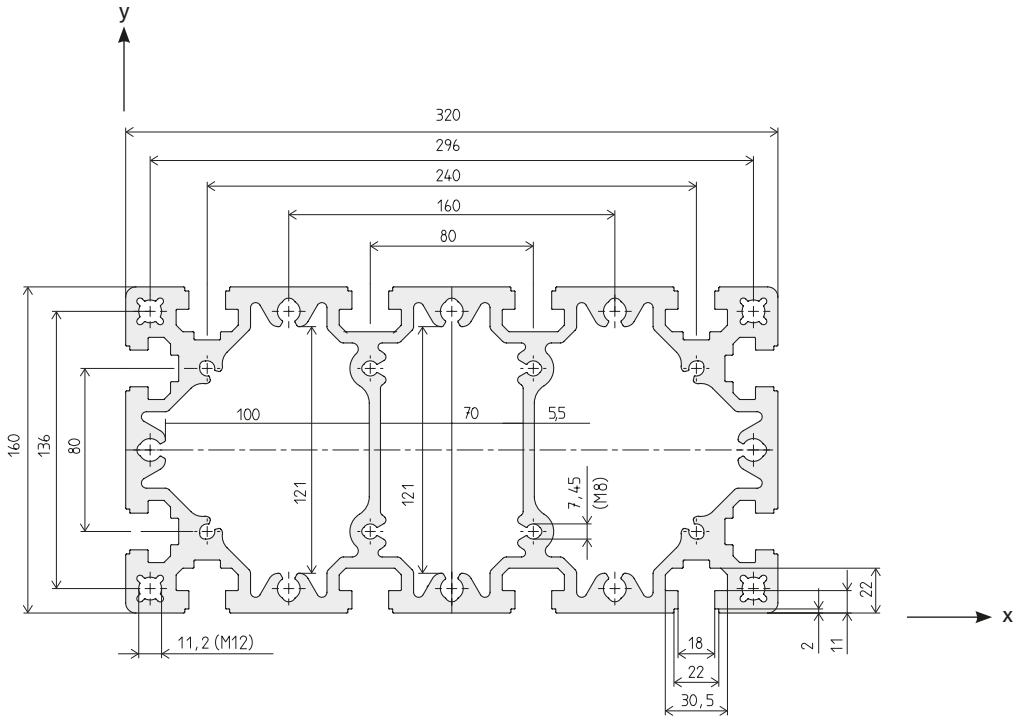

Code No. Profile D-160x320			Anodised
4C35000	Cut to size	max. 6200 mm	Clear
4C35001	Bar	6300 mm	Clear

Connection	Quantity required per conn.	Slot geometry	Press mount connector	Code No. /unit
long.	4	D	-N- 160/320	**4C36700**
transverse	4		-N- 160	**4C16700**

Area	13671	mm^2
I_x	4656.0	cm^4
I_y	15618.3	cm^4
I_t	4489.5	cm^4
W_x	582.0	cm^3
W_y	976.1	cm^3
Weight	36912	g/m

Note: Holes are designed as self-tapping screw channels (M8/M12)

Technical data

D-profiles with press mount connector -static-

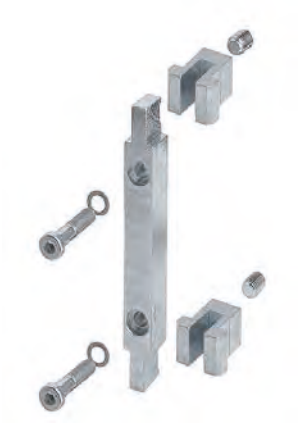

Press mount connector -N-



Press mount connector -R-

Press mount connectors	Version	Profile	Weight
1x	Press mount connector Type -N-	80x80	0.30 kg
1x		80x160 (long.)	0.52 kg
2x		80x160 (trans.)	0.60 kg
1x		80x240 (long.)	0.73 kg
3x		80x240 (trans.)	0.90 kg
2x		160x160	1.04 kg
2x		160x240 (long.)	1.46 kg
3x		160x240 (trans.)	1.56 kg
4x		160x320 (long.)	2.08 kg
4x		160x320 (trans.)	2.08 kg
1x	Press mount connector Type -R-	80x80	0.25 kg
1x		80x160 (long.)	0.48 kg
2x		80x160 (trans.)	0.50 kg
1x		80x240 (long.)	0.69 kg
3x		80x240 (trans.)	0.75 kg
2x		160x160	0.96 kg
2x		160x240 (long.)	1.38 kg
3x		160x240 (trans.)	1.44 kg
4x		160x320 (long.)	1.92 kg
4x		160x320 (trans.)	1.92 kg

Connection techniques

Versions

Right-angle connections

-N- -R-

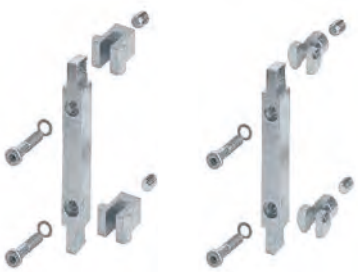

Press mount connector



Angle bracket

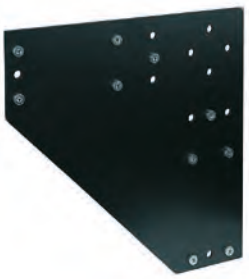

Bracing plate



Corner connecting plate

Cross connections



Keyed clamp connector -Q-

Angle connections



Frame joint



Keyed clamp connector -P-

Face-to-face and parallel connections



Connecting plate

Table of contents

Connection techniques

Right-angle connections

Press mount connector ..... from p. 388

Angle bracket ..... from p. 390

Bracing plate ..... from p. 391

Corner connecting plate ..... from p. 391

Cross connections

Keyed clamp connector -Q- ..... from p. 392

Angle connections

Frame joint ..... from p. 394

Face-to-face and parallel connections

Keyed clamp connector -P- ..... from p. 395

Connecting plate ..... from p. 395

Right-angle connections

Press mount connector

- Simple, cost-effective and high-strength profile connection
- No profile machining necessary
- Can be disconnected at any time and reused
- Minimal effort required in construction

Material:
Galvanised steel

Includes:
The Order No. includes one press mount connector. Depending on the orientation of the connection (longitudinal or transverse), the appropriate number of press mount connectors must be ordered. Please note the information and the connection pictograms in the profile data on page 380– 383.

Type -N-

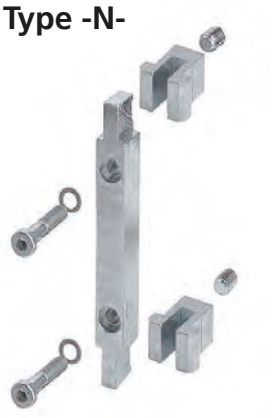

Code No.	Type	Weight	For profile (quantity required per connection)
4C16701	-N-80	0.30 kg	80x80 (1x), 80x160 (2x), 80x240 (3x)
4C16700	-N-160	0.52 kg	80x160 (1x),160x160 (2x),160x240 (3x),160x320 (4x)
4C36700	-N-160/320	0.52 kg	160x320 (4x)
4C56700	-N-240	0.73 kg	80x240 (1x), 160x240 (2x)

Type -R-



Code No.	Type	Weight	For profile (quantity required per connection)
4C16711	-R-80	0.25 kg	80x80 (1x), 80x160 (2x), 80x240 (3x)
4C16710	-R-160	0.48 kg	80x160 (1x),160x160 (2x),160x240 (3x),160x320 (4x)
4C36710	-R-160/320	0.48 kg	160x320 (4x)
4C56710	-R-240	0.69 kg	80x240 (1x), 160x240 (2x)

Assembly steps (press mount connector -N-)

1. Screw set screw M10 (2) into thrust compression piece -N- (1)
2. Place the thrust compression piece -N- (1) into the profile for the connection strip (3) as an assembly aid
3. Align the connection strip (3) and fix it in the screw channel with M8 socket head cap screws (4). It is recommended to create the thread with a thread forming tap. Tighten it just until the connector is fixed, max. 5 Nm. However, oiled screws can be screwed directly into the profile.
4. Remove the thrust compression pieces (5) and push them into the slot(s) of the profile to be fixed*
5. Insert the profile with the connection strips (6) into the profile with the thrust compression pieces (7)
6. Push the thrust compression pieces (8) into the connection strip
7. Tighten the set screws M10 (2) to 25 Nm (Type -N- and -R- 80 to 12 Nm)

*Alternatively, it is also possible to retrofit thrust compression pieces -R- in the slot

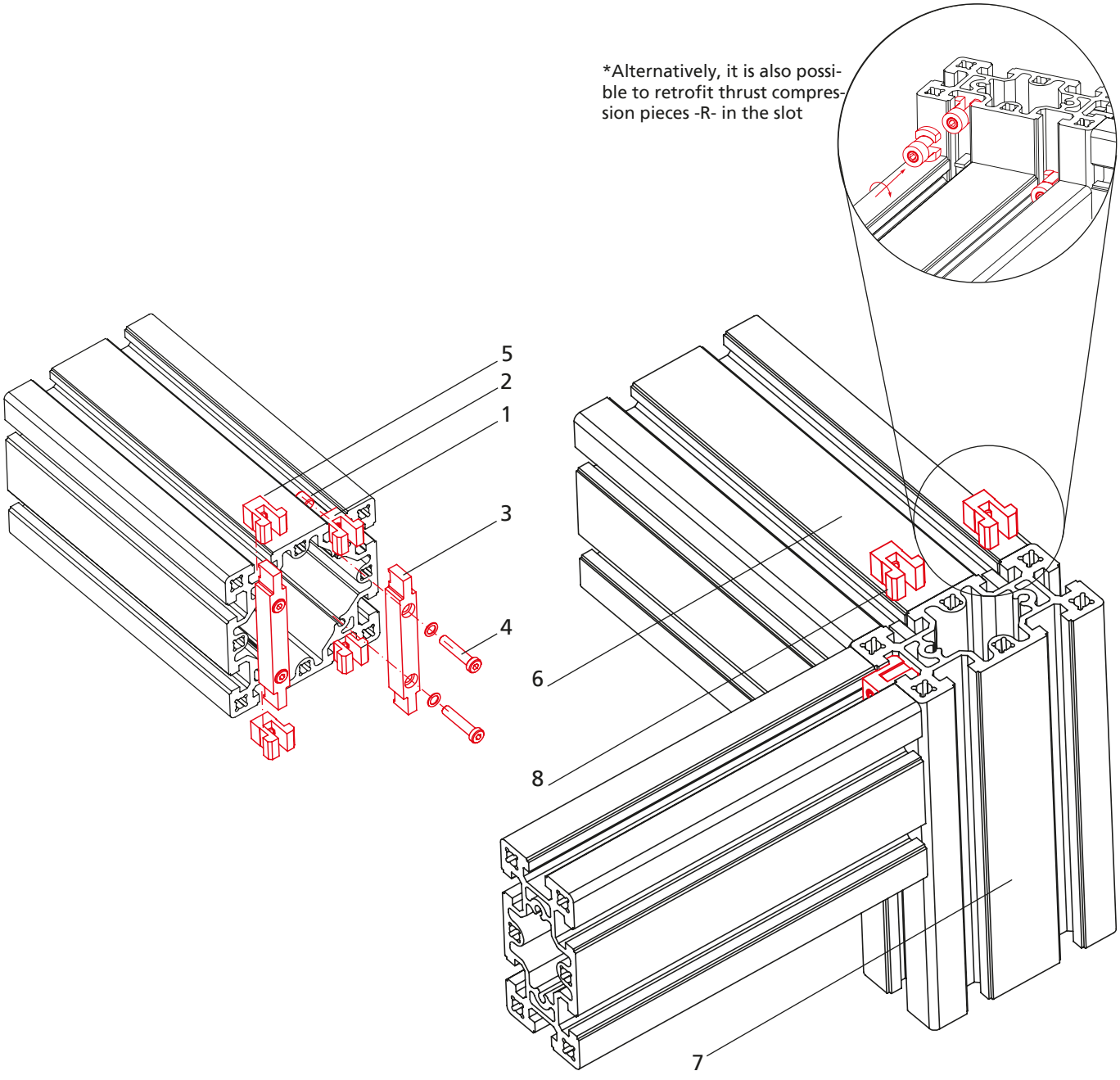

Right-angle connections

Angle bracket

Material: Gravity die-cast aluminium, black powder-coated
Angle tolerance: ±5'



1 80x160x160

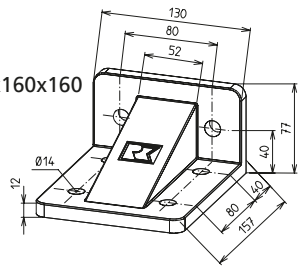

2 160x160x80

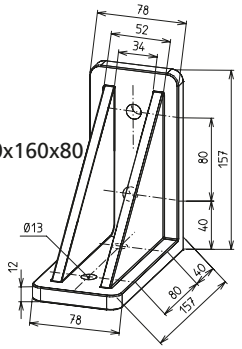

3 160x160x160-1

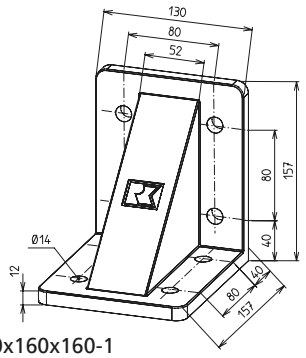

4 160x160x160-2

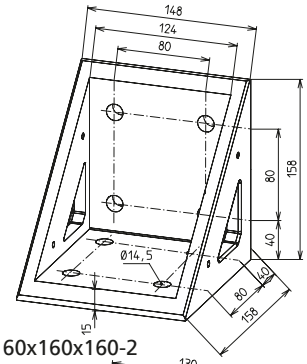

5 160x240x160

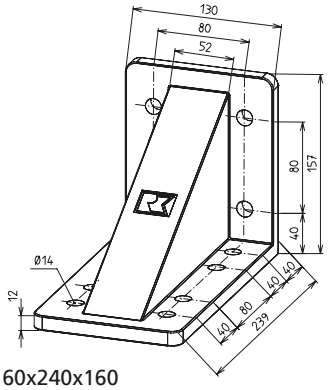

6 240x240x160

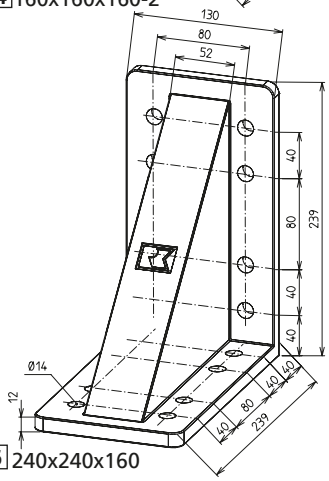

Application examples

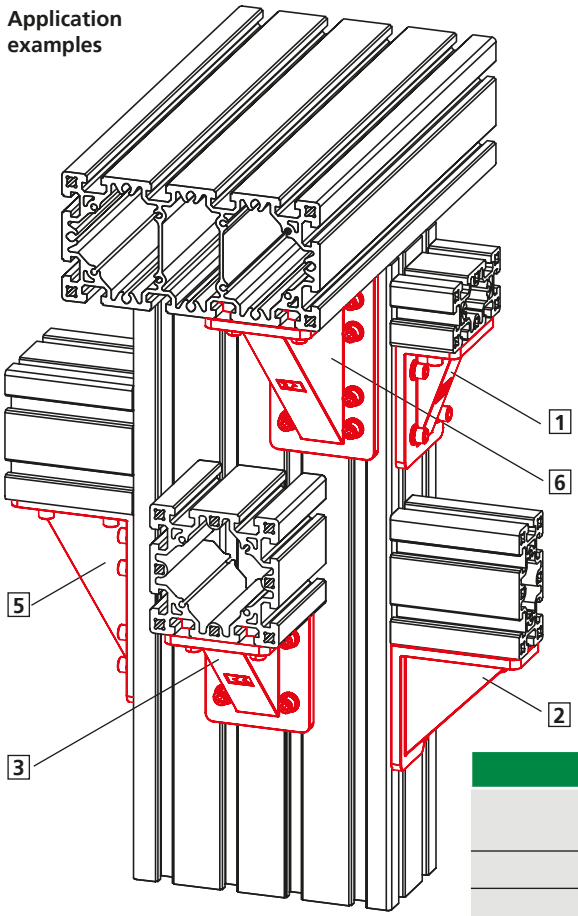

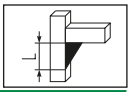

Code No.	Type	Weight	L [mm]
4C12100	80x160x160	1.0 kg	80
			160
4C22100	160x160x80	1.2 kg	160
4C22101	160x160x160-1	1.5 kg	160
4C22102	160x160x160-2	2.1 kg	160
4C22103	160x240x160	2.1 kg	160
			240
4C22104	240x240x160	2.8 kg	240

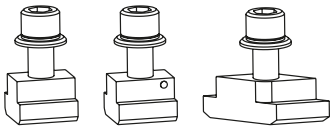

-N- -N/S- -R-

Fixing sets for angle bracket (one screw with slot stone and washer)

Code No.	Type	Weight
4C16200	M12x30, slot stone -N-	0.14 kg
4C16201	M12x30, slot stone -N/S-	0.14 kg
4C16202	M12x30, slot stone -R-	0.13 kg

Bracing plate

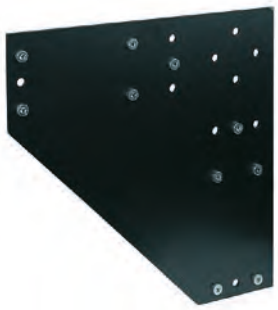

- The bracing plates are for the superficial bracing of a profile connection.

Material:
Black powder-coated steel

Includes: Complete with fastenings

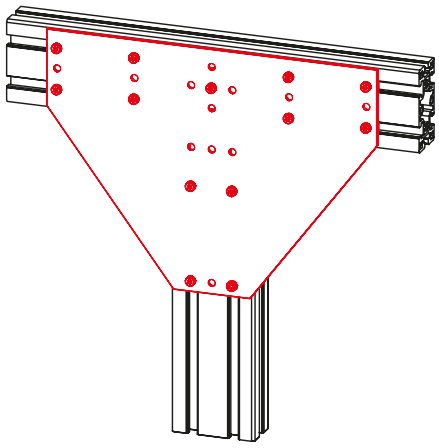

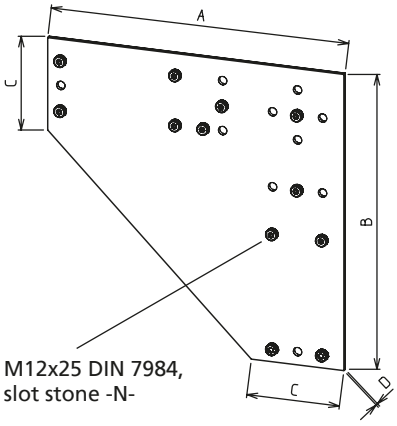

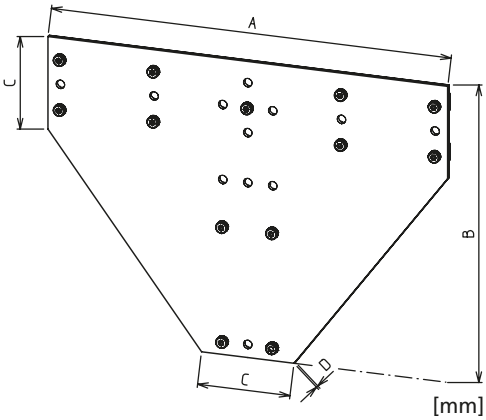

[mm]

Code No.	Type	A	B	C	D	Weight
4C12110	-L-	474	474	148	6	9.3 kg
4C12111	-T-	640	474	148	6	12.0 kg

Corner connecting plate



- The corner connecting plate is for supporting the press mount connectors (e.g. relieving high tensile loads).

Material:
Black powder-coated steel

Includes: Complete with fastenings

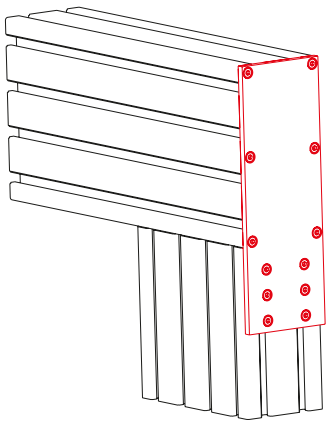

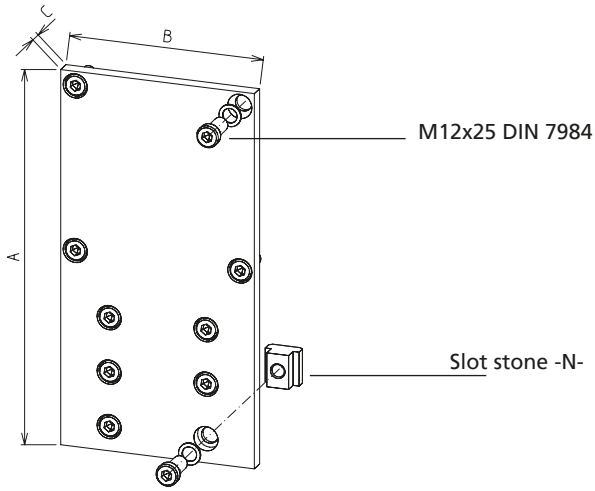

[mm]

Code No.	Type	A	B	C	Weight
4C22400	160x160	310	160	12	5.3 kg
4C22401	160x320	470	160	12	7.7 kg

Cross connections

Keyed clamp connector -Q-



- Simple realisation of cross connections
- No profile machining necessary

Material:
Galvanised steel

Includes:
Complete fixing set for one connection

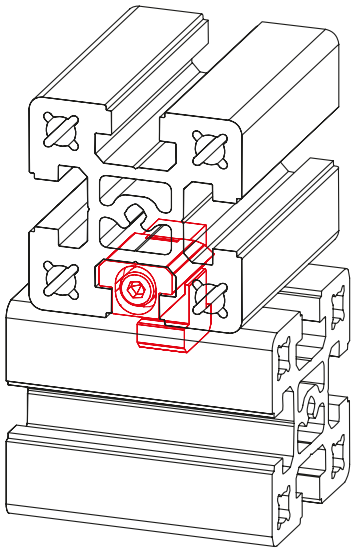

[mm]

Code No.	Type	Weight
4C16501	Keyed clamp connector -Q-	0.22 kg

Angle connections

Frame joint

- For supporting a structure at a 45° angle under high loads

Material: Black powder-coated gravity die-cast aluminium
Includes: One complete frame joint with fastenings
2 cover plates with fastenings
available as an accessory



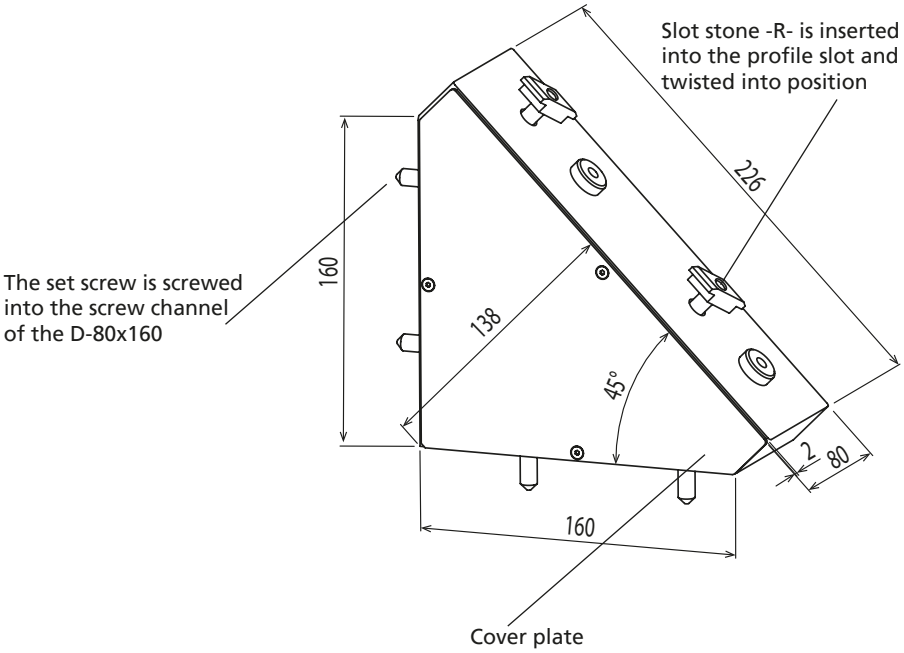

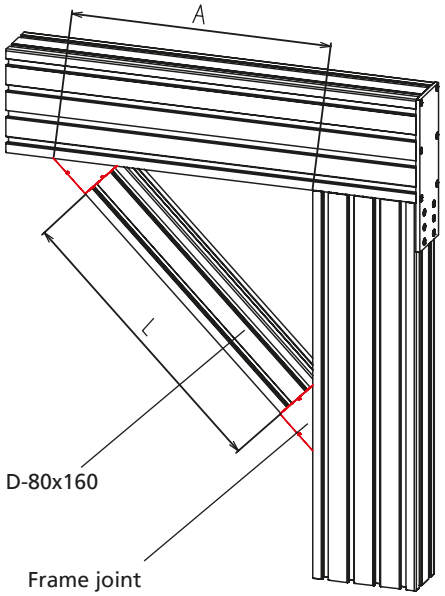

Cut to size D-80x160:
L= (A : 0.707) - 355

[mm]

Code No.	Type	Weight
4C12105	Frame joint 45°	1.8 kg
4C12106	Two cover plates	0.6 kg

Face-to-face and parallel connections

Keyed clamp connector -P-



- For parallel flange mounting of profiles
- No profile machining necessary

Material:
Galvanised steel

Includes:
Complete fixing set for one connection

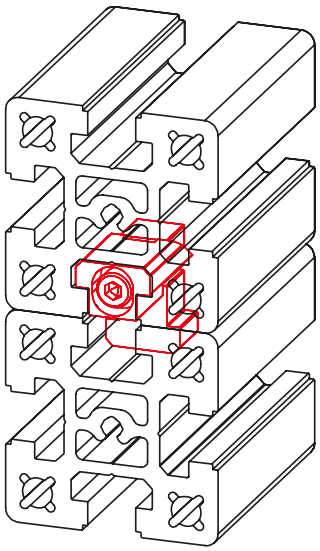

[mm]

Code No.	Type	Weight
4C16502	Keyed clamp connector -P-	0.22 kg

Connecting plate



- For the flange connection of profile ends
- For extending profiles and extending existing structures

Material:
Galvanised steel

Includes:
Complete fixing set for one connection

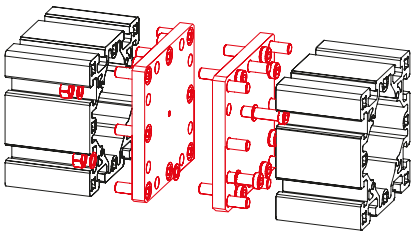

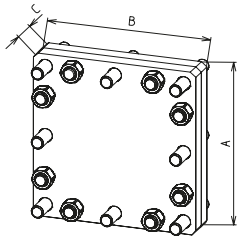

[mm]

Code No.	Type	A	B	C	Weight
4C46410	80x80	80	160	30	1.7 kg
4C16410	80x160	80	160	30	3.3 kg
4C56410	80x240	80	240	30	4.9 kg

[mm]

Code No.	Type	A	B	C	Weight
4C16411	160x160	160	160	30	6.5 kg
4C66410	160x240	160	240	40	14.3 kg
4C16412	160x320	160	320	40	16.6 kg

Accessories

Versions



Adapter slot stone



Slot stone -N-



Slot stone -N/S-



Slot stone -N/L-



Slot stone -R-



Slot stone -VF-



Slot stone -RF-



Cover plate



Cover profile



Levelling foot



Levelling foot
with fixing bracket



Connecting plate for feet



Base plate

Table of contents

Accessories

Slot stones

Adapter slot stone ..... p. 398

Slot stone -N- ..... p. 398

Slot stone -N/S- ..... p. 399

Slot stone -N/L- ..... p. 399

Slot stone -R- ..... p. 400

Slot stone -VF- ..... p. 400

Slot stone -RF- ..... p. 401

Profile covers

Cover plate ..... p. 402

Cover profile ..... p. 403

Feet

Levelling foot ..... p. 404

Levelling foot with fixing bracket ..... p. 405

Connecting plates

Connecting plate for feet ..... p. 406

Base plate ..... p. 407

Slot stones

Adapter slot stone

- For connecting the elements of the profile assembly system with the 10 mm-wide slot to the D-profiles with the 18 mm-wide slot.

Material:
Galvanised steel

Includes:
1 adapter slot stone



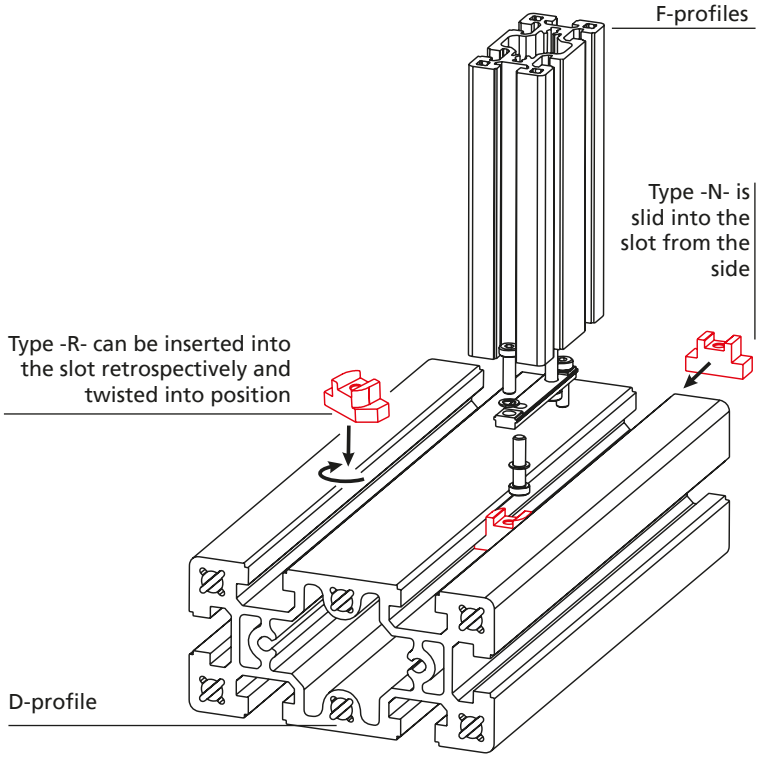

Code No.	Type	Version
4C12201	-N-	Slot 18 to 10 mm*
4C12202	-R-	Slot 18 to 10 mm*

*Slot 18 mm = D-profiles
Slot 10 mm = F-profiles

Slot stone -N- (similar to DIN 508)

- For fixing accessories to a profile.
- This slot stone should be slid into place before assembly.

Material:
Galvanised steel
Strength class 8



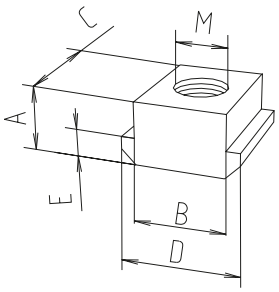

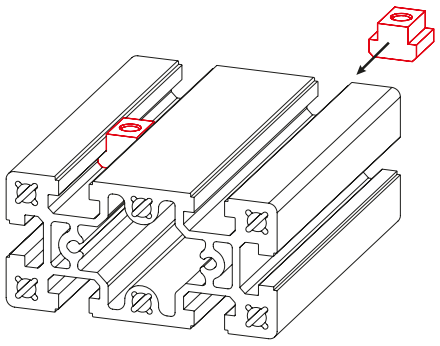

[mm]

Code No.	Type	A	B -0.3/-0.6	C	D	E	M	Weight
4C12203	M8	18.5	18	28	28	10	M8	0.1 kg
4C12204	M10	18.5	18	28	28	10	M10	0.1 kg
4C12205	M12	18.5	18	28	28	10	M12	0.1 kg

Slot stone -N/S- (similar to DIN 508)

- Same geometry and function as slot stone -N-
- A spring clip prevents the slot stone from slipping
- For easier attachment mounting

Material:
Galvanised steel
Strength class 8



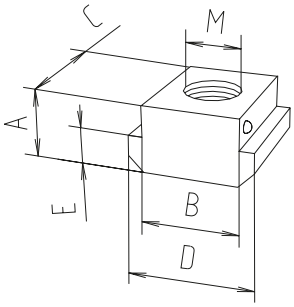

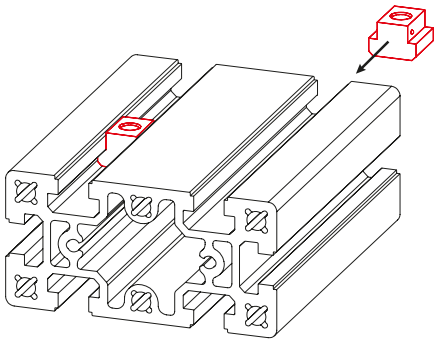

[mm]

Code No.	Type	A	B -0.3/-0.6	C	D	E	M	Weight
4C12206	M8	18.5	18	28	28	10	M8	0.1 kg
4C12207	M10	18.5	18	28	28	10	M10	0.1 kg
4C12208	M12	18.5	18	28	28	10	M12	0.1 kg

Slot stone -N/L- (similar to DIN 508)

- Same geometry and function as slot stone -N-
- Higher perm. force due to the longer version

Material:
Galvanised steel
Strength class 8



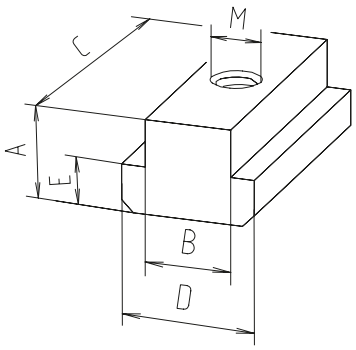

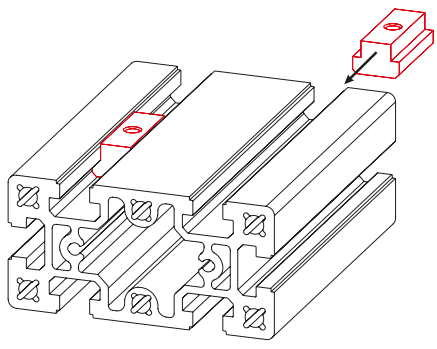

[mm]

Code No.	Type	A	B -0.3/-0.6	C	D	E	M	Weight
4C12209	M10	18.5	18	56	28	10	M10	0.2 kg
4C12210	M12	18.5	18	56	28	10	M12	0.2 kg

Slot stones

Stone stone -R-

- The slot stone is inserted anywhere in the profile slot
- The action of tightening the slot stone turns it into its final clamping position

Material:
Galvanised steel
Strength class 8

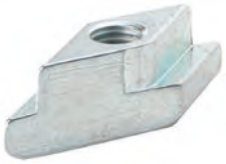

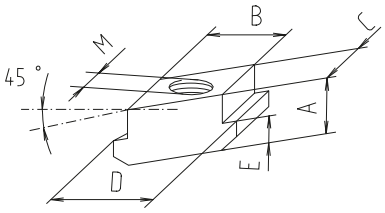

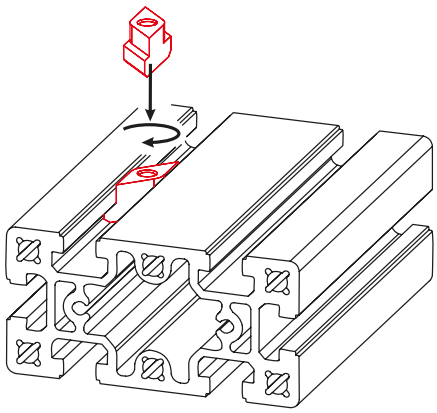

[mm]

Code No.	Type	A	B -0.3/-0.6	C	D	E	M	Weight
4C12211	M8	18.5	18	18	28	10	M8	0.1 kg
4C12212	M10	18.5	18	18	28	10	M10	0.1 kg
4C12213	M12	18.5	18	18	28	10	M12	0.1 kg

Slot stone -VF-

- For fixing attachments under low loads
- Slid into the profile slot from the side

Material: Galvanised steel



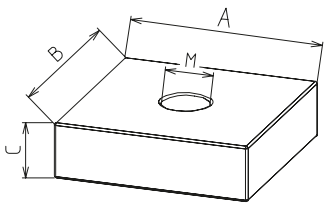

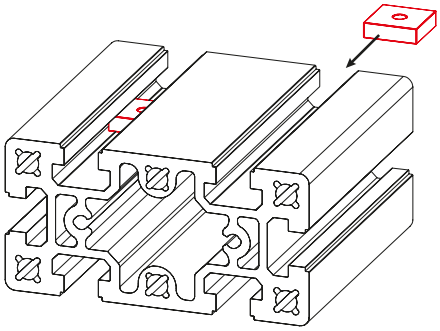

[mm]

Code No.	Type	A	B	C	M	Weight
4C16204	M6	28	28	8	M6	0.05 kg
4C16203	M8	28	28	8	M8	0.04 kg

Slot stone -RF-

- For fixing attachments under low loads
- The slot stone is inserted anywhere in the profile slot
- The action of tightening the slot stone turns it into its final clamping position

Material:
Galvanised steel



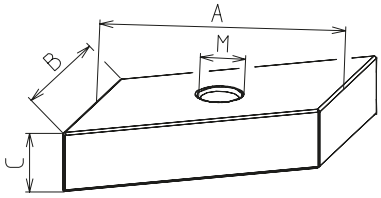

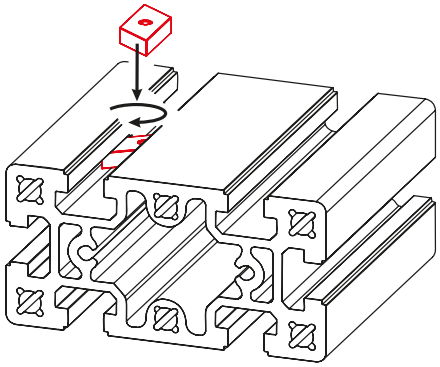

[mm]

Code No.	Type	A	B	C	M	Weight
4C16205	M6	28	18	8	M6	0.04 kg
4C16206	M8	28	18	8	M8	0.04 kg

Profile covers

Cover plates

- For covering the profile ends
- Fixed with socket head button screws

Material:
Black powder-coated galvanised steel



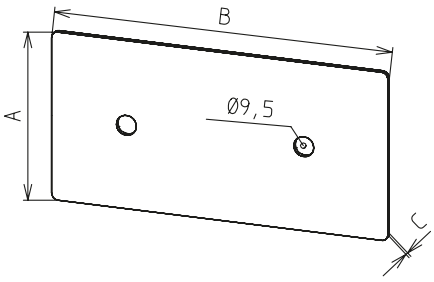

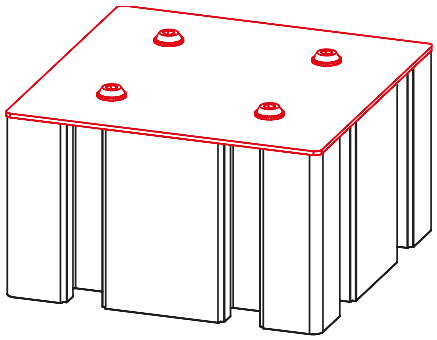

[mm]

Code No.	Type	A	B	C	Weight
4C42410	80x80	80	80	2	0.1 kg
4C12410	80x160	80	160	2	0.2 kg
4C52410	80x240	80	240	2	0.3 kg
4C22410	160x160	160	160	2	0.4 kg
4C62410	160x240	160	240	2	0.6 kg
4C32410	160x320	160	320	2	0.8 kg

Cover profile

- For the flush covering of longitudinal slots.
- Provides protection against soiling
- For fixing cables routed in the slots

Material:
Black plastic

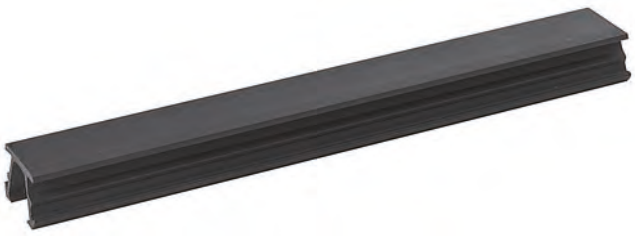

Code No.	Type
4C10501	2 m bar

Feet

Order instruction:

- Purchase only in lot sizes and a multiple of that see product table below

- The levelling feet are available in different versions.

Material:
Black plastic foot, galvanised spindle

Levelling foot



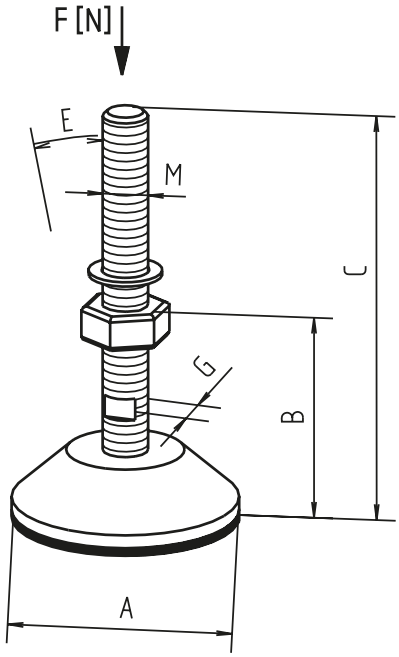

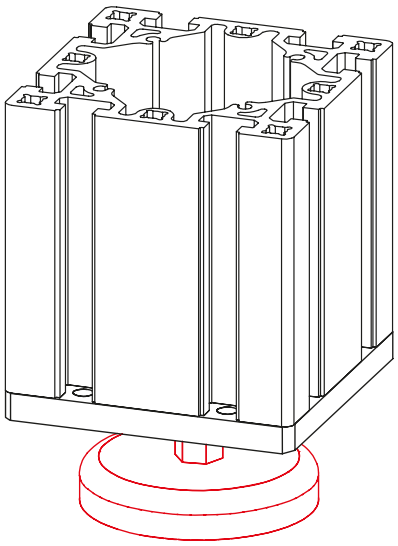

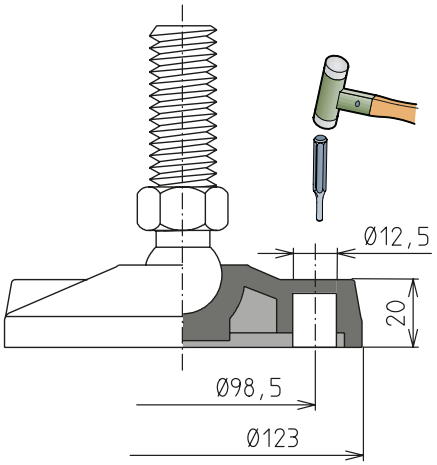

*With vibration absorber

**With this version, 2 fixing holes can be punched through

Code No.	Type	lot sizes	A	B	C	M	E	G	Weight	F [N]
4016301	M8	–	47	15	40	M8	15°	–	0.03	1,500
4016303	M12	–	80	24	117	M12	15°	12	0.14	7,000
4046312	M20*	–	123	70	215	M20	15°	16	0.70	10,000
4696302	M20	–	123	61	207	M20	15°	16	0.60	20,000
Foot with fixing hole (see diagram)**										
4C16300	M20	–	123	70	155	M20	8°	22	0.60	45,000
40166061	Fixing bolt 8x60	4, 8, 12... pcs								

Levelling foot with fixing bracket

- This fixing bracket can be used if it is necessary for structural reasons to attach a foot to the side of the profile.

Material:
Gravity die-cast aluminium angle bracket,
fastenings: Galvanised spindle

Includes:
One fixing bracket with levelling foot and fastenings



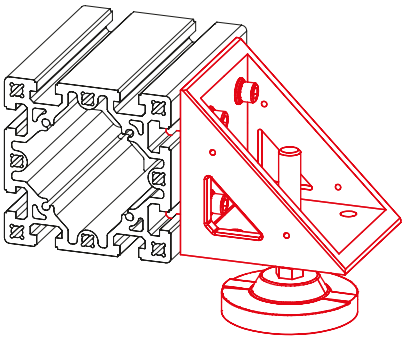

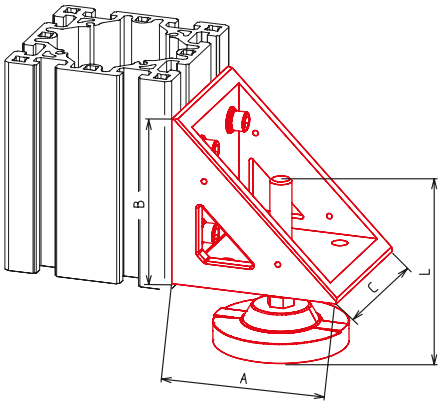

Code No.	Type	A	B	C	L	Weight
4C22105	M20	158	158	148	155	3.3 kg

Connecting plates

Connecting plate for feet

- Connecting plate with tapped hole for feet
- Also suitable for taking eye bolts.
- As of type 160x240 the plate has 2 tapped holes.

Material:
Galvanised steel

Includes:
Connecting plate with complete fixing set for connection to one profile
*Profile 80x80 has a screw channel of Ø7.45 (M8). If using a connecting plate/foot M12, a hole must be drilled in this channel. The drill listed below should ideally be used.



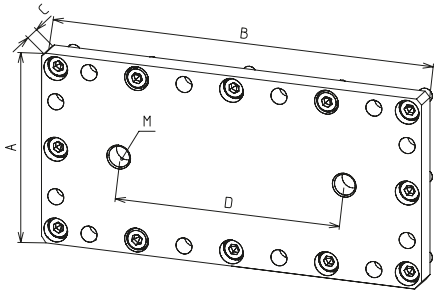

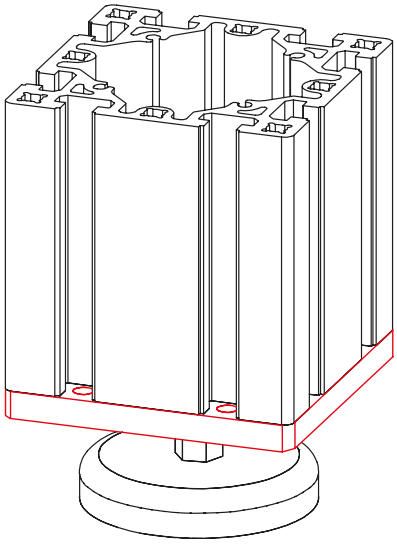

Adjustment range 0-28 mm
Max. compressive force 20 KN

Code No.	Type	A	B	C	D	M	Weight
4C46405	80x80*	80	80	15	0	12	0.7 kg
4C16405	80x160	80	160	15	0	20	1.4 kg
4C56405	80x240	80	240	15	130	12	2.2 kg
4C26405	160x160	160	160	15	0	20	2.9 kg
4C66405	160x240	160	240	20	130	20	5.8 kg
4C36405	160x320	160	320	20	190	20	7.7 kg
4006652	Drilling fixture for profile D-80x80 / foot M12						

Base plate

- For taking high supporting forces
- The four levelling feet help to align a structure exactly
- If necessary, the feet can be screwed to the floor

Material:
Black powder-coated galvanised steel base plate, reinforced black polyamide foot, galvanised spindle, galvanised fastenings

Includes: Complete base plate with four levelling feet and fastenings for the connection of one profile



Fig. 1

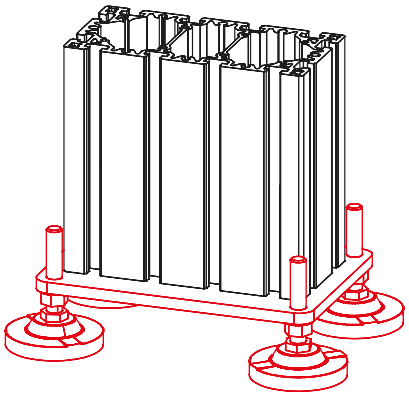



Fig. 2

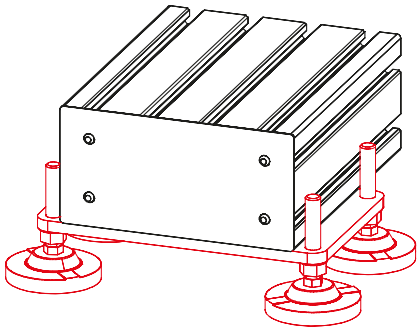

Base plate with slot stones for the cross connection of one profile 160x320

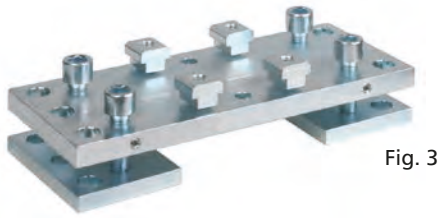

Fig. 3

Fmax per foot
45,000 N

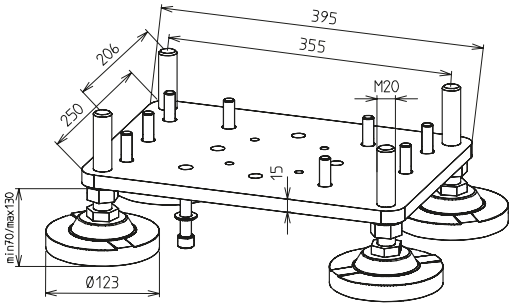

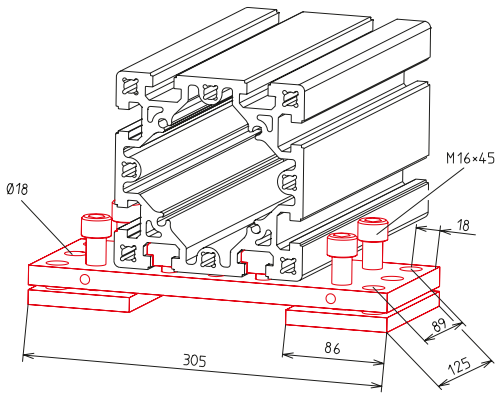

Code No.	For profile	Weight	Fig.
4C26406	160x160	13.3 kg	1
4C36408	160x240	13.6 kg	1
4C36406	160x320	13.7 kg	1
4C36407	160x320 with slot stones	14.7 kg	2
4C26407	160, adjustable	8.2 kg	3

Contents

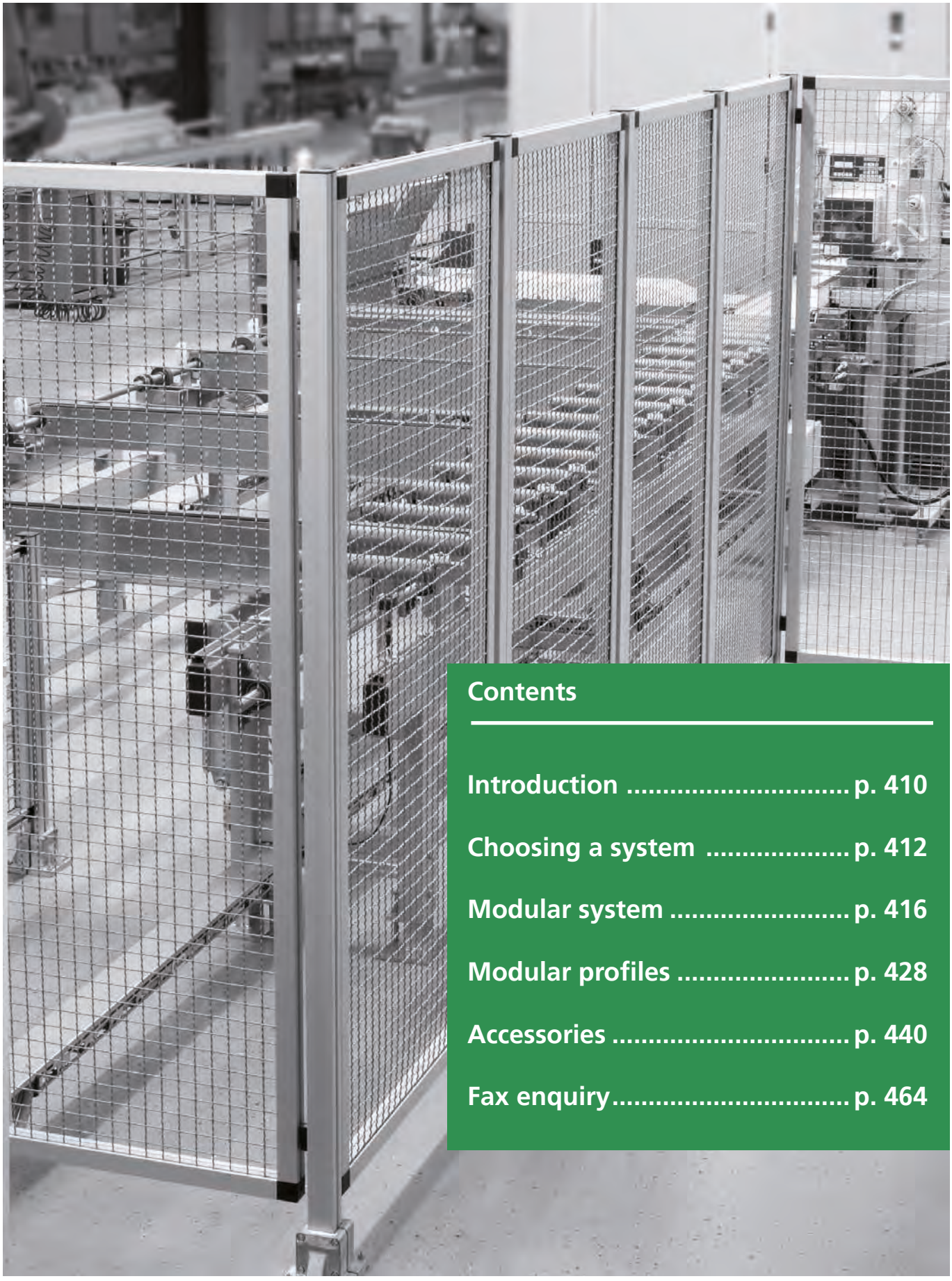

Contents

Introduction ..... p. 410
Choosing a system ..... p. 412
Modular system ..... p. 416
Modular profiles ..... p. 428
Accessories ..... p. 440
Fax enquiry ..... p. 464

Introduction

Due to the ever increasing automation of manufacturing processes and equipment, the protection of people from sources of danger is growing in importance. The safety guard has a grid design and therefore reduces the effort required from the user in planning, construction and assembly to a minimum.
It complies with the new Machinery Directive 2006/42/EC.

A modern connector that meets the legal requirements for safety devices safely fixes post and safety guard element. Posts and safety guard elements come with all attachments on delivery, so safety guard elements can be installed without tools. After the posts are secured to the substrate, the safety guard elements need only been inserted at the bottom and pressed in at the top – done!



Table of contents

RK ROSE+KRIEGER

Introduction

Choosing a system ..... p. 412
Safety distances ..... p. 414

Modular system

Function/Planning/Requirements ..... p. 416
Pillar ..... p. 418
Pillar profiles ..... p. 419
Supporting/Levelling shims ..... p. 419
Panels ..... p. 420
Hinged door ..... p. 423
Double-wing hinged door ..... p. 424
Sliding door ..... p. 425
Lifting door ..... p. 426
Modular profiles ..... p. 428

Accessories

Base clamp ..... p. 440
Fasteners ..... p. 441
Support ..... p. 441
Corner joint ..... p. 442
Connection element -S- (Click & Safe) ..... p. 444
Bracing plate ..... p. 446
Cover profile ..... p. 446
Profile seal ..... p. 447
Door gap seal ..... p. 447
Rim ..... p. 447
Hinges ..... p. 448
Piano hinge ..... p. 449
Ball catch ..... p. 450
Magnetic lock ..... p. 451
Magnet lock universal ..... p. 452
Ball catch universal ..... p. 453
Door stopper ..... p. 455
Handle ..... p. 455
Door lock -KL- ..... p. 456
Roller module ..... p. 458
Roller carriage module ..... p. 459
Safety switch ..... p. 460
Panels ..... p. 463

Choosing a system

Introduction

Due to the ever increasing automation of manufacturing processes and equipment, the protection of people from sources of danger is growing in importance. The safety guard has a grid design and therefore reduces the effort required from the user in planning, construction and assembly to a minimum.
It complies with the Machinery Directive 2006/42/EC.

A modern connector that meets the legal requirements for safety devices safely fixes post and safety guard element. Posts and safety guard elements come with all attachments on delivery, so safety guard elements can be installed without tools.
After the posts are secured to the substrate, the safety guard elements need only been inserted at the bottom and pressed in at the top – done!

RK Click & Safe Basic

No danger to personnel e.g. from plant or machinery
Partitioning system

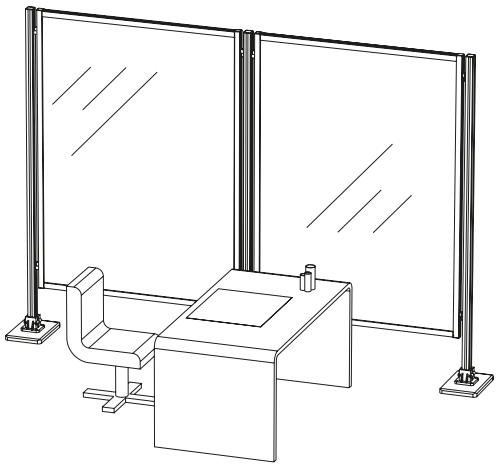

Safety guard to cordon off danger zones

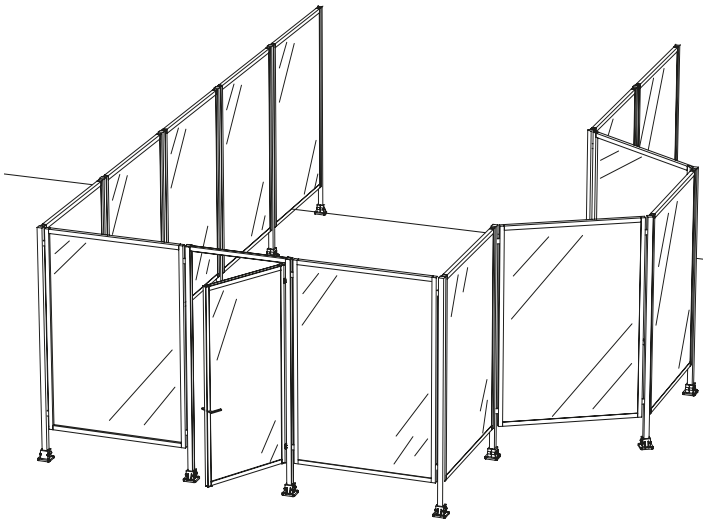

Upon request we immediate supply safety guards with standard DIN EN ISO 14120, annex C, e.g. collisions with persons (90 kg, 1,6 m/s, 115 J) or machine parts (robots). Compliance is determined and confirmed using the pendulum test method.
The test rig and the measuring process for the pendulum test has been inspected and approved by TÜV Süd.

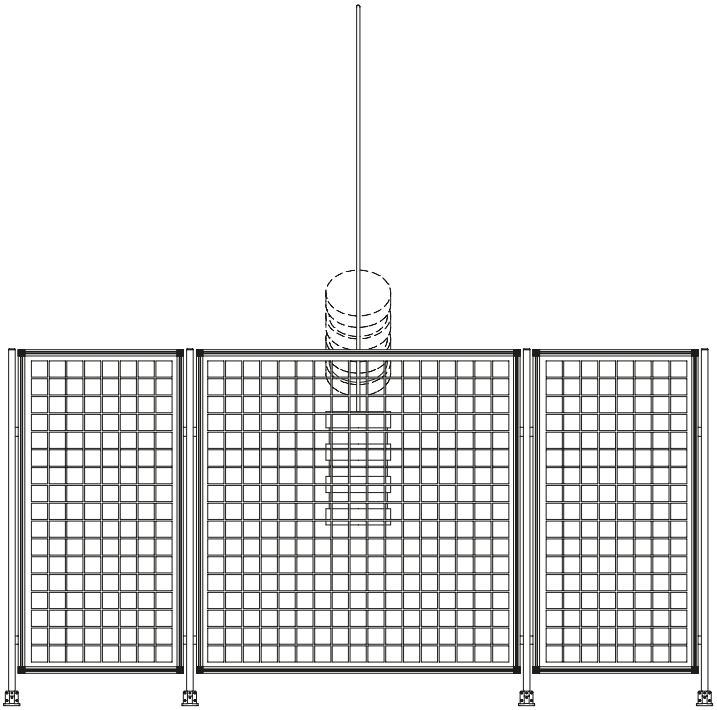

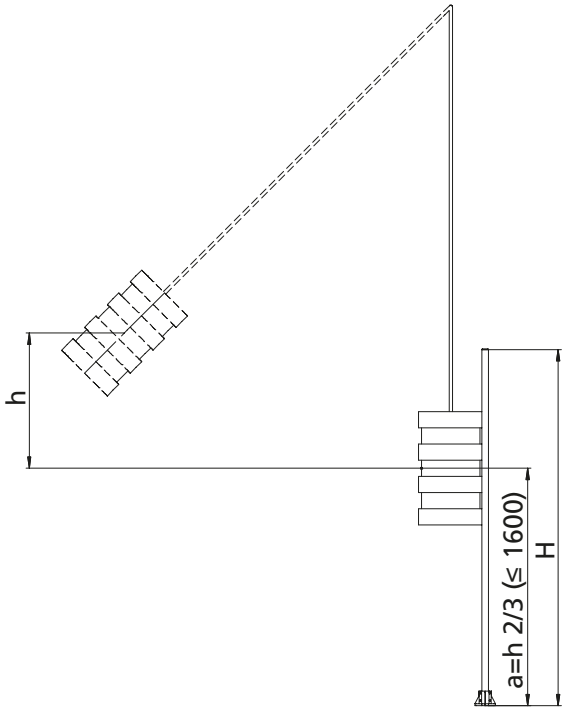

Legend:

H= Height of the guard
h= height of fall
a= Height of the point of impact, which must not exceed 1600 mm.

RK Click & Safe Protect 115

(Page 427)

Risks from moving parts

- Pendulum, standard ISO 14120, annex C, 5,8 km/h, 90 kg, normal walking speed

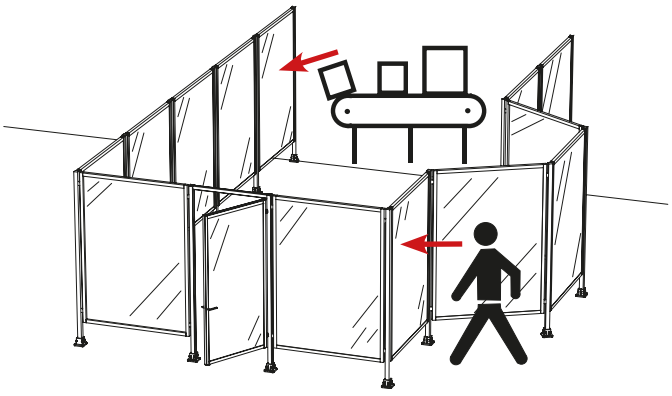

RK Click & Safe Protect 370

Risks from moving parts

- Pendulum, standard ISO 14120, annex C, 10 km/h, 90 kg, running speed

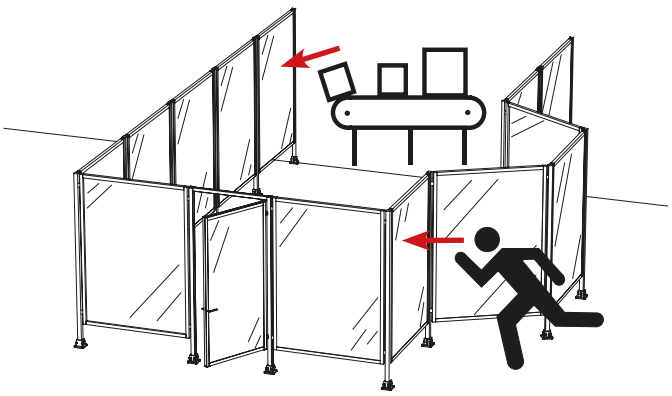

Safety distances

Safety distances

Distance from danger zone for frame height 2200 mm according to DIN EN ISO 13857 (upper limb, lower limb, full body access)

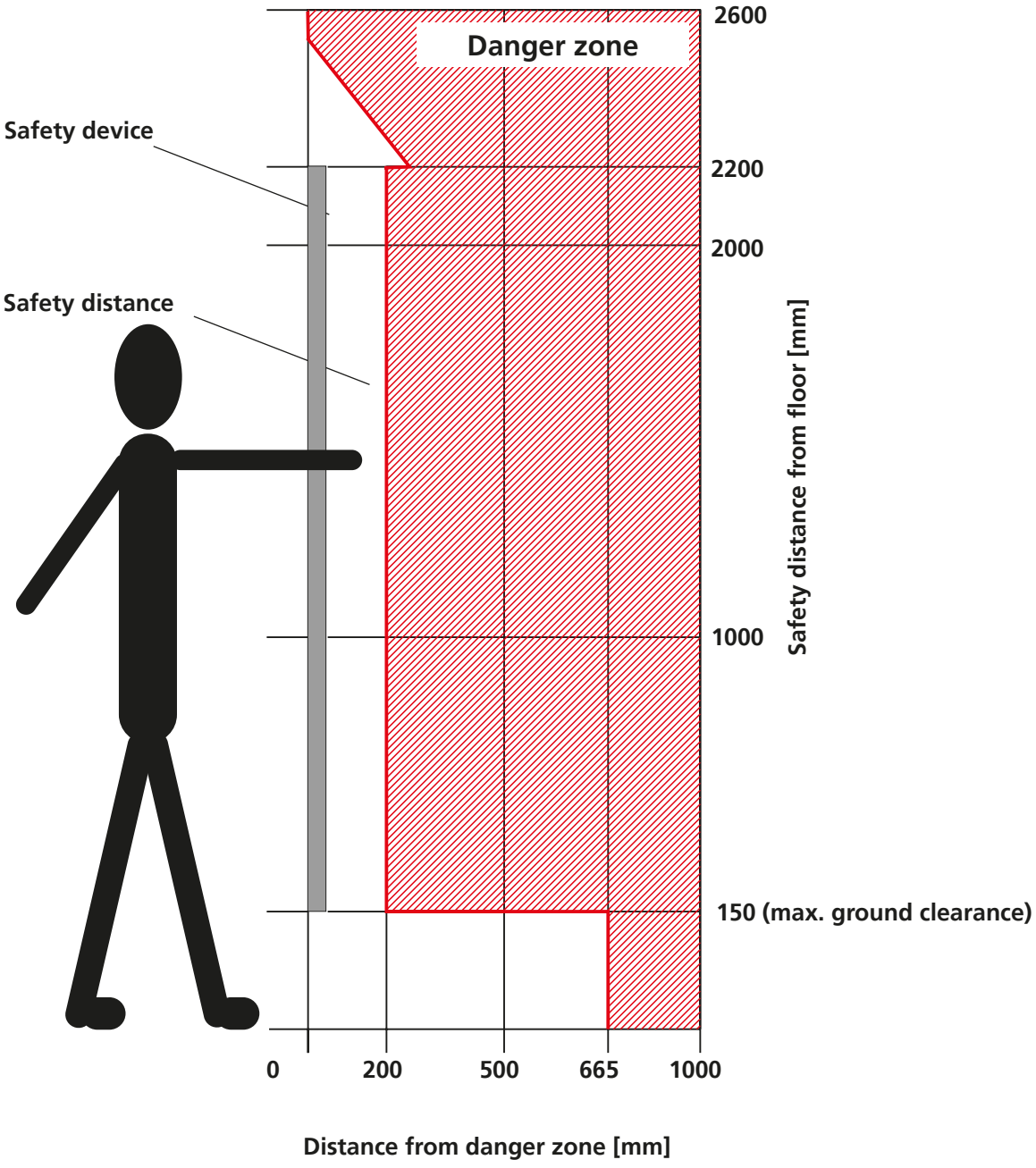

Distance from danger zone for frame height 1600 mm

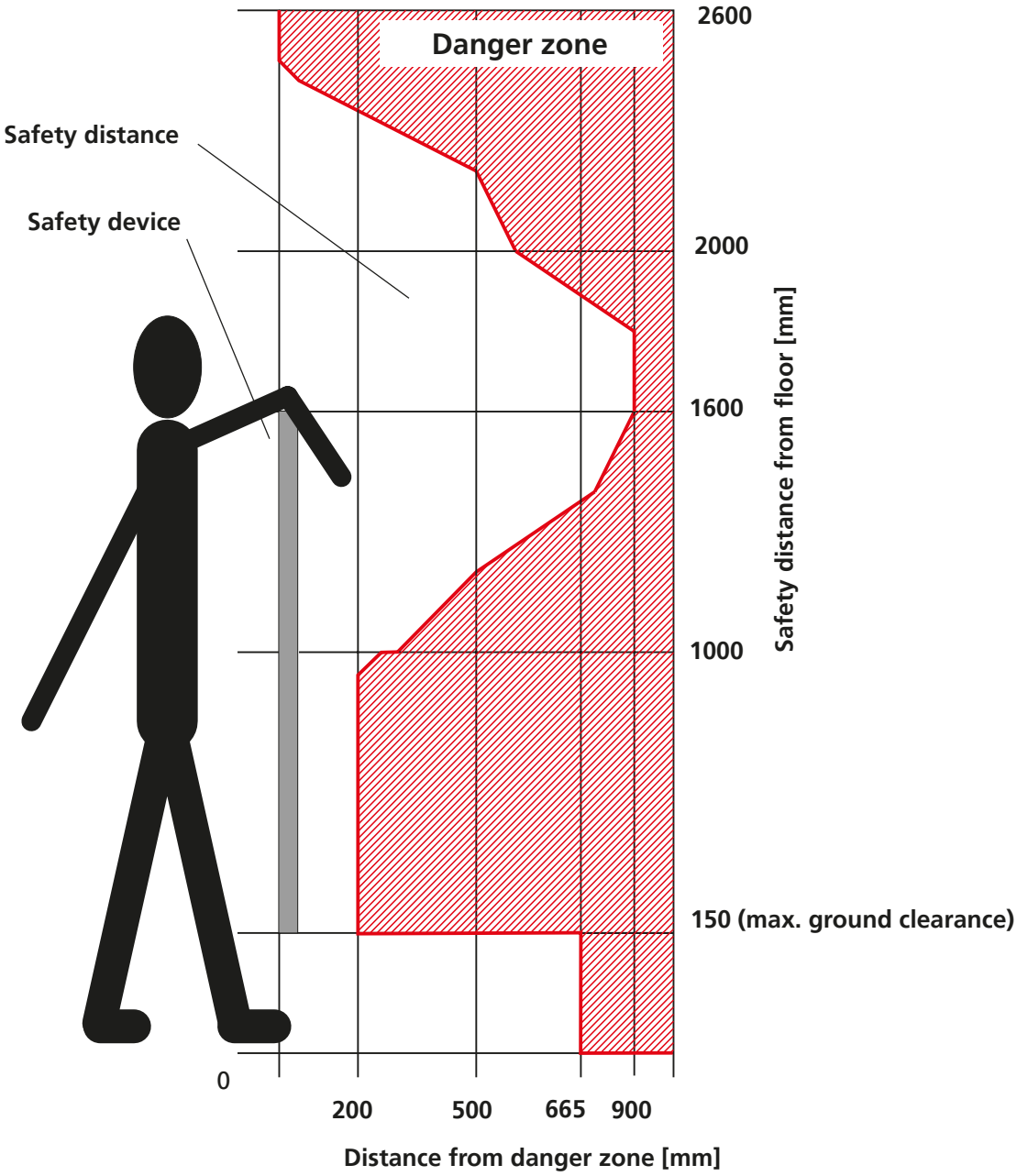

Modular system

The modular system

The modular system allows the user to concentrate on the most important thing – the safety function and its design with minimal time expenditure.

Features:

- Quick and easy on-site installation (with Click&Safe connection element, see page 444)
- Fast assembly and dismantling of individual frames, e.g. for maintenance work on the machine
- Frames with the same module size are interchangeable

Clamping or inserting profile available in the cross-sections 30 mm and 40 mm.
(see page 431–436)

Pillar profile 50, S-profile 40x40 or F-profile 50x50
(see page 418–419
Page 438–439)

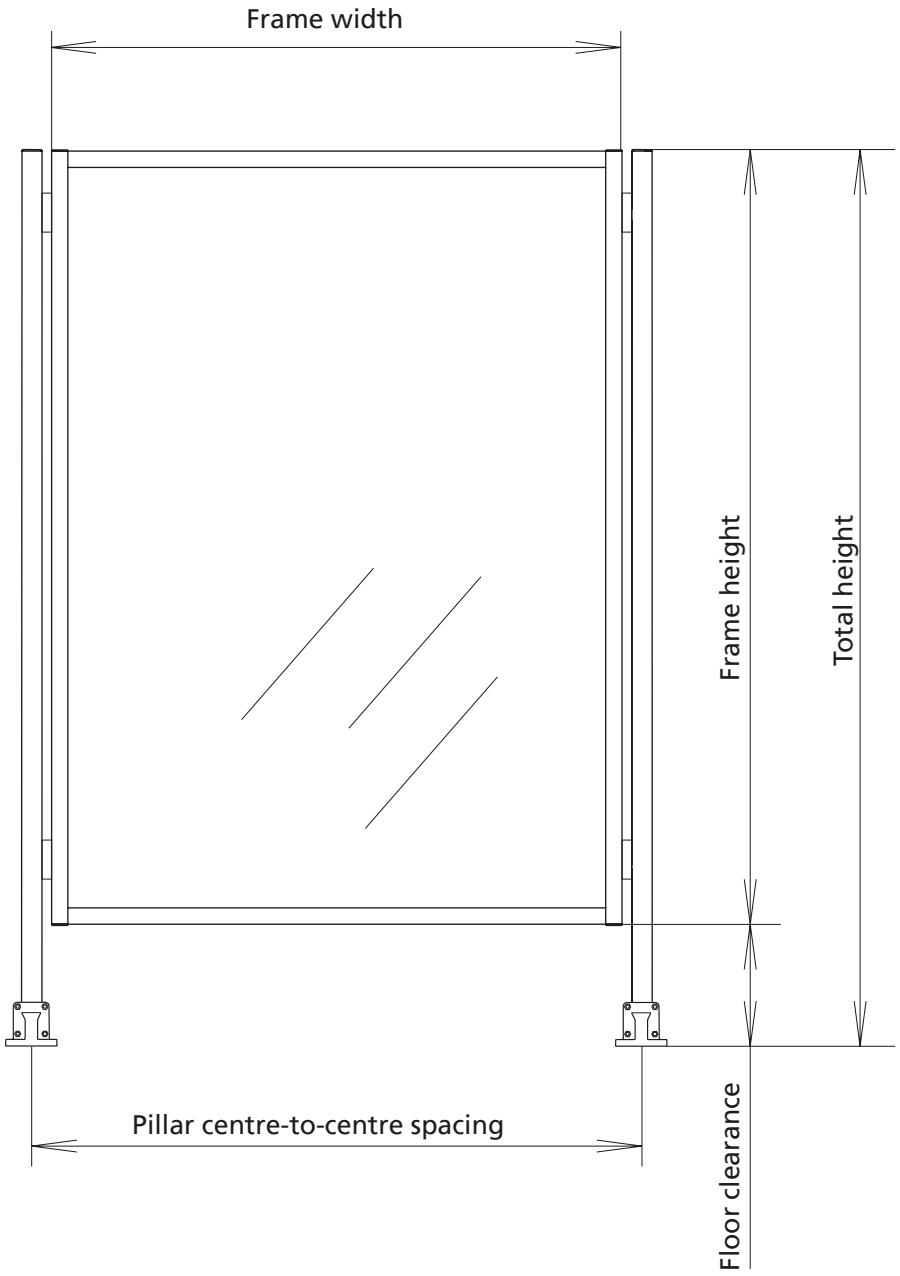

Procedure

1. Planning

a) Calculate the required lengths

Example:
The machine to be protected has the dimensions 5.50 m x 3.50 m. Allowing for the safety distance, you get a rectangle of approx. 6 m x 4 m.

b) The protection system can now be designed in line with requirements with the aid of the different module sizes.
In our example, one solution is as follows:
4 m side = 2 x 2.0 m module
6 m side = 4 x 1.5 m module
Number of pillars = 12

Plan view

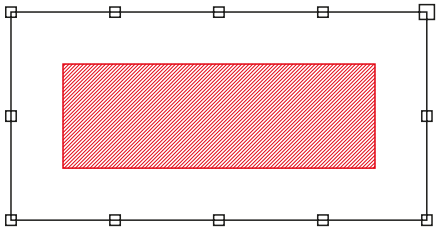

Pillar **Frame in modular system**

2. Material requirements

a) Pages 420–422 list the different frame versions with different panels.
b) Furthermore, sliding, hinged and lifting doors are available, which are also configured in the modular system (page 416).

c) Page 418 shows the pillars. The following distinction must be made in relation to the pillars:

- Protection system = pillar with base clamp (type 1 and 2)
- Safety guard = pillar with base plate (type 3)

Pillar



Frame



Panel

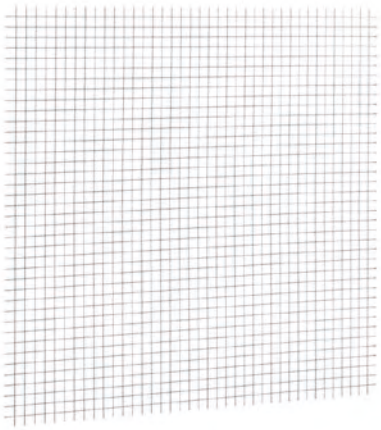

Modular system

Pillar

Application:

- Consisting of pillar profile 50 / S-profile 40x40 / F-profile 50x50
- Choice of base versions





Type 1 (FVV)

For pillar profile S-40x40

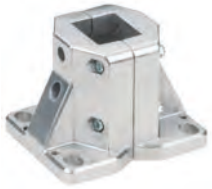

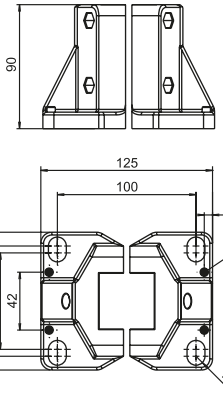

For pillar profile 50, F-50x50



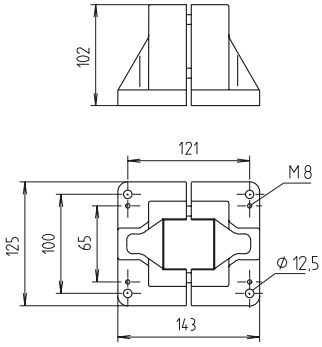

Type 2 (FVA)

For pillar profile 50, F-50x50



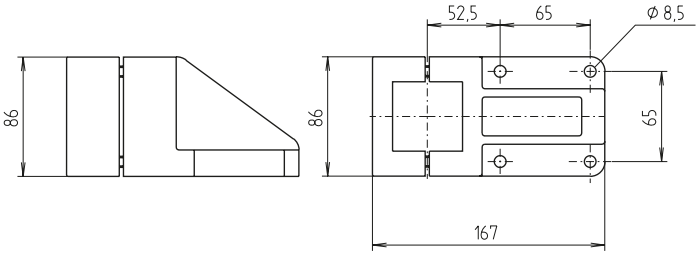

Type 3 (FP)

For pillar profile 50, F-50x50, S-40x40



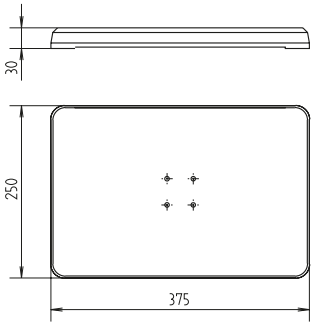



Pillar profile S-40x40



Pillar profile F-50x50

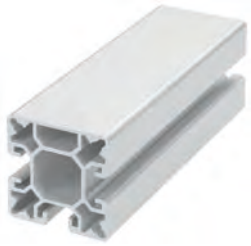

Pillar profile SP-50x50

Order example: Pillar F-50 1600 0000 X

Pillar profile F-50,
Height = 1600,
Version = Type 1 (FVV)

Pillar profile	Tall pillar (max. 6000 mm)	Base version
S-40x40	_ _ _ _ 0000	_
F-50x50	_ _ _ _ 0000	_
SP-50x50	_ _ _ _ 0000	_

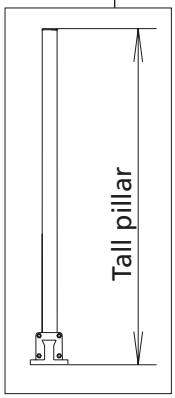

X = type 1 (FVV)
Y = type 2 (FVA, not available for F-40)
Z = type 3 (FP)

Supporting/Levelling shims

- For levelling with the aid of set screws
- For preventing the set screws from digging into the floor
- Give the base clamp a full contact surface

Material:
Supporting shim galvanised steel, levelling shim aluminium





Code No.	Version	Base version	Includes
4080500	Supporting shim 50	Type 1 for pillar profile 50, F-50x50	1 1-mm shim
40143011	Levelling shims 40	Type 1 for pillar profile S-40x40	4 1-mm shims, 1 0.5-mm shim
40143021	Levelling shims 50	Type 1 for pillar profile F-50x50	4 1-mm shims, 1 0.5-mm shim

Modular system

Panel module version -A-

- Consisting of frame, panels and connection elements



+

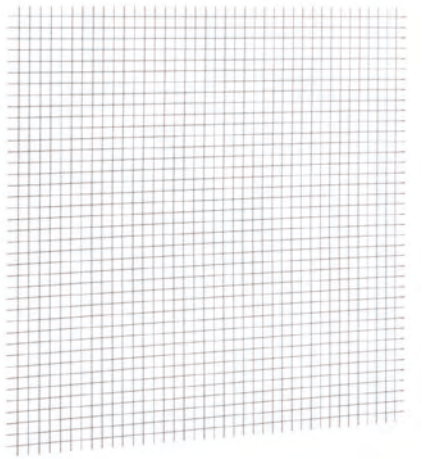

Frame profile, see p. 19-21	Frame height	Frame width	Choice of panels
Module A, ESP 30x30	Up to 2000 mm	Up to 1000 mm	A, G
Module A, ESP 40x40	Up to 2000 mm	Up to 1500 mm	A, I
Module A, ESP 30x30/2	Up to 2000 mm	Up to 1000 mm	A, G
Module A, ESP 40x40/2	Up to 2000 mm	Up to 1500 mm	A, I
Module A, KL 30x30-3	Up to 2000 mm	Up to 1000 mm	All
Module A, KL 40x40-3	Up to 2000 mm	Up to 2000 mm	A, B, C, D
Module A, KL 40x40-3	Up to 2000 mm	Up to 1500 mm	All

A = Without panel
B = Acrylic glass, 6 mm, clear
C = Acrylic glass, 6 mm, tinted
D = Makrolon glass, 6 mm, clear
E = Trespa, 6 m
F = Composite, 6 mm, anodised,
G = Wire mesh, 30x30x3, galv. steel
I = Wire mesh, 40x40x4, galv. steel

Further versions available on request.

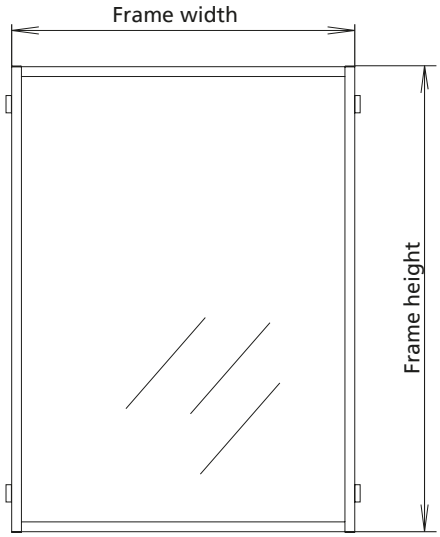

Order example:
Module A, ESP 30 1500 0900 G

Frame profile ESP 30x30,
Height=1500,
Width=900,
Panel = wire mesh 30x30x3 galv. steel

RK ROSE+KRIEGER

Panel module version -B-

- Consisting of frame, panels and connection elements, vertical division (in centre)



+

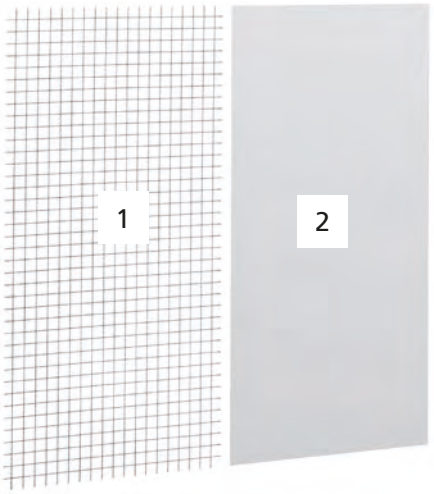

Frame profile, see p. 431-433	Frame height	Frame width	Panel 1 Choice of:	Panel 2 Choice of:
Module B, ESP 30	Up to 2000 mm	Up to 1500 mm	A, G	A, G
Module B, ESP 40	Up to 2500 mm	Up to 2000 mm	A, I	A, I
Module B, ESP 30/2	Up to 2000 mm	Up to 1500 mm	A, G	A, G
Module B, ESP 40/2	Up to 2500 mm	Up to 2000 mm	A, I	A, I
Module B, KL 30x30-3	Up to 2000 mm	Up to 1500 mm	All	All
Module B, KL 40x40-4	Up to 2500 mm	Up to 2000 mm	All	All

A = Without panel
B = Acrylic glass, 6 mm, clear
C = Acrylic glass, 6 mm, tinted
D = Makrolon glass, 6 mm, clear
E = Trespa, 6 mm, brown solid core panel available in widths up to 1500 mm
F = Composite, 6 mm, anodised, available in widths up to 1500 mm
G = Wire mesh, 30x30x3, galv. steel, available in widths up to 1500 mm
I = Wire mesh, 40x40x4, galv. steel, available in widths up to 1500 mm

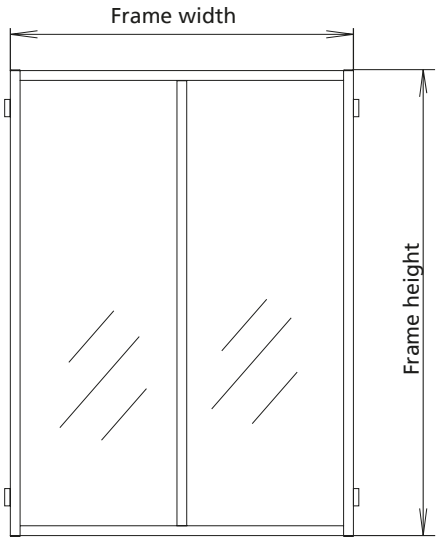

Further versions available on request.

Order example:
Module B, KL 40 2000 1200 BI

Frame profile KL 40x40-3
Height = 2000,
Width = 1200,
Panel 1 = Acrylic glass, 6 mm, clear
Panel 2 = wire mesh 40x40x4 galv. steel

Modular system

Panel module version -C-

- Consisting of frame, panels and connection elements, horizontal division (in centre)



+

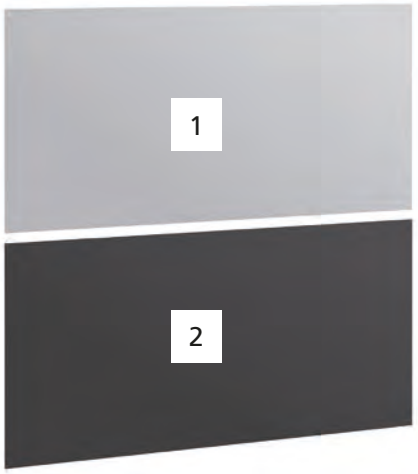

Frame profile, see p. 431 - 433	Frame height	Frame width	Panel 1 Choice of:	Panel 2 Choice of:
Module C, ESP 30	Up to 2000 mm	Up to 1500 mm	A, G	A, G
Module C, ESP 40	Up to 2500 mm	Up to 2000 mm	A, I	A, I
Module C, ESP 30/2	Up to 2000 mm	Up to 1500 mm	A, G	A, G
Module C, ESP 40/2	Up to 2500 mm	Up to 2000 mm	A, I	A, I
Module C, KL 30x30-3	Up to 2000 mm	Up to 1500 mm	All	All
Module C, KL 40x40-3	Up to 2500 mm	Up to 2000 mm	All	All

A = Without panel
B = Acrylic glass, 6 mm, clear
C = Acrylic glass, 6 mm, tinted
D = Makrolon glass, 6 mm, clear
E = Trespa, 6 mm, brown solid core panel available in widths up to 1500 mm
F = Composite, 6 mm, anodised, available in widths up to 1500 mm
G = Wire mesh, 30x30x3, galv. steel
I = Wire mesh, 40x40x4, galv. steel

Further versions available on request.

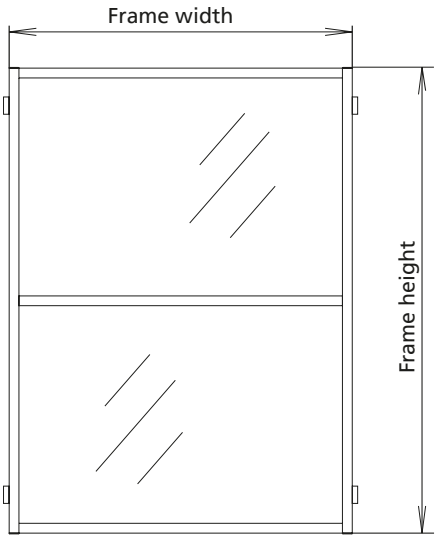

Order example:
Module C, KL 40 2000 0850 BI

Frame profile KL 40x40-3,
Height = 2000,
Width = 850,
Panel 1 = Acrylic glass, 6 mm, clear
Panel 2 = wire mesh 40x40x4 galv. steel

RK ROSE+KRIEGER

Hinged door

- Consisting of pillar profile 50 with base version type 1, top cross strut
- Choice of door lock

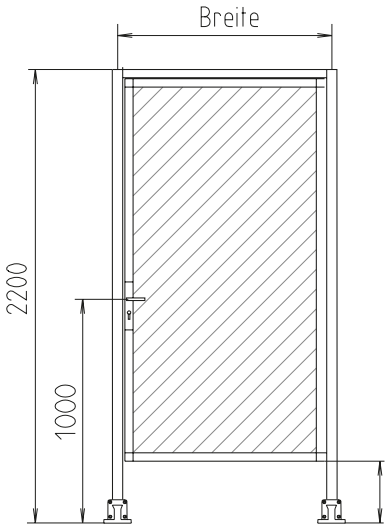

Please indicate floor clearance in the order



Version DIN right

Type	Mounting	Height	Width	Panel	Door lock	Frame profile
Hinged door	_	_ _ _ _	_ _ _ _	_	_	KL 30x30-3
	_	_ _ _ _	_ _ _ _	_	_	KL 40x40-3

W = Panic lock
X = Cylinder lock with handle set
Y = Magnetic lock with handle
Z = Ball catch with handle

A = Without panel
B = Acrylic glass, 6 mm, clear
C = Acrylic glass, 6 mm, tinted
D = Makrolon glass, 6 mm, clear
E = Trespa, 6 mm, brown solid core panel available in widths up to 1500 mm
F = Composite, 6 mm, anodised, available in widths up to 1500 mm
G = Wire mesh, 30x30x3, galv. steel
I = Wire mesh, 40x40x4, galv. steel

F = DIN right mounting
G = DIN left mounting

Standard height:
2200 = 2200 mm

Standard width:
0800 = 0800 mm
1000 = 1000 mm

Further widths/heights available on request.

Order example:
Hinged door F 2200 1000 DY
DIN right,
Height = 2200,
Width = 1000,
Panel = Makrolon,
Door lock = Magnetic lock

Modular system

Double-winged hinged door

- Consisting of pillar profile 50 with base version type 1, top cross strut
- Choice of door lock
- Pillar roller available as an optional extra

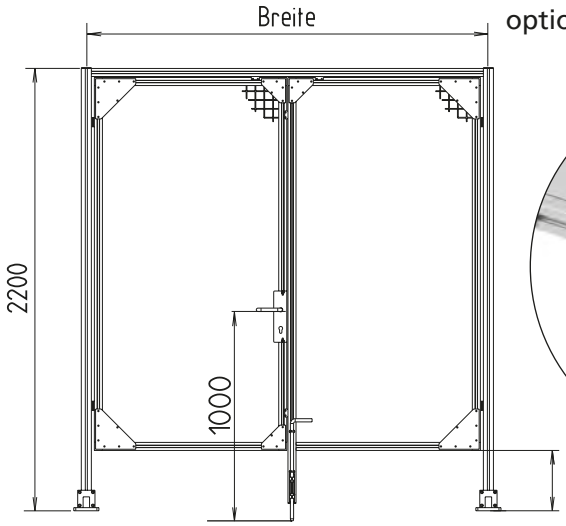

Please indicate floor clearance in the order

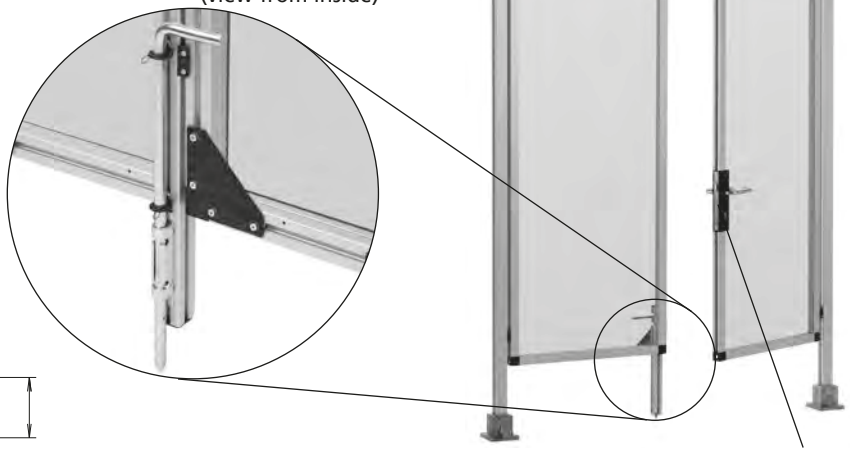

Version
DIN right

Fixed knob on outside in panic lock version

Type	Mounting	Height	Width	Panel	Door lock	Frame profile
Double-wing hinged door	_	_ _ _ _	_ _ _ _	_	_	KL 40x40-3

W = Panic lock
X = Cylinder lock with handle set
Y = Magnetic lock with handle
Z = Ball catch with handle

L = DIN right mounting
M = DIN left mounting

Standard height:
2200 = 2200 mm

Standard width:
1500 = 1500 mm
2000 = 2000 mm

Further widths/heights available on request.

A = Without panel
B = Acrylic glass, 6 mm, clear
C = Acrylic glass, 6 mm, tinted
D = Makrolon glass, 6 mm, clear
E = Trespa, 6 mm, brown solid core panel available in widths up to 1500 mm
F = Composite, 6 mm, anodised, available in widths up to 1500 mm
G = Wire mesh, 30x30x3, galv. steel
I = Wire mesh, 40x40x4, galv. steel

Order example:
Double-wing hinged door L 2200 1500 DW
DIN right,
Height = 2200,
Width = 1500,
Panel = Makrolon,
Door lock = panic lock

Cane bolt for double-winged hinged door

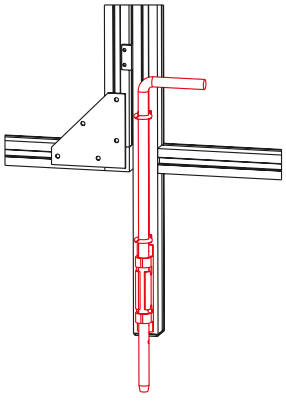

Material: galvanised steel.
Includes:
Complete with fixing set.

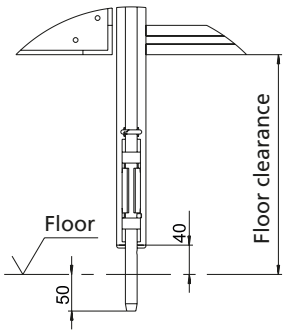

Code No.	Type
95208	Cane bolt for double-winged hinged door

RK Click & Safe Basic

Sliding door

- Consisting of pillar profil 50 with base version type 1
- Guide with sliding door profile 40 and roller carriage

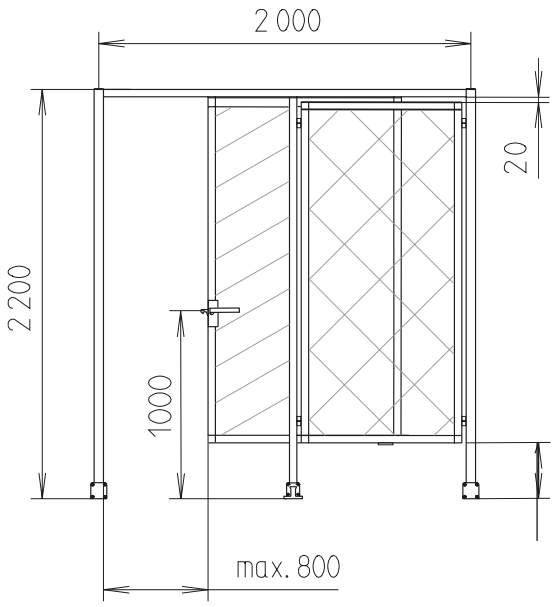

Please indicate floor clearance in the order

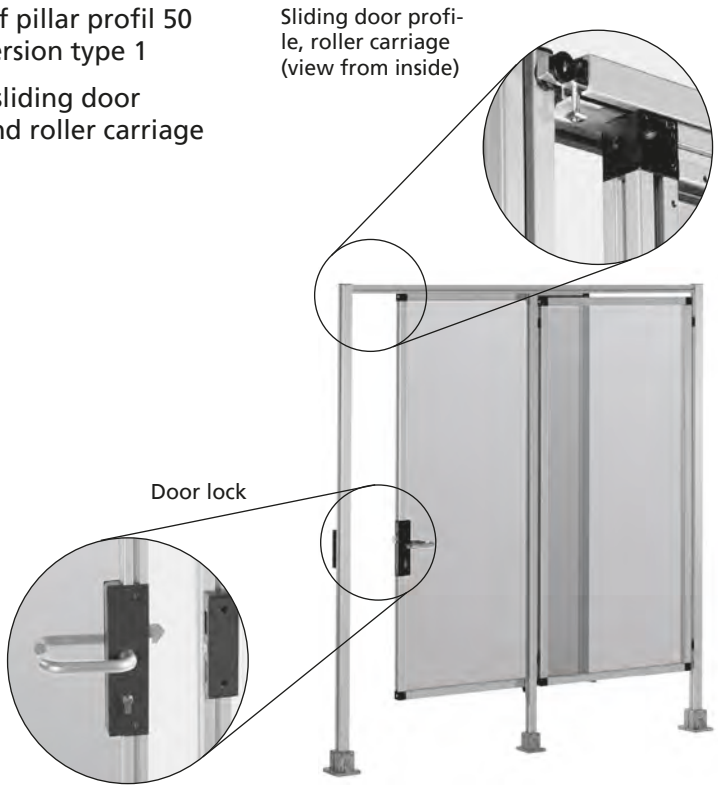

Version
DIN right

Type	Mounting	Height	Width	Panel	Frame profile
Sliding door	_	_ _ _ _	_ _ _ _	_	KL 40x40-3

N = DIN right mounting
P = DIN left mounting

Standard height:
2200 = 2200 mm

Standard width:
2000 = 2000 mm

Further widths/heights available on request.

A = Without panel
B = Acrylic glass, 6 mm, clear
C = Acrylic glass, 6 mm, tinted
D = Makrolon glass, 6 mm, clear
E = Trespa, 6 mm, brown solid core panel available in widths up to 1500 mm
F = Composite, 6 mm, anodised, available in widths up to 1500 mm
G = Wire mesh, 30x30x3, galv. steel
I = Wire mesh, 40x40x4, galv. steel

Order example:
Sliding door N 2200 2000 IB

Sliding door right,
Height = 2200,
Width = 2000,
Panel1 = Wire mesh,
Panel2 = Clear acrylic

Modular system

Lifting door

- Consisting of pillar profile F-profile 80-L with base version type 1
- Incl. pulleys, counterweights and infinitely adjustable brake

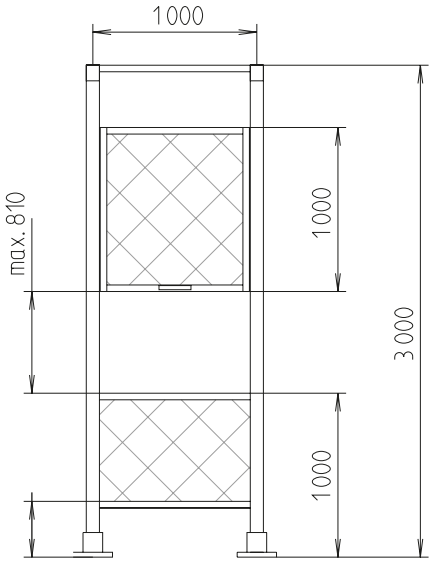

Please indicate floor clearance in the order

Door limiter with shock absorbers, counterweight pulley system

Infinitely adjustable holding brake in handle

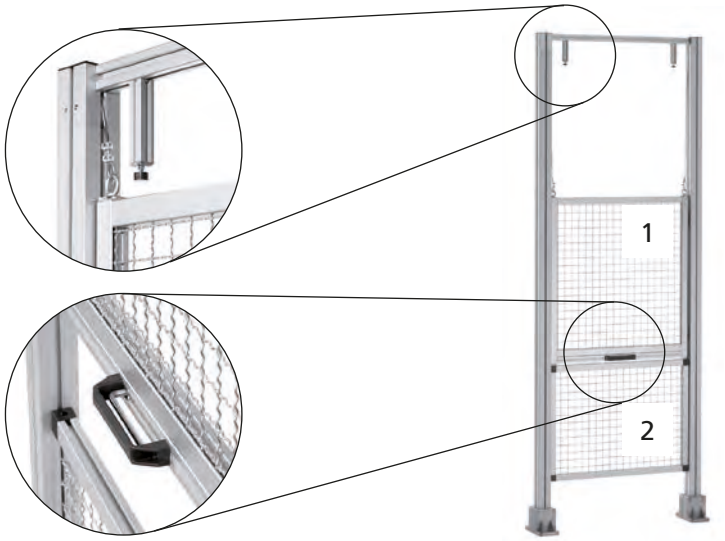

Type	Height	Width	Panel		Frame profile
			1	2	
Lifting door	_ _ _ _	_ _ _ _	_	_	KL 40x40-3

Standard height: 3000 = 3000 mm

Standard width: 1000 = 1000 mm

Further widths/heights available on request.

A = Without panel
B = Acrylic glass, 6 mm, clear
C = Acrylic glass, 6 mm, tinted
D = Makrolon glass, 6 mm, clear
E = Trespa, 6 mm, brown solid core panel available in widths up to 1500 mm
F = Composite, 6 mm, anodised, available in widths up to 1500 mm
G = Wire mesh, 30x30x3, galv. steel
I = Wire mesh, 40x40x4, galv. steel

Order example:
Lifting door 3000 1000 BE

Frame profile = KL 40-II
Height = 3000
Width = 1000
Panel 1 = Clear acrylic
Panel 2 = Trespa

RK Click & Safe Protect 115

Risks from moving parts

- Pendulum, standard ISO 14120, annex C 115 j (5,8 km/h, 90 kg) normal walking speed

The test rig and the measuring process for the pendulum test has been inspected and approved by TÜV Süd.

Panel module version -A-

- Consisting of frame, panels and connection elements



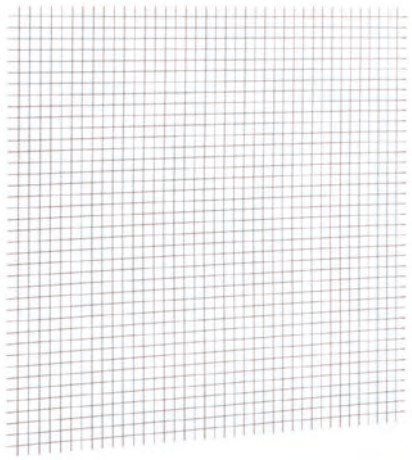

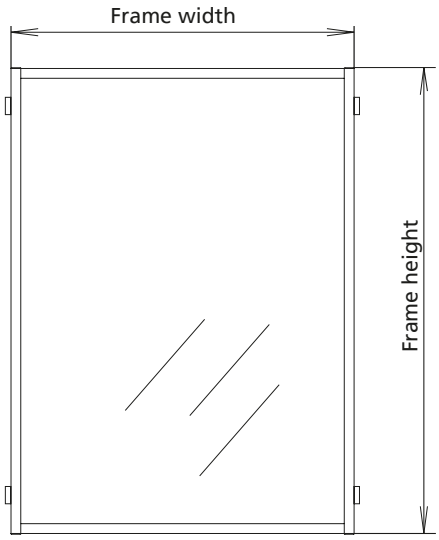

Pillar profile p. 438	Frame profile p. 432	Frame height	Frame width	Panels
S-40x40	ESP 30x30 (30/2)	2000 mm	1000 mm	Wire mesh, 30x30x3
S-40x40	ESP 40x40 (40/2)	2000 mm	1000 mm	Wire mesh, 40x40x4
S-40x40	KL 30x30	2000 mm	1500 mm	Wire mesh, 30x30x3
S-40x40	KL 40x40	2000 mm	1500 mm	Wire mesh, 40x40x4
S-40x40	KL 40x40	2000 mm	1500 mm	Wire mesh, 30x30x3
S-40x40	KL 30x30	2000 mm	1500 mm	Makrolon glass 4 mm
S-40x40	KL 30x30	2000 mm	1500 mm	Makrolon glass 6 mm
S-40x40	KL 40x40	2000 mm	1500 mm	Makrolon glass 4 mm
S-40x40	KL 40x40	2000 mm	1500 mm	Makrolon glass 6 mm
F-50x50	KL 40x40	2000 mm	1500 mm	Makrolon glass 4 mm
S-40x40	KL 40x40	2000 mm	1500 mm	Safety glass VSG 6 mm
S-40x40	KL 30x30	2000 mm	1000 mm	Wire mesh, 30x30x3
S-40x40	KL 40x40	2000 mm	1000 mm	Wire mesh, 40x40x4
F-50x50	KL 40x40	2000 mm	1000 mm	Safety glass VSG 6 mm

Other combinations on request

System profiles

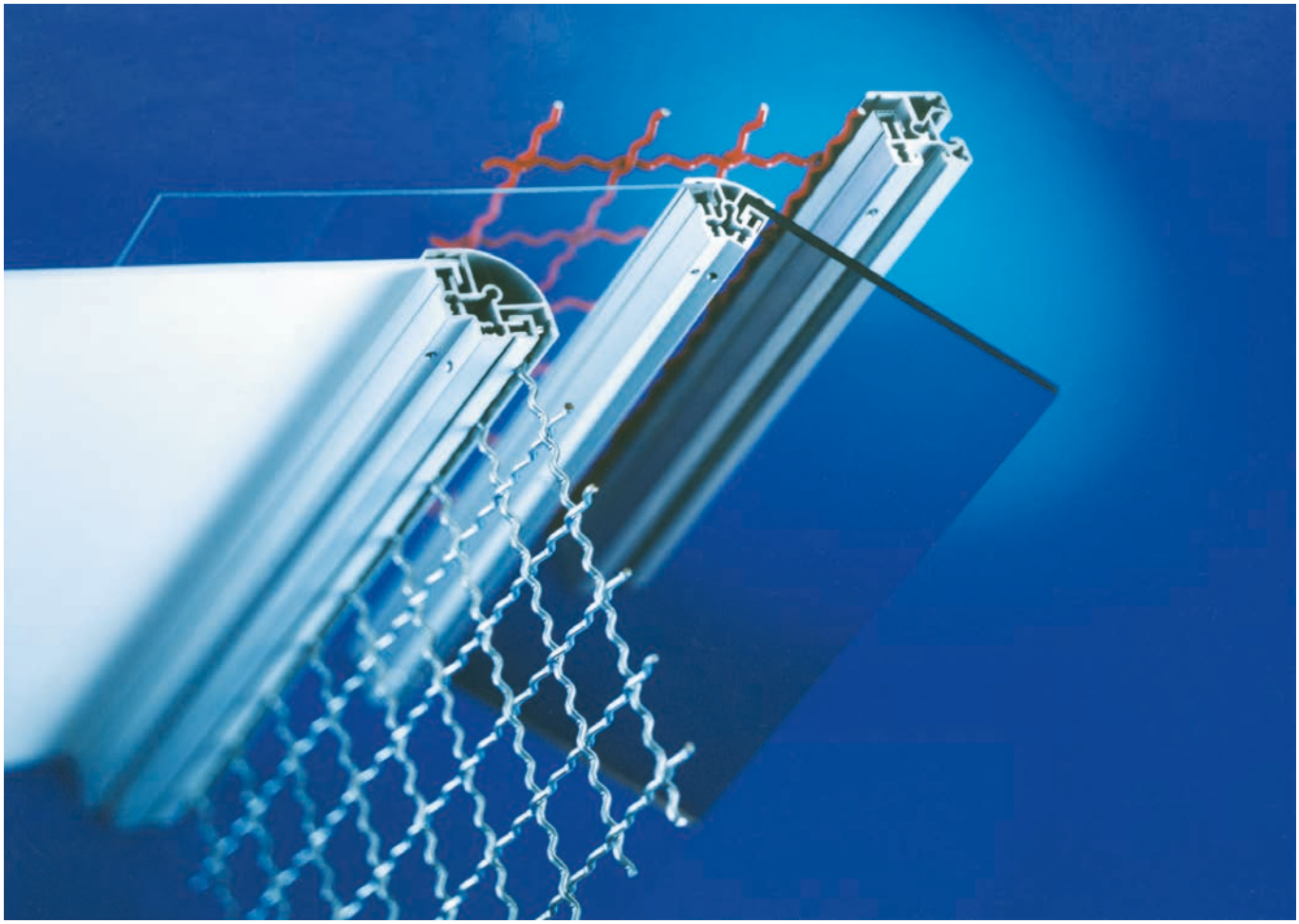

Inserting profiles ESP for wire mesh

Features:

- Special profile for inserting wire meshes (size 30 for 30x30x3, size 40 for 40x40x4,
- Type ESP 30/2 (40) and ESPD 30x40 (40) for 40x40x4)
- Visually attactive and easy to clean thanks to profile visible surfaces without longitudinal slot.
- Corner joint ensures quick and rotation-locked assembly
- High stability thanks to high insertion depth

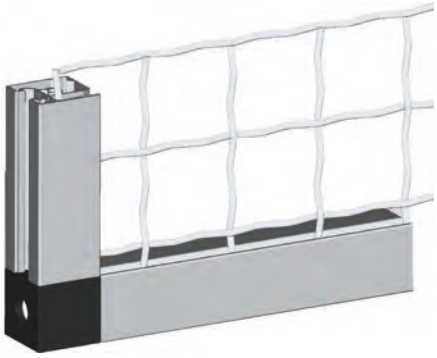

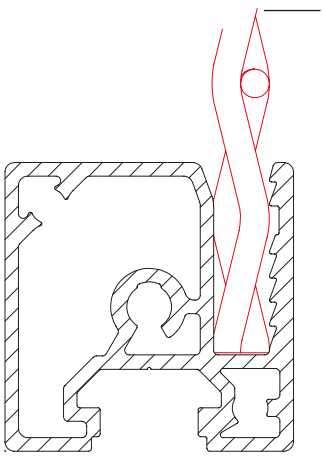

Clamping profiles

- A clamping screw presses the clamping bar against the panel. This ensures secure seating and tolerances can be absorbed by the panels without any difficulty.

Features:

- Secure seating, no flapping because the panels are clamped
- Visually attractive and easy to clean thanks to smooth visible surface
- Various angle versions for different applications
- Suitable for panel elements with a wall thickness of up to 10 mm
- Panel depth allowances on all sides:
  Size 30 +10 mm
  Size 40 +15 mm

Includes:
Basic profile, clamping bar and set screws (hole spacing approx. 200 mm)

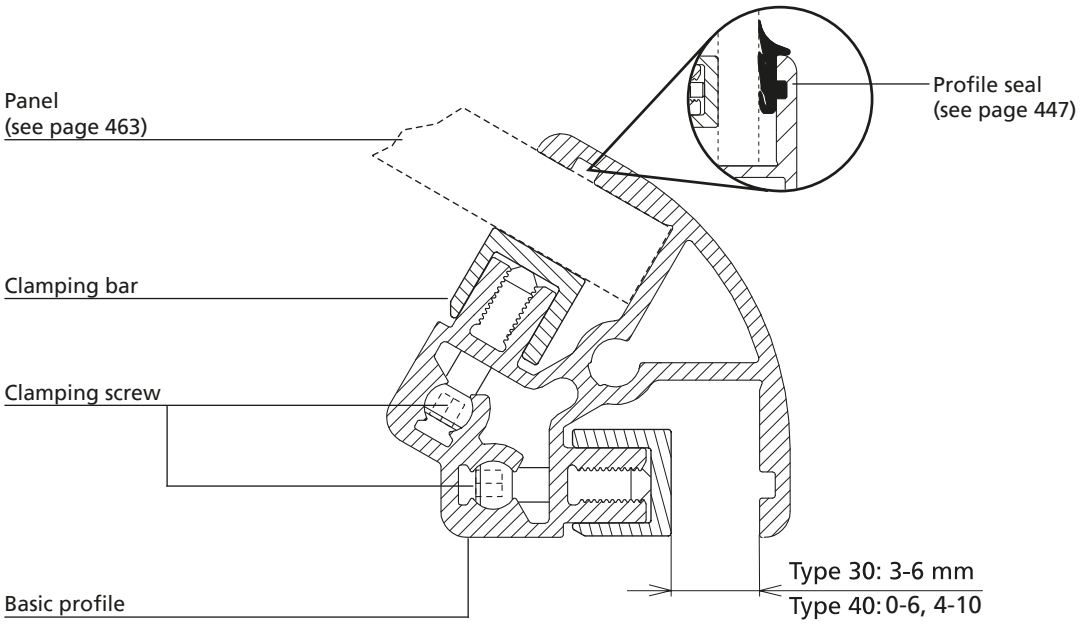

Profiles

Inserting profile ESP for wire mesh



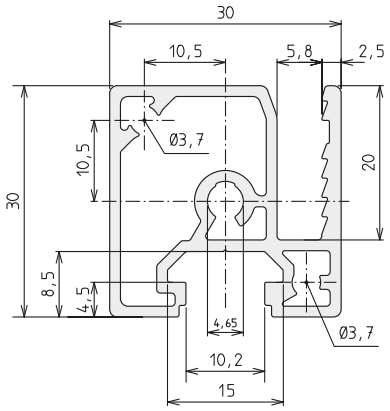

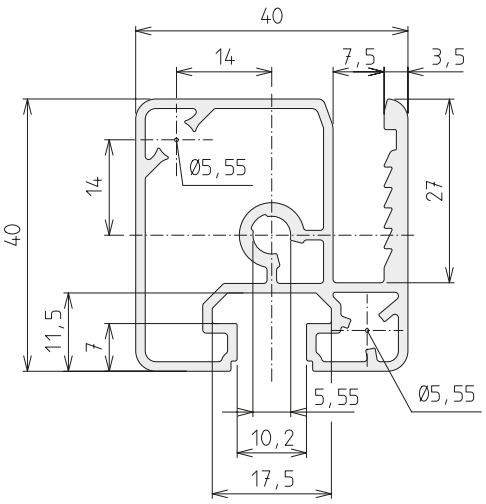

Code No.	Size	Version	For wire mesh	Anodised
4895000	30	Cut to size (max. 6000 mm)	30x30x3	Clear
4895001	30	6000 mm bar	30x30x3	Clear
4905000	40	Cut to size (max. 6000 mm)	40x40x4	Clear
4905001	40	6000 mm bar	40x40x4	Clear

Inserting profile ESP/2 for wire mesh



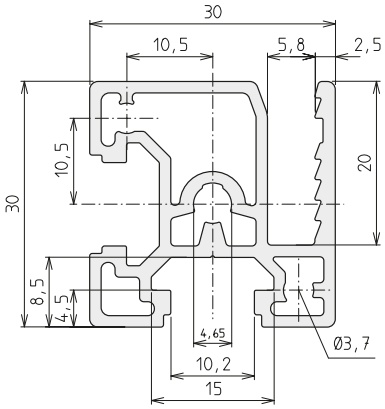

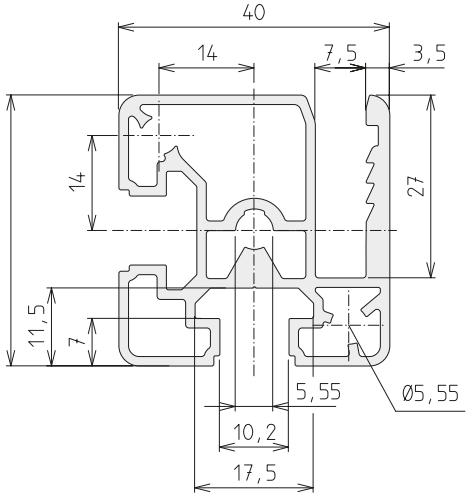

Code No.	Size	Version	For wire mesh	Anodised
4935000	30	Cut to size (max. 6000 mm)	30x30x3	Clear
4935001	30	6000 mm bar	30x30x3	Clear
4945000	40	Cut to size (max. 6000 mm)	40x40x4	Clear
4945001	40	6000 mm bar	40x40x4	Clear

Profiles

Clamping profile KL



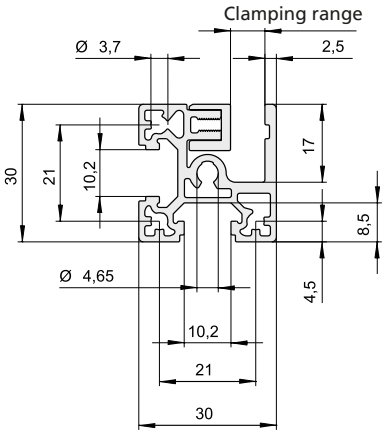

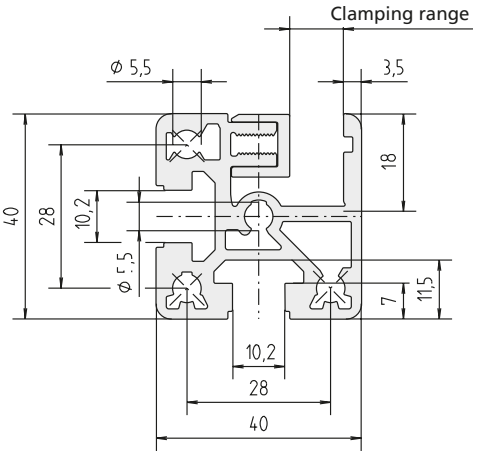

Code No.	Size	Version	Clamping range	Anodised
4F75008	30	Cut to size (max. 6000 mm)	3 - 6 mm	Clear
4F75009	30	6000 mm bar	3 - 6 mm	Clear
4B95100	40	Cut to size (max. 6000 mm)	0 - 6 mm	Clear
4B95101	40	6000 mm bar	0 - 6 mm	Clear
4B95008	40	Cut to size (max. 6000 mm)	4 - 10 mm	Clear
4B95009	40	6000 mm bar	4 - 10 mm	Clear

Clamping profile KLD



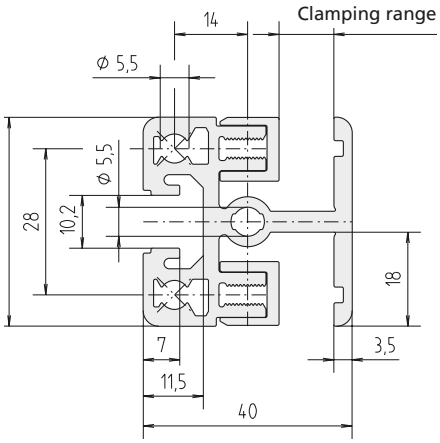

Code No.	Size	Version	Clamping range	Anodised
4615100	40	Cut to size (max. 6000 mm)	0 - 6 mm	Clear
4615101	40	6000 mm bar	0 - 6 mm	Clear
4615008	40	Cut to size (max. 6000 mm)	4 - 10 mm	Clear
4615009	40	6000 mm bar	4 - 10 mm	Clear

Clamping profile KLD



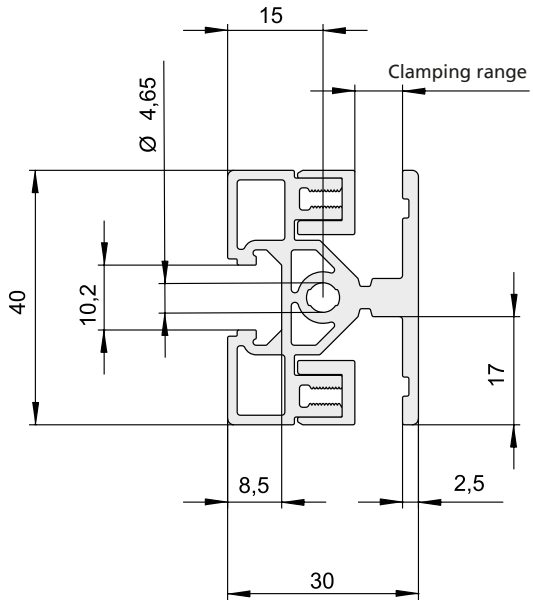

Code No.	Size	Version	Clamping range	Anodised
4F85008	30x40	Cut to size (max. 6000 mm)	3 - 6 mm	Clear
4F85009	30x40	6000 mm bar	3 - 6 mm	Clear

Clamping profile KLE



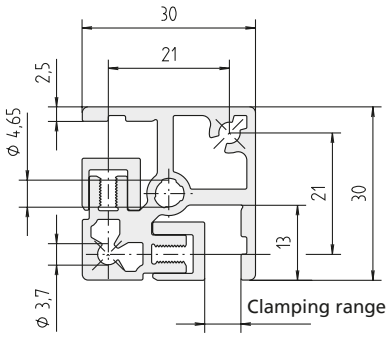

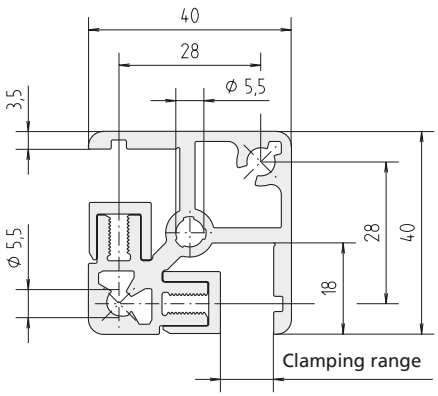

Code No.	Size	Version	Clamping range	Anodised
4705008	30	Cut to size (max. 6000 mm)	3 - 6 mm	Clear
4705009	30	6000 mm bar	3 - 6 mm	Clear
4715100	40	Cut to size (max. 6000 mm)	0 - 6 mm	Clear
4715101	40	6000 mm bar	0 - 6 mm	Clear
4715008	40	Cut to size (max. 6000 mm)	4 - 10 mm	Clear
4715009	40	6000 mm bar	4 - 10 mm	Clear

Profiles



Clamping profile KLW-15



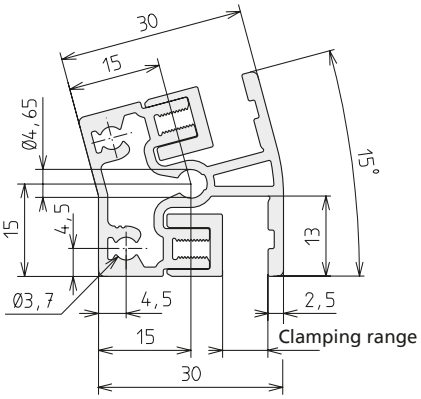

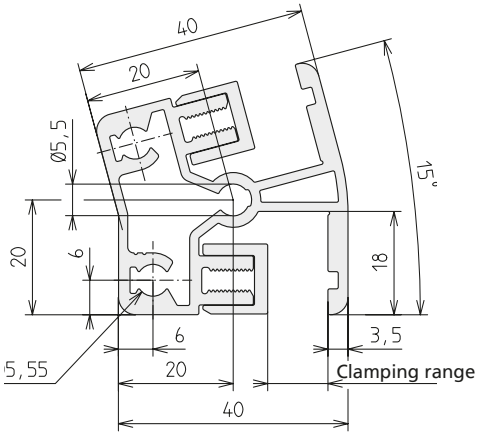

Code No.	Size	Version	Clamping range	Anodised
4405000	30	Cut to size (max. 6000 mm)	3 - 6 mm	Clear
4405001	30	6000 mm bar	3 - 6 mm	Clear
4455100	40	Cut to size (max. 6000 mm)	0 - 6 mm	Clear
4455101	40	6000 mm bar	0 - 6 mm	Clear
4455000	40	Cut to size (max. 6000 mm)	4 - 10 mm	Clear
4455001	40	6000 mm bar	4 - 10 mm	Clear

Clamping profile KLW-30



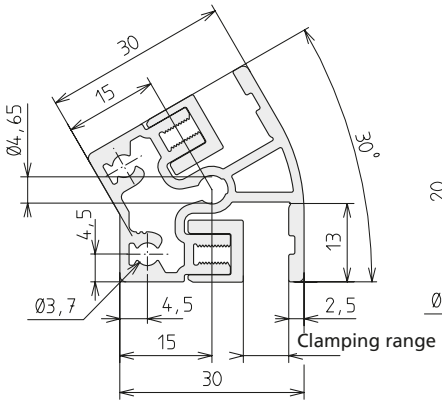

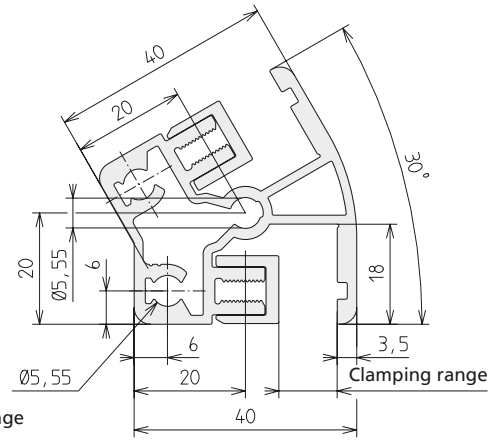

Code No.	Size	Version	Clamping range	Anodised
4415000	30	Cut to size (max. 6000 mm)	3 - 6 mm	Clear
4415001	30	6000 mm bar	3 - 6 mm	Clear
4465100	40	Cut to size (max. 6000 mm)	0 - 6 mm	Clear
4465101	40	6000 mm bar	0 - 6 mm	Clear
4465000	40	Cut to size (max. 6000 mm)	4 - 10 mm	Clear
4465001	40	6000 mm bar	4 - 10 mm	Clear

Clamping profile KLW-45



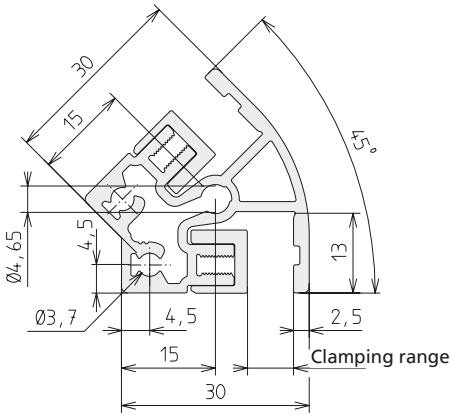

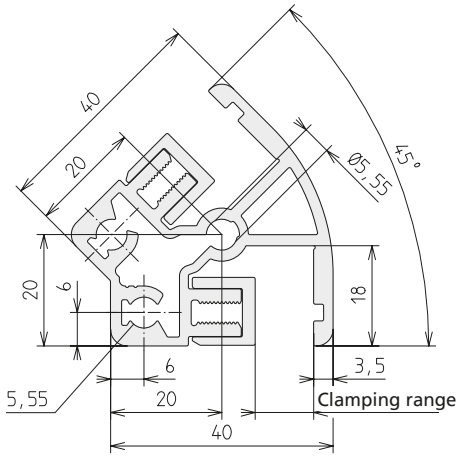

Code No.	Size	Version	Clamping range	Anodised
4425000	30	Cut to size (max. 6000 mm)	3 - 6 mm	Clear
4425001	30	6000 mm bar	3 - 6 mm	Clear
4475100	40	Cut to size (max. 6000 mm)	0 - 6 mm	Clear
4475101	40	6000 mm bar	0 - 6 mm	Clear
4475000	40	Cut to size (max. 6000 mm)	4 - 10 mm	Clear
4475001	40	6000 mm bar	4 - 10 mm	Clear

Profiles

Clamping profile KLW-60



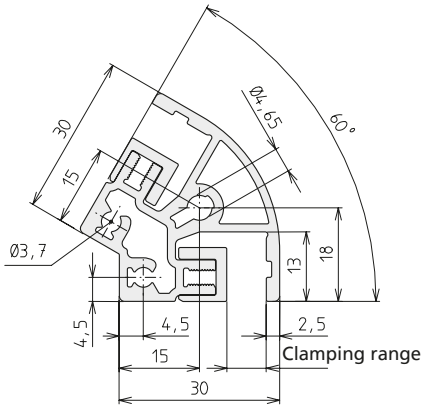

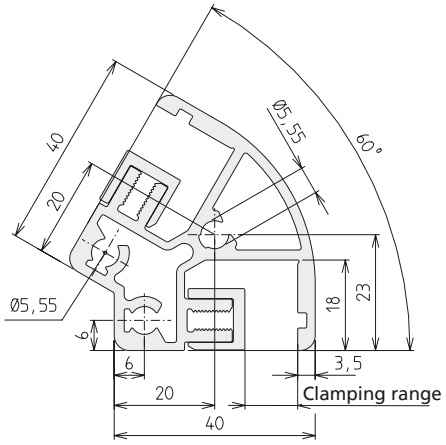

Code No.	Size	Version	Clamping range	Anodised
4445000	30	Cut to size (max. 6000 mm)	3 - 6 mm	Clear
4445001	30	6000 mm bar	3 - 6 mm	Clear
4495100	40	Cut to size (max. 6000 mm)	0 - 6 mm	Clear
4495101	40	6000 mm bar	0 - 6 mm	Clear
4495000	40	Cut to size (max. 6000 mm)	4 - 10 mm	Clear
4495001	40	6000 mm bar	4 - 10 mm	Clear

Clamping profile KLW-90



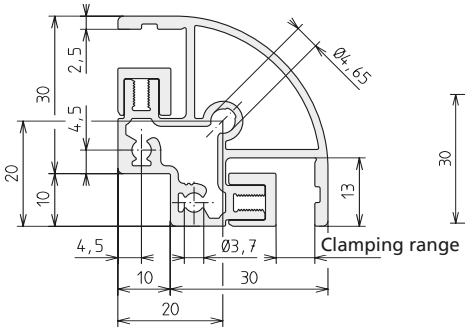

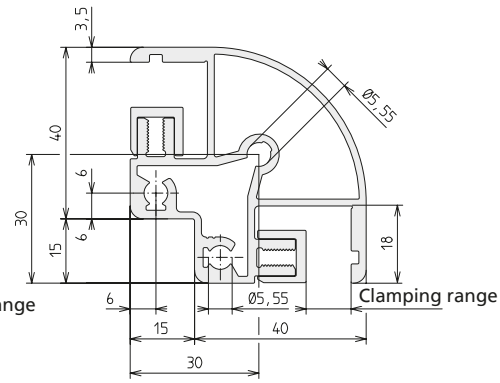

Code No.	Size	Version	Clamping range	Anodised
4435000	30	Cut to size (max. 6000 mm)	3 - 6 mm	Clear
4435001	30	6000 mm bar	3 - 6 mm	Clear
4485100	40	Cut to size (max. 6000 mm)	0 - 6 mm	Clear
4485101	40	6000 mm bar	0 - 6 mm	Clear
4485000	40	Cut to size (max. 6000 mm)	4 - 10 mm	Clear
4485001	40	6000 mm bar	4 - 10 mm	Clear

Sliding door profile STP



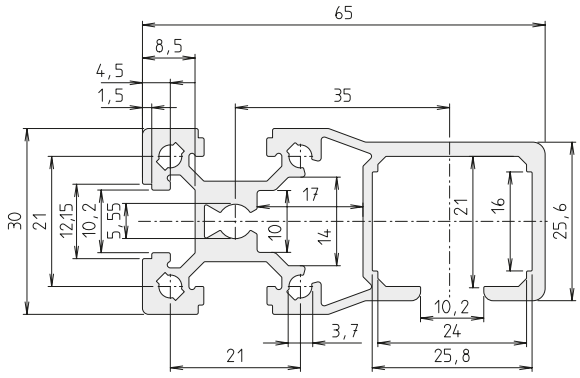

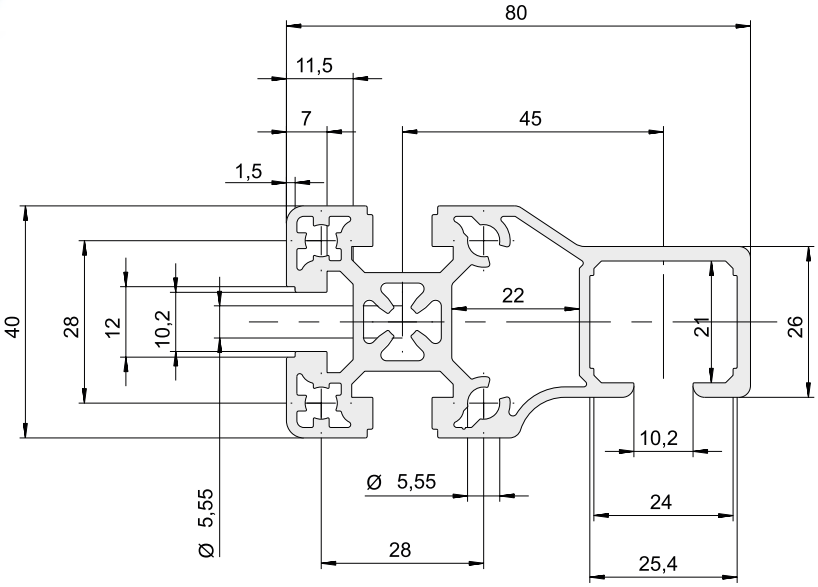

Code No.	Size	Version	Anodised
4175000	30	Cut to size (max. 6000 mm)	Clear
4175001	30	6000 mm bar	Clear
4185000	40	Cut to size (max. 6000 mm)	Clear
4185001	40	6000 mm bar	Clear

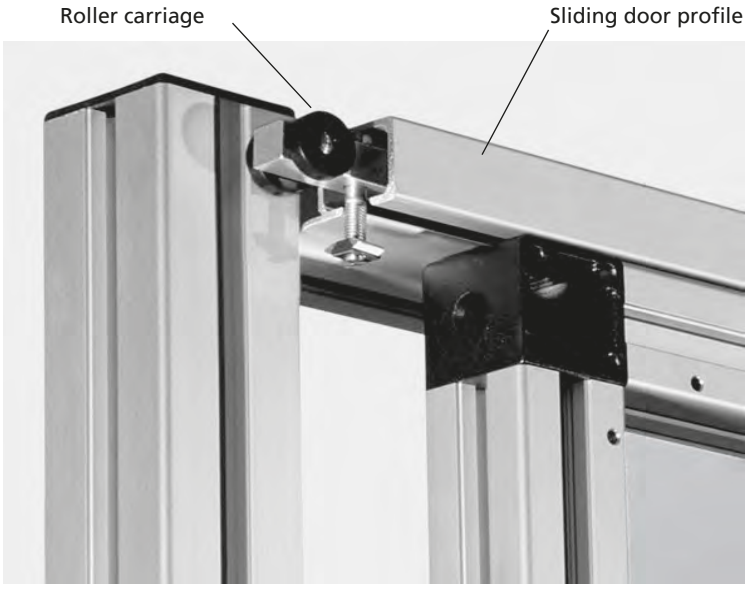

Application example sliding door profile

Profiles

Pillar profile S-40x40



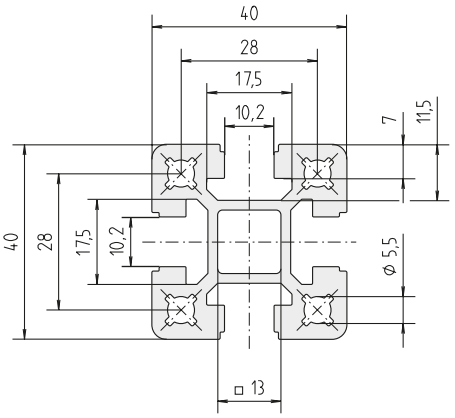

Code No.	Size	Version	Anodised
4015000	40	Cut to size (max. 6000 mm)	Clear
4015001	40	6000 mm bar	Clear

Pillar profile F-50x50



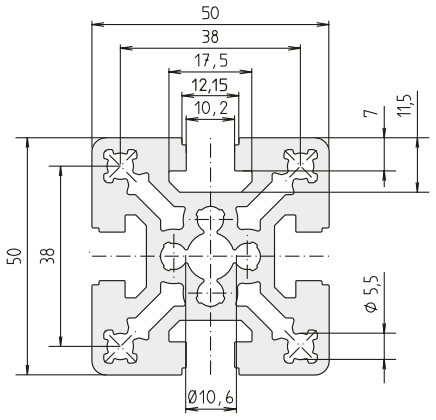

Code No.	Size	Version	Anodised
4085000	50	Cut to size (max. 6000 mm)	Clear
4085001	50	6000 mm bar	Clear

Pillar profile SP-50x50



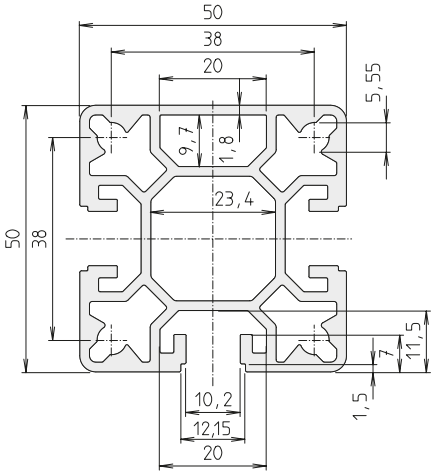

Code No.	Size	Version	Anodised
4635000	50	Cut to size (max. 6000 mm)	Clear
4635001	50	6000 mm bar	Clear

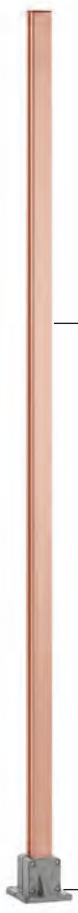

Pillar profile see page 438–439

Complete pillars, page 418

Base clamp, page 440

Accessories

Base clamp FVV



- Clamp to take size 40 and 50 pillar profiles. See pag 438–439.
- Set screws can be used to compensate for unevenness.
- Levelling shims give the base clamp a full contact surface.

Base clamp
Material: Gravity die-cast aluminium
Includes:
Clamp, set screw and clamping screws
Supporting shim
Material: Steel
Includes: One 1-mm shim
Levelling shims
Material: Aluminium
Includes: The Code No. includes one set of 4 1-mm shims and 1 0.5-mm shim.

For pillar profile S-40x40



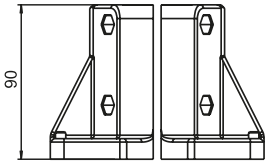

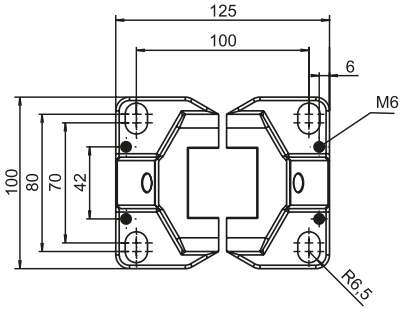

For pillar profile 50, F-50x50



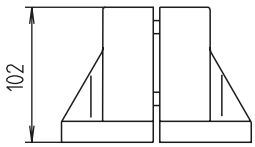

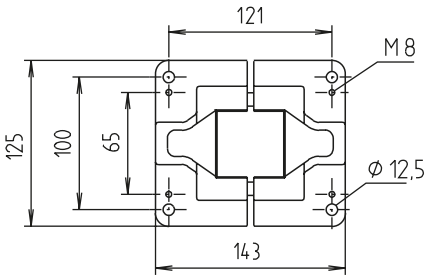

Code No.	Type
4014312	Base clamp FVV-S 40
4084300	Base clamp FVV-S 50
4080500	Supporting shim for FVV 50
40143011	Levelling shims for FVV 40
40143021	Levelling shims for FVV 50

Order instruction:

- Purchase only in lot sizes and a multiple of that see product table below

- For fixing type 1 and 2 base versions (see page) and the 60° support (see below) to the substrate.

Material:
Galvanised steel.

Fixing bolt

HLA



BA

[mm]

Code No.	Type	lot sizes	length	Hole diameter
4016611	HLA	4, 8, 12... pcs	110	12
4016612	BA	4, 8, 12... pcs	115	8

Support

Material:
Black powder-coated steel,
Galvanised fastenings.
Includes:
Comple with fixing for pillar profile. (For floor fixing, see above)



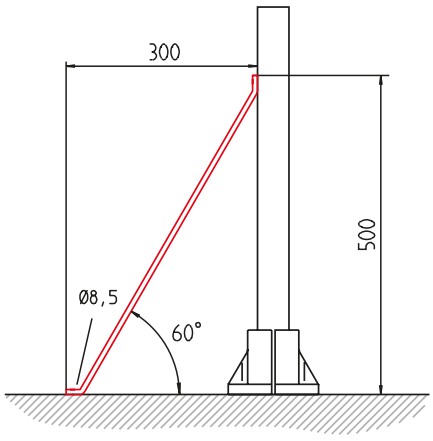

Code No.	Type
4082561	Support 60°

Accessories

Order instruction:

- Purchase only in lot sizes and a multiple of that see product table below

Corner joint

- Connection element for right-angled connections for clamping and inserting profiles (see page 428–429).
- The fixing screws are inserted directly into the profile. Centring pins prevent profile torsion.
- With versions KL/KLE, the screw holes can optionally be sealed with a plastic cap.

Material:
Die-cast zinc, gravity die-cast aluminium
(see table)

Includes:
Includes all parts required to fully assemble one corner joint

Version KL



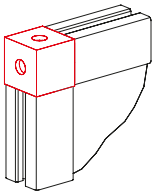

Version KLE



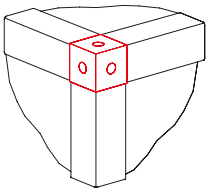

Version KLK



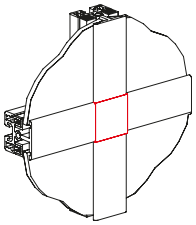

Version KLA



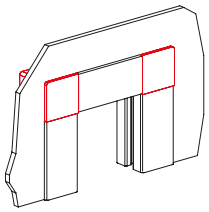

Version KLV



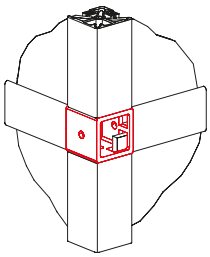

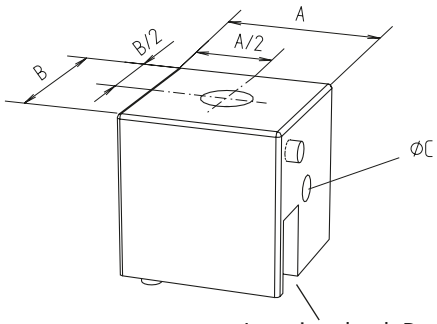

[mm]

Code No.	Type	lot sizes	For profile	A	B	C	D
Die-cast zinc							
4202409	KLA 30	4, 8, 12...pcs	KL,ESP,ESP-2	30	30	5,4	13
4212409	KLA 40	4, 8, 12...pcs		40	40	6,4	18
Gravity die-cast aluminium							
4202408	KLK 30	4, 8, 12...pcs	KLD	30	30	5,4	13
4212408	KLK 40	4, 8, 12...pcs	KLD	40	40	6,4	18
4202407	KLV 30	4, 8, 12...pcs	KLE,KLD	30	30	5,4	13
4212407	KLV 40	4, 8, 12...pcs		40	40	6,4	18

Code No.	Type	lot sizes	For profile	A	B	C	D
Die-cast zinc							
4202406	KL 30	4, 8, 12...pcs	KL,ESP,ESP-2, F-/G/GG/2G/3G	30	30	5,4	20
4212406	KL 40	4, 8, 12...pcs		40	40	6,4	27
4702406	KLE 30	4, 8, 12...pcs	KLE,F-/G/GG, 2G/3G	30	30	5,4	13
4712406	KLE 40	4, 8, 12...pcs		40	40	6,4	18
Stopper (black)							
40185971	KL/KLE 30	100, 200, 300... pcs	-				
40185981	KL/KLE 40	100, 200, 300... pcs					
Cap (black)							
4000421	KL 30	10, 20, 30... pcs	-				
4010421	KL 40	10, 20, 30... pcs					

Corner joint

Corner joint KLW



Corner joint KLWK



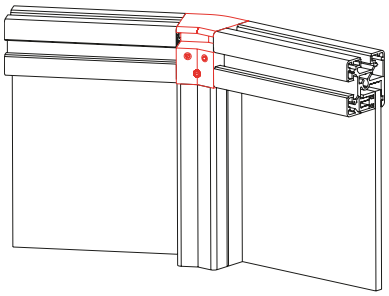

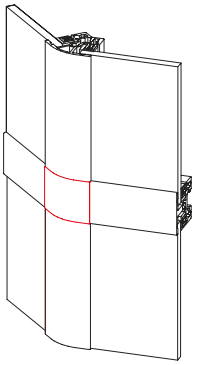

- Connection element for assembling profile angle brackets and clamping profiles
- Centring pin provides rotation locking

Material:
Die-cast zinc, black powder-coated aluminium (see table)
Includes:
Includes all parts required to fully assemble one corner joint

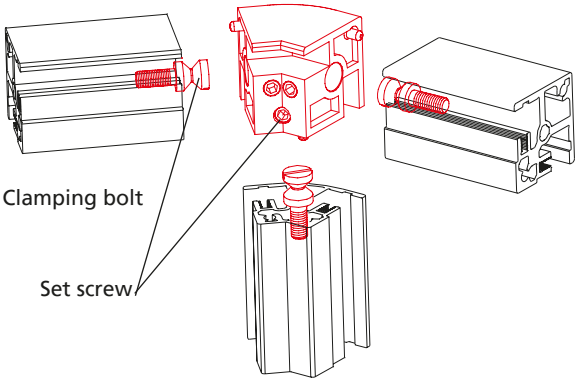

Assembly steps

1. Screw clamping bolt into profile
2. Put together with corner joint
3. Tighten set screw on corner joint – done!

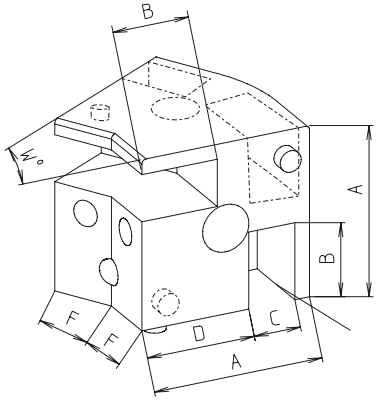

Insertion depth B

*If using W-profiles, the corners of panels may have to be notched.

Code No.	Type	For profile*	A	B	C	D	F	W
Die-cast zinc								
4412406	KLW 30-30	KLW 30-30, KL, KLE, ESP 30	30	13	8	19.5	11.0	30°
4422406	KLW 30-45	KLW 30-45, KL, KLE, ESP 30	30	13	8	19.5	8.8	45°
4622406	KLW 30-60	KLW 30-60, KL, KLE, ESP 30	30	13	8	19.5	8	60°
4432406	KLW 30-90	KLW 30-90, KL, KLE, ESP 30	30	13	8	19.5	10.0	90°
4472406	KLW 40-45	KLW 40-45, KL, KLE, ESP 40	40	18	11	25.5	11.7	45°
4632406	KLW 40-60	KLW 40-60, KL, KLE, ESP 40	40	18	11	25.5	11.5	60°
4482406	KLW 40-90	KLW 40-90, KL, KLE, ESP 40	40	18	11	25.5	15.0	90°
Black powder-coated aluminium								
4402406	KLW 30-15	KLW 30-15, KL, KLE, ESP 30	30	13	8	19.5	13.0	15°
4452406	KLW 40-15	KLW 40-15, KL, KLE, ESP 40	40	18	11	25.5	17.4	15°
4462406	KLW 40-30	KLW 40-30, KL, KLE, ESP 40	40	18	11	25.5	14.6	30°
4422407	KLWK 30-45	KLW 30-45, KLD 30	30	13	8	19.5	8.8	45°
4472407	KLWK 40-45	KLW 40-45, KLD 40	40	18	11	25.5	11.7	45°

Accessories

Connection element -S- (Click&Safe)

- Operation complies with EU Machinery Directive 2006/42/EC
- Extremely quick and simple assembly without tools and without fastenings
- Angle compensation ±5 degrees between post and frame
- Disassembly only possible with a special unlocking tool according to the machinery directive

Material:
Black plastic, galvanised steel fastenings

Includes:
Connection elements to take one profile frame (2 tops, 2 bottoms, fastenings)

Connection element



Unlocking tool



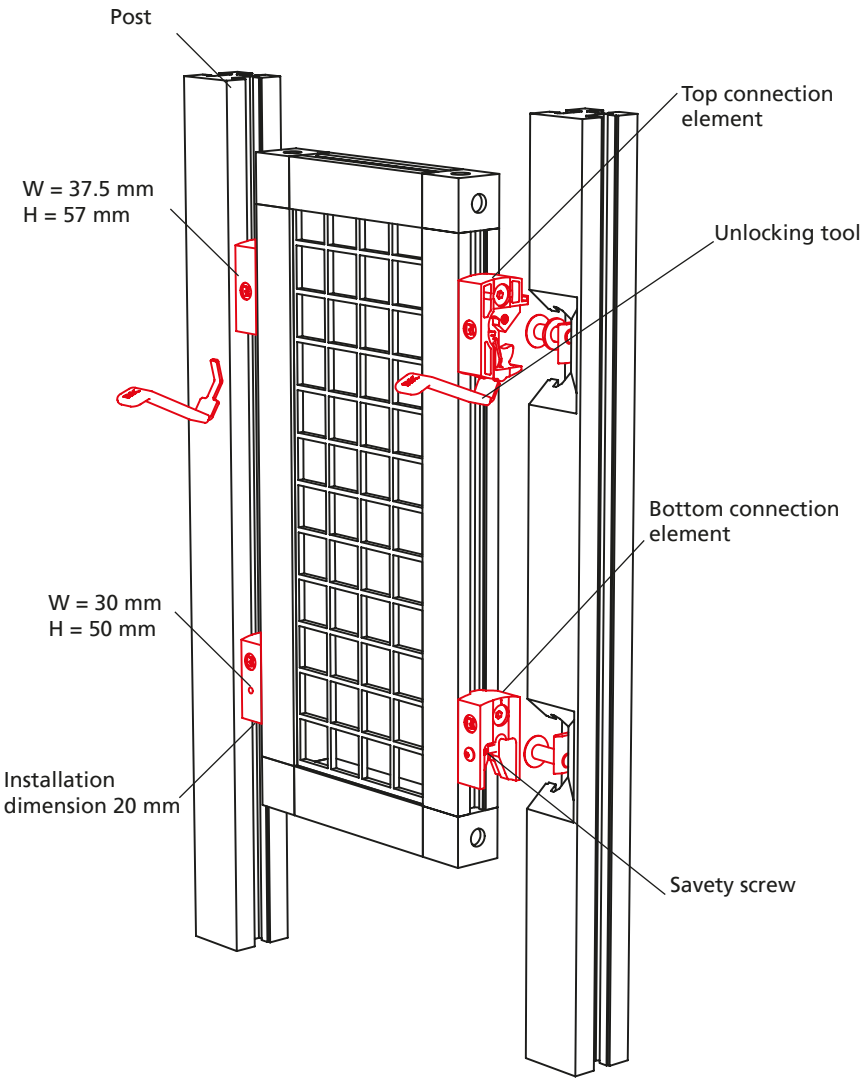

According to the machinery directive 2006/42/EC (valid from 29/12/2009)

Code No.	Type	Slot geometry
4000657	Connection element 30	30
4010657	Connection element 40	40
4000658	Connection element 30-40	30 to 40
4016697	Unlocking tool, set of 2	



Assembly:

1) Insert frame into the lower holder.



2) Press frame into the holder at the top.
The safety guard element automatically engages and locks.

Done!



A safety guard element is disassembled with a special unlocking tool according to the machinery directive.

Accessories

Bracing plate



- For additional reinforcement if required

Material:
Black powder-coated steel, galvanised fastenings
Includes:
Complete with fixing set

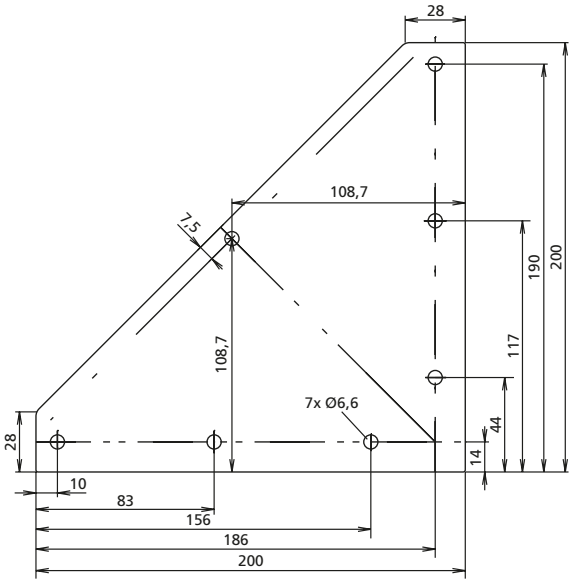

Code No.	Slot geometry
4012112	40

Cover profile

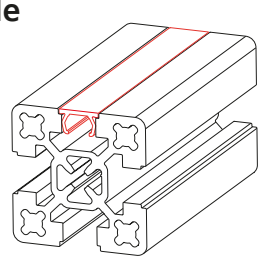

- For the flush covering of longitudinal slots.
- Due to the geometry of type 1, it is possible to route leads in the slot. Type 2, on the other hand, is easier to take out of the profile slot (without leaving residues).

Material:
Plastic, further special colours available on request

White
RAL 9006

Grey
RAL 7035

Yellow
RAL 1021

Red
RAL 3020

Blue
RAL 5005

Black
RAL 9005

Please note that, for typographical reasons, the colours illustrated here are only an approximation of the RAL colours.

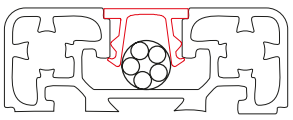

Type 1

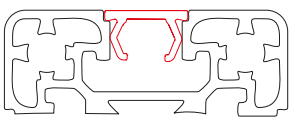

Type 2

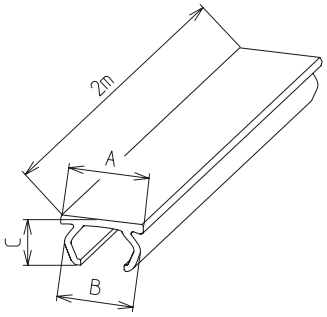

Code No.	Type	Colour	A	B	C
4000575	2	Grey	12	11.2	6.4
4000577	2	White	12	11.2	6.4
4000579	2	Yellow	12	11.2	6.4
4000581	2	Red	12	11.2	6.4
4000583	2	Blue	12	11.2	6.4
4000570	2	Black	12	11.2	6.4
4000585	1	Yellow	12	11.2	6.4
4008570	1	Black	12	11.2	6.4
4000586	1	Transparent	12	11.2	6.4

Profile seal

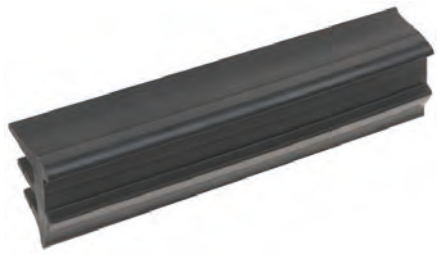

- For sealing panels (see page „Panels“ on page 463). The clampable wall thickness is reduced by 2 mm.

Material:
Black plastic

Code No.	Sealing	For panel thickness	Slot geometry	Length
421857110000	1-sided	*For all clamping profiles	30, 40	10 m
421857150000				50 m
4218571100000				100 m

Door gap seal

- Acts as a door stop
- Compensates for variation in the door gap width

Material:
Black plastic
Shore hardness:
55 Shore



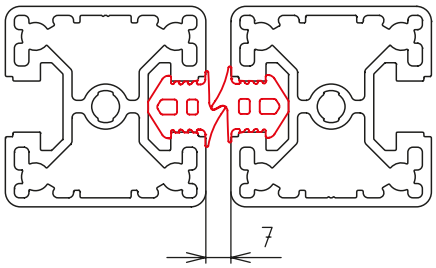

Code No.	Type	Slot geometry
401851810000	Door gap seal, 10 m roll	40
401851850000	Door gap seal, 50 m roll	40
4018518100000	Door gap seal, 100 m roll	40

Rim



- The rim is simply pressed into the profile slot and protects the structure against damage.
- Application examples include door stop protection or as edge protection when handling structures.
- The profile is available to cut to size or on a roll.

Material: Black plastic
Shore hardness: 70 Shore

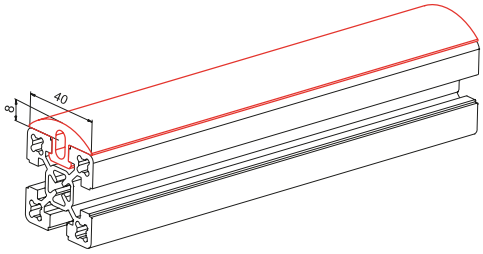

Code No.	Type	Slot geometry
4018594	Rim, 30 m roll	40
401859910000	Rim, 10 m roll	40

Accessories

Hinges

Material:
Black anodised aluminium,
galvanised steel parts

Includes:
With fixing set

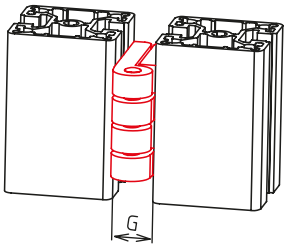

Lift off hinge (narrow)



Version
Right

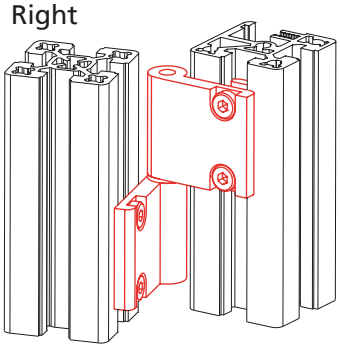

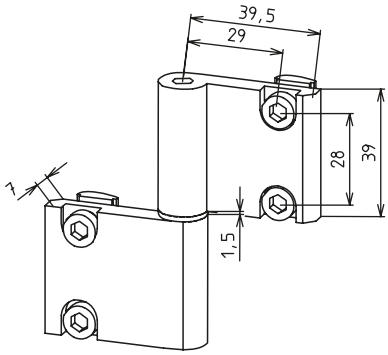

Butt hinge



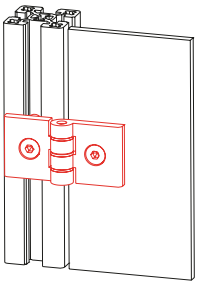

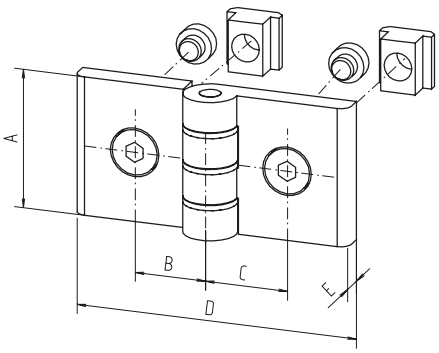

Lift off hinge



Version
left right

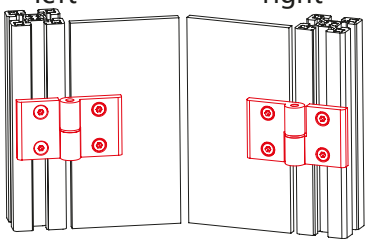

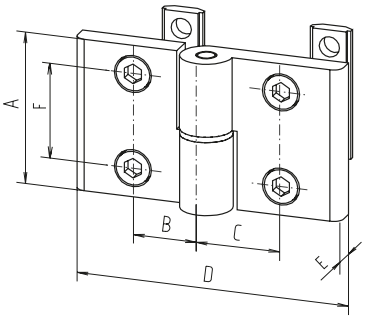

*For further versions,
please see section III

Code No.	Type	A	B	C	D	E	F	G
4015525	Butt hinge, 40 slot geometry	40	22	22	79	7	–	15
4015520	Lift off hinge, 40 slot geometry, left	45	22	22	79	7	28	15
4015521	Lift off hinge, 40 slot geometry, left	45	22	22	79	7	28	15
4015523	Lift off hinge, narrow, 40 slot geometry, left			See diagram				7.5
4015522	Lift off hinge, narrow, 40 slot geometry, right							7.5

Piano hinge



- Variable in length
- Taylor-made orderable

Material:
aluminium clear anodized
sliding disks plastic
dowel pins, galvanised steel

Includes:
complete with fixing set

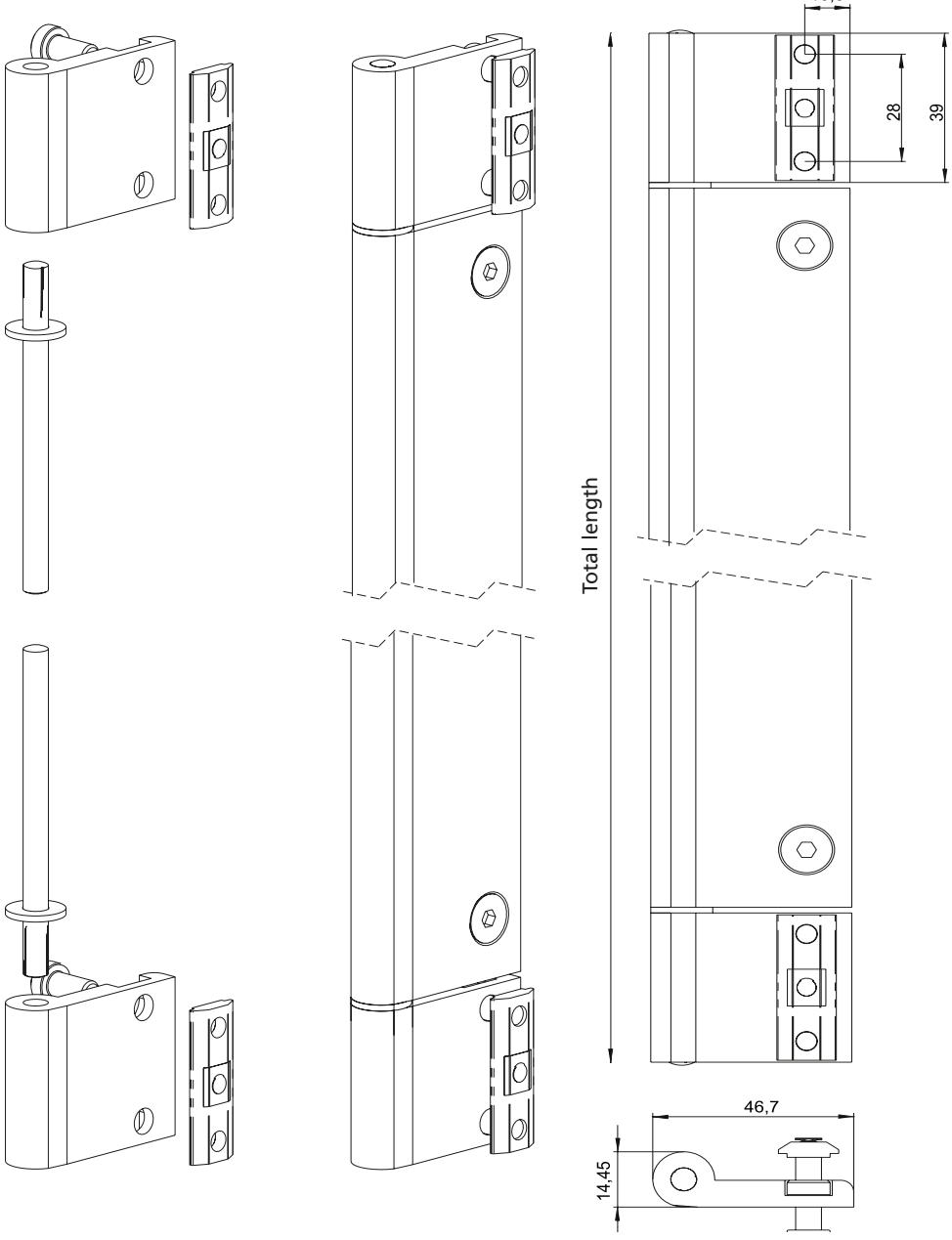

Code No.	Type	length	Max. length	Slot geometry
4010627 _ _ _ _	Band hinge complete	200	2500	40

Total length [mm]

Accessories

Ball catch

Material:
Aluminium, brass

Fixing:
Galvanised steel.

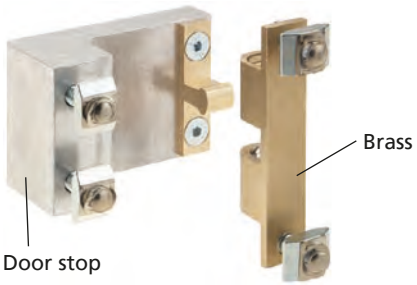

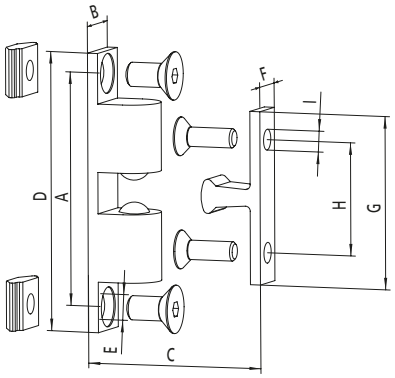

Code No.	Type	A	B	C_{min}	D	E	F	G	H	I
4010606	Without door stop	48.5	12	11.6	58	5.3	8.5	36	23.5	4.3
4000608	With door stop for fixing profile 30 to 30									
4010607	With door stop for fixing profile 30 to 40									
4010608	With door stop for fixing profile 40 to 40									
4000609	With door stop for fixing profile 50 to 50									

Magnetic lock

- Suitable from profile size 40.
  Complete with fixing set.

Material:
Plastic, galvanised steel parts.

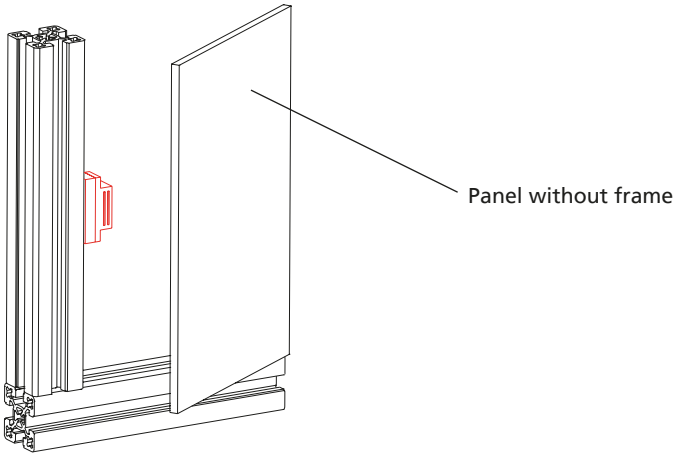

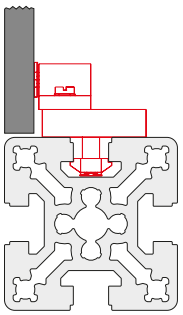
Fig. 1

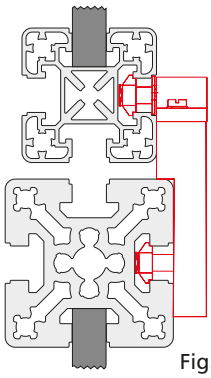
Fig. 2

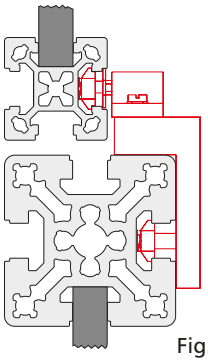
Fig. 3

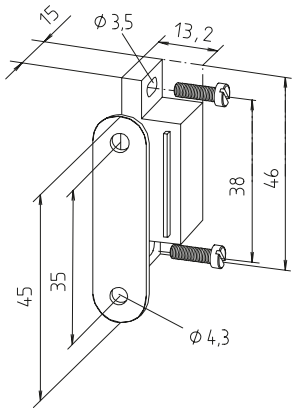

Code No.	Profile assembly	Installation	Sim. to fig.
4010605	From 30	Without frame	1
4010604	From 30	Profiles centr.	2
4000610	30 to 30	Profiles centr.	2
4010611	40 to 30	Profiles centr.	2
4010612	40 to 30	Profiles flush	3
4080603	50 to 30	Profiles flush	3
4080606	50 to 40	Profiles centr.	2
4080604	50 to 40	Profiles flush	3

Accessories

Magnetic lock universal

- Suitable from profile size 30 for all assembly versions
- Holding force 10/20 N depends on mounting direction

Material:
polyamide glasfibre reinforced
steel parts zincplated



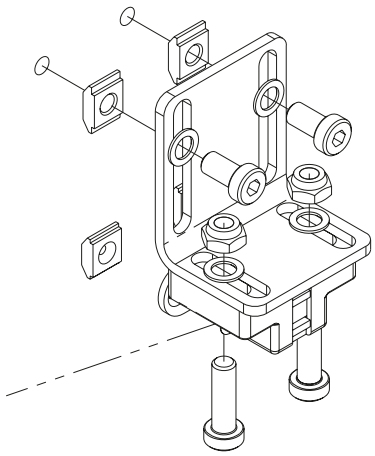

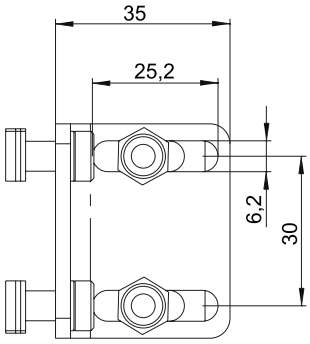

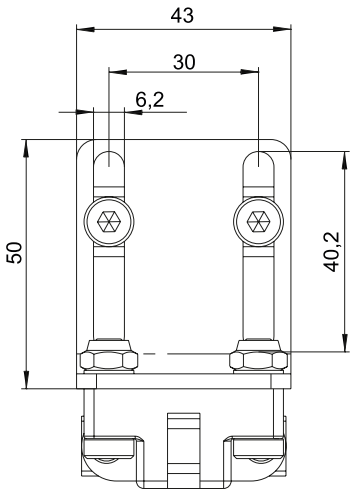

■ Assembly versions

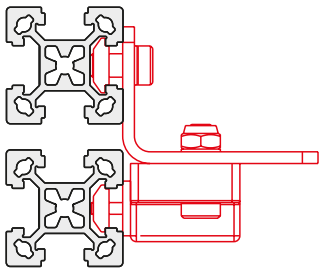

30 to 30 - Profile

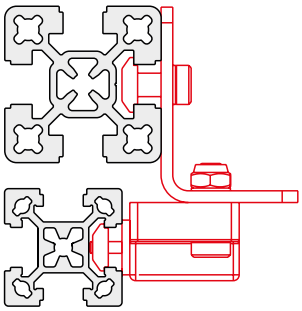

30 to 40 - Profile flush

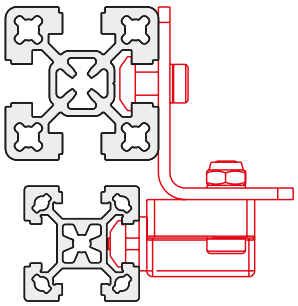

30 to 40 - Profile centred

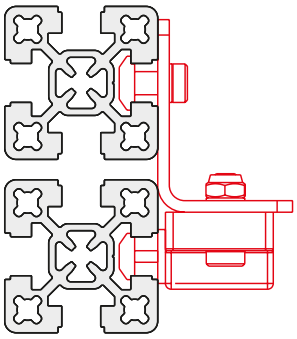

40 to 40 - Profile

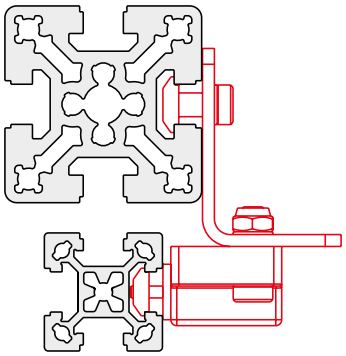

30 to 50 - Profile centred

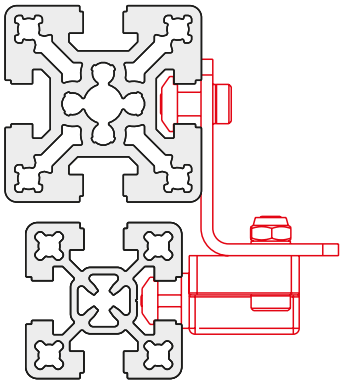

40 to 50 - Profile centred

Code No.	Type	Slot geom.
4010625	Magnetic lock universal with fixing set	30/40
4010626	Magnetic lock universal without fixing set	—

Ball catch universal

- Suitable from profile size 30 for all assembly versions
- Holding force 50 N

Material:
polyamide glasfibre reinforced steel parts zincplated



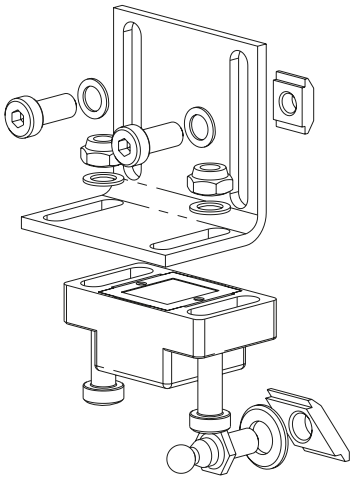

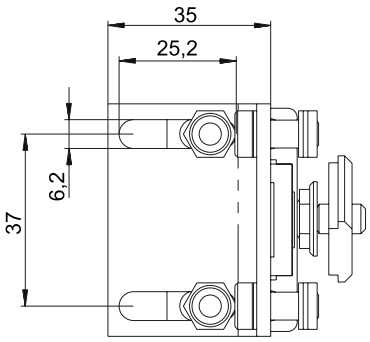

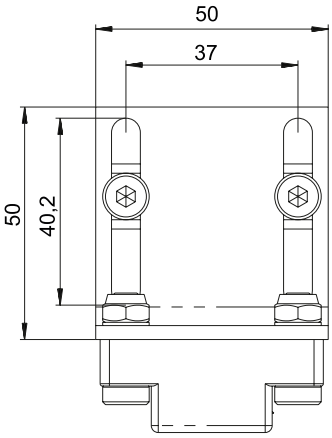

- Assembly versions

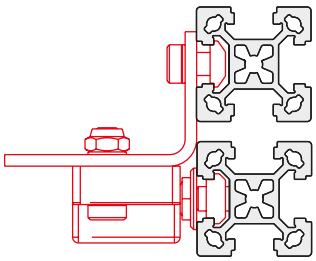
30 to 30 - Profile

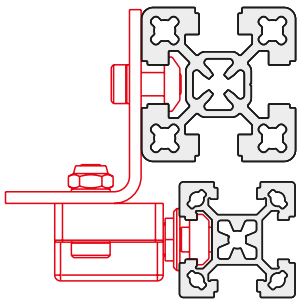
30 to 40 - Profile flush

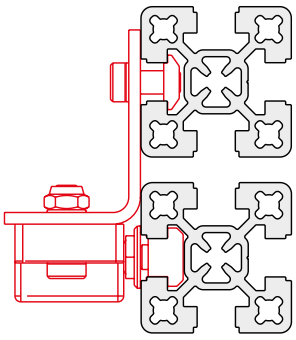
40 to 40 - Profile

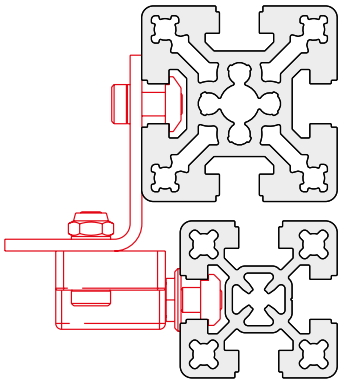
40 to 50 - Profile flush

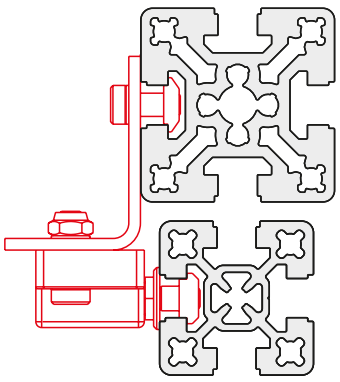
40 to 50 - Profile centred

Code No.	Type	Slot geom.
4010630	Ball catch universal with fixing set	30/40
4010631	Ball catch universal without fixing set	—

Accessories

Slam Latch PRO





Material: die-cast aluminium
black powder-coated
Includes:
complete with fixing set.

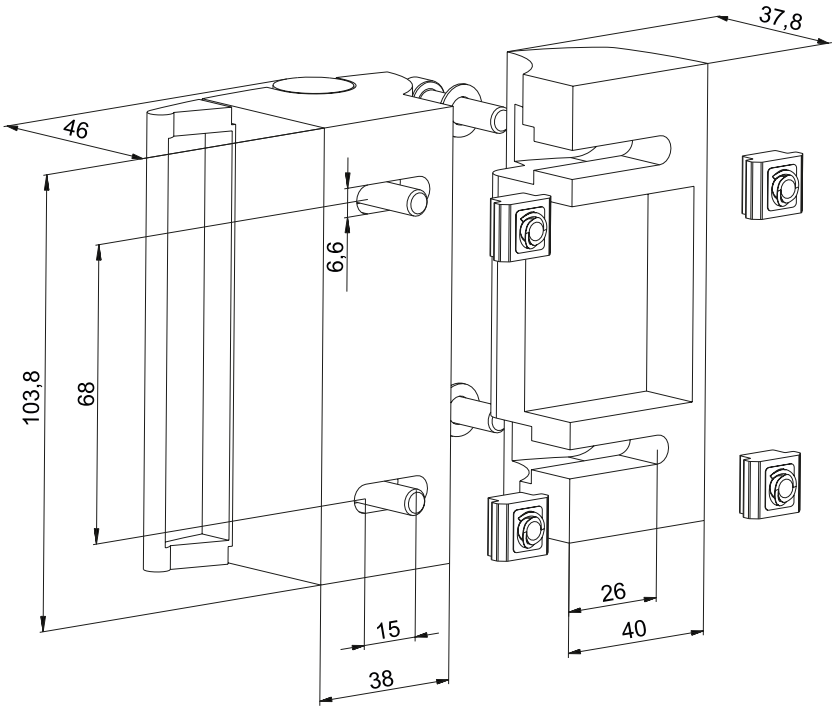

[mm]

Code No.	Slot geometry
401A530	40

Slam Latch Compact





Material:
die-cast aluminium
black powder-coated

Includes:
complete with fixing set.

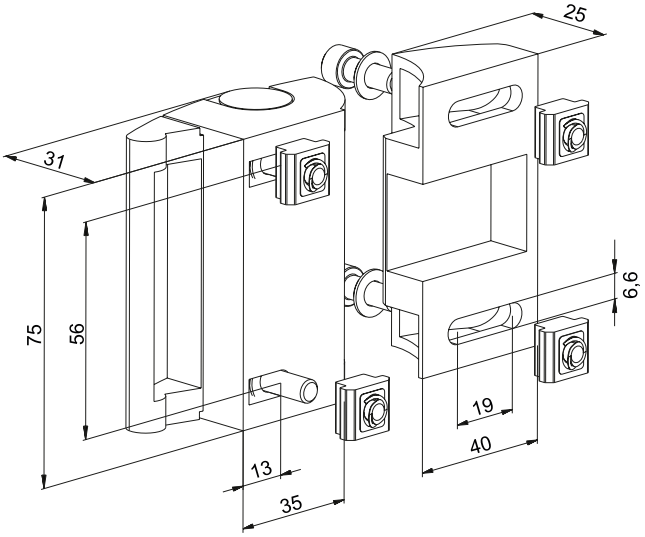

[mm]

Code No.	Slot geometry
401A531	40

Door stopper

- Suitable from profile size 40.

Material:
Black plastic

Includes:
With fastenings, galvanised steel



Set screws for fine adjustment of the door

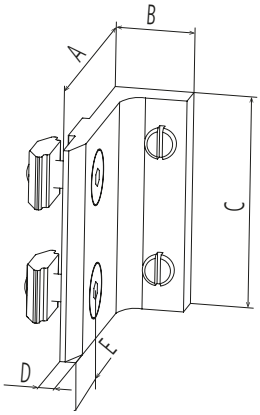

[mm]

Code No.	Slot geometry	A	B	C	D	E
4008650	30	34	14.7	40	3	11
4018650	40	44	14,7	40	3	16

Handle

Material size 150 and 197:
Black plastic, fibreglass-reinforced

Material size 152:
Black powder-coated aluminium

Includes:
With fastenings, galvanised steel.

Size 150 and 197



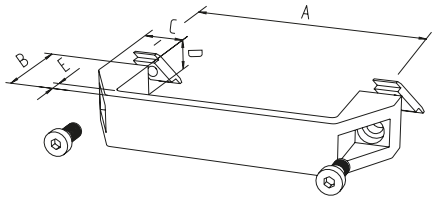

Size 152



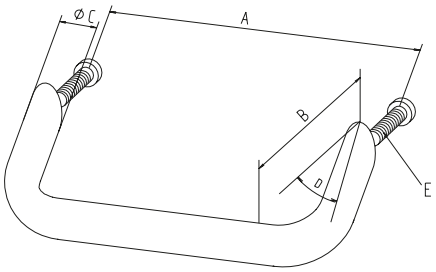

[mm]

Code No.	Size	Slot geometry	A	B	C	D	E
4005596	152	Drill	128	50	20	35°	M6x30
4015598	152	Drill	128	50	20	35°	M6x40
4008596	150	30	131	44	21	27	7
4015596	150	40	131	44	21	27	7
4015597	197	40	178	50	22	28	7

Accessories

Door lock -KL-

- Installation between two clamping profiles without additional profile machining
- Version available with door handle or panic lock

Material:
Gravity die-cast aluminium, galvanised steel

Includes:
complete door lock with cylinder lock, handle set and fastenings



Sliding door version

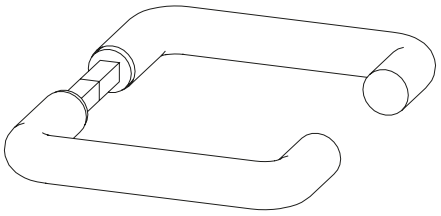

Handle set
with hinged door
and sliding door

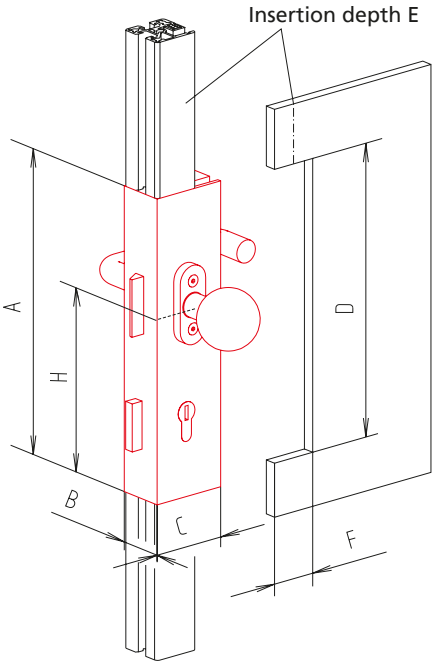

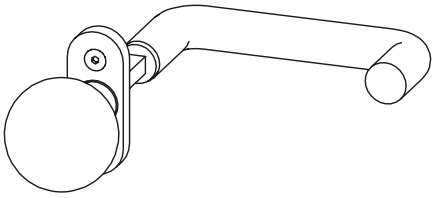

Handle set with
hinged door with panic lock
(one fixed knob,
one door handle)

[mm]

Code No.	Version	A	B	C	D	E	F	H
4210630	For hinged door KL 40, right	255	40	65	242	15	32	161.5
4210631	For hinged door KL 40, left	255	40	65	242	15	32	161.5
4210632	For hinged door KL 40 with panic lock, right	255	40	65	242	15	32	161.5
4210633	For hinged door KL 40 with panic lock, left	255	40	65	242	15	32	161.5
4210636	For sliding door KL 40, right	255	40	65	242	15	32	132
4210637	For sliding door KL 40, left	255	40	65	242	15	32	132

Door lock Typ 2 - KL 40

- Installation between clamping profiles no additional recuired machining

Material: aluminium clear anodized, galvanised steel

Includes:
complete door lock with housing, handle set and fastenings



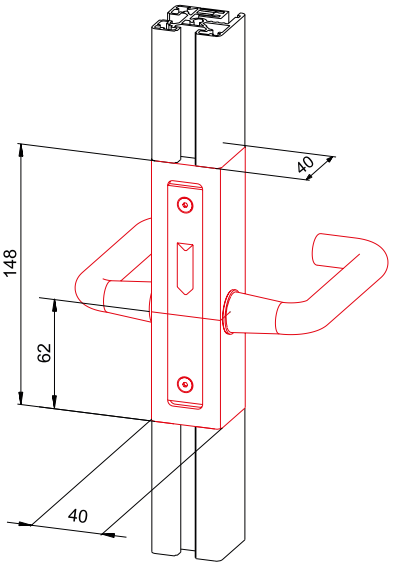

Code No.	Type
4215632	Door lock Typ 2 - KL 40 right without cylinder lock
4215633	Door lock Typ 2 - KL 40 left without cylinder lock



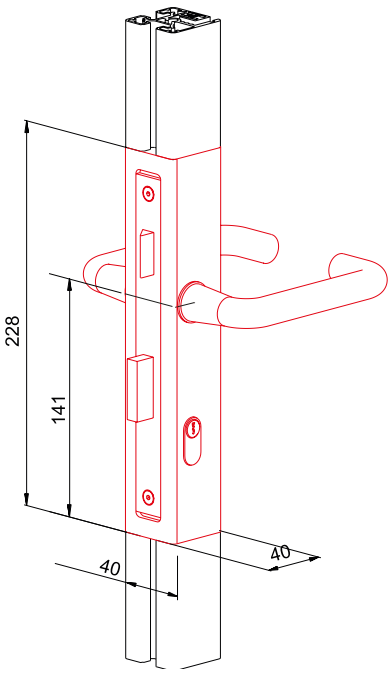

Code No.	Type
4215630	Door lock Type 2 - KL 40 right with cylinder lock
4215631	Door lock Typ 2 - KL 40 left with cylinder lock

Accessories

Roller module / sliding piece

- Primarily for use in sliding doors
- Profile slot fixation
- Very good running properties thanks to large roller diameter
- Sliding pieces act as a guide at the bottom of the sliding doors

Material:
Plastic roller, plastic sliding piece

Includes:
Roller module complete with roller, cover plates and fastenings.
Sliding piece with set screws





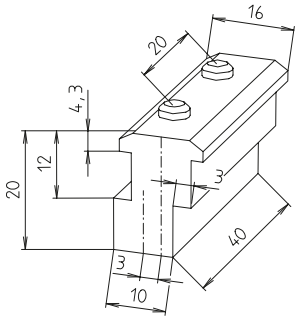

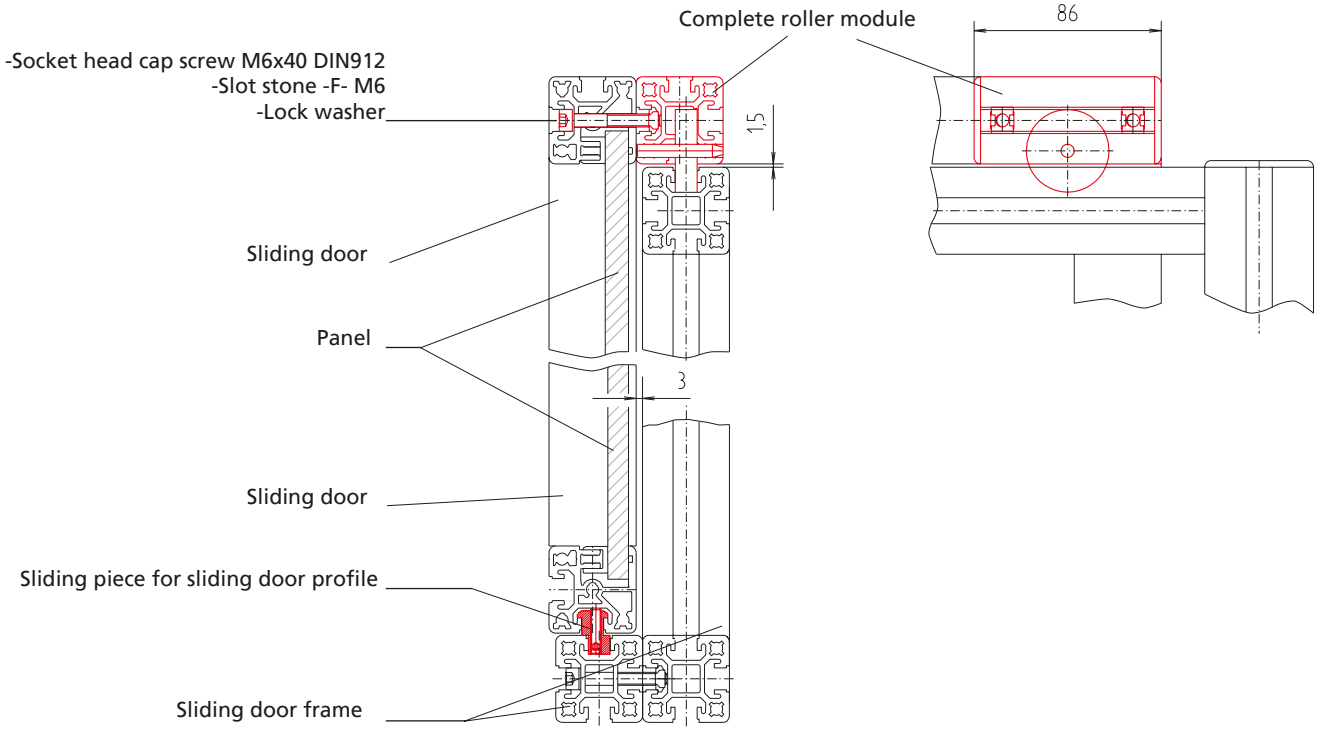

Code No.	Version
4018649	Complete roller carriage, from profile 40x40
4018648	Sliding piece for sliding door guide, from profile 40x40

Roller carriage

- Geared to sliding door profiles 30 and 40 (page 437)
- Can also be used as single components in structures

Material:
Aluminium base body with slide bush, black plastic rollers



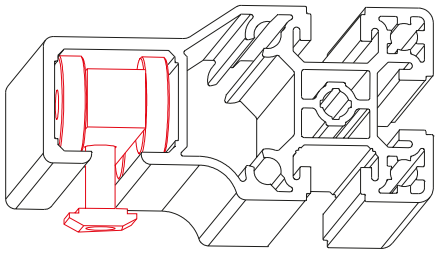

Sliding door profile

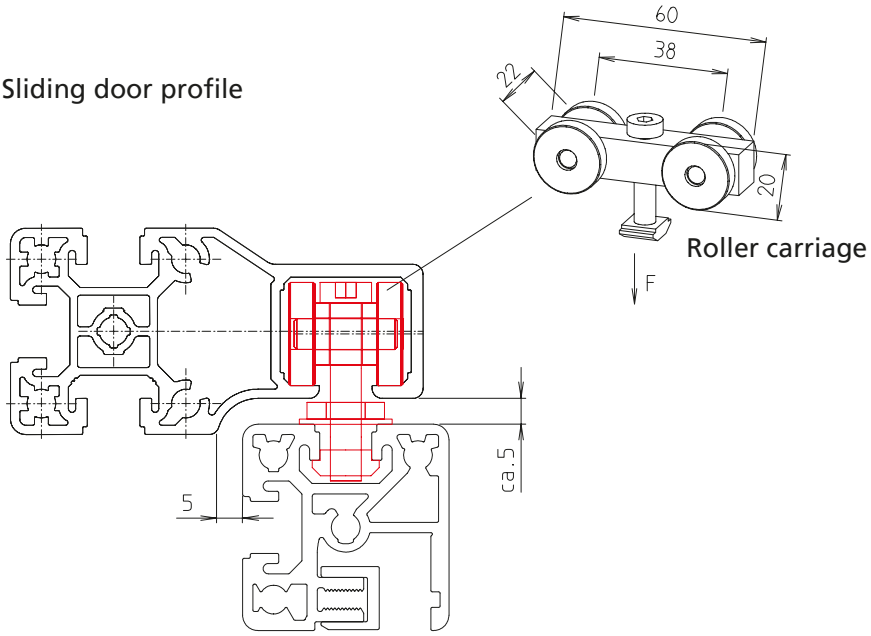



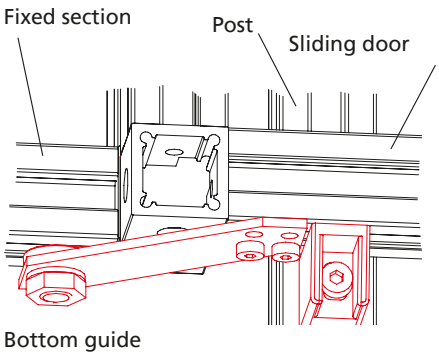

Bottom guide

Code No.	Type	Version	F
4170601	30	Complete roller carriage	150 N
4180601	40	Complete roller carriage	150 N
4008660	30	Bottom guide	
4018660	40	Bottom guide	

Accessories

Safety switch AZ 15zvr

- For safely switching off circuits
- Suitable for hinged, flap, sliding and lifting doors

Technical data: Self-extinguishing fibreglass-reinforced thermoplastic
Actuator key:
Stainless spring steel
Degree of protection:
IP67 to IEC 529/EN 60529/DIN VDE 0470-1
Contact material: Fine silver
Contact type: One-pin, double-breaking, positively driven NC to VDE 001
Pivot radius: R_{min} 450 mm
Rated isolation voltage:
VI 500 V approx. 25-60 Hz.

Constant current: 10 A
Rated operating current Iu AC 11h
4 A (230V), 2,5 A (380 V),
1A (500 W)
Short circuit resistance:
10 A (slow) 16 A (fast).
Contact gap 2 x 3 mm.
Positive opening travel/force:
8 mm / approx. 30 N
Mech. lifetime:
$10x10^6$ switching cycles
Operating temperature:
-30 to +80°C.



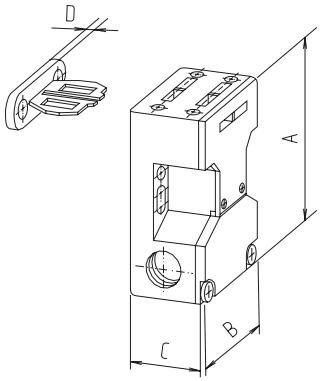

[mm]

Code No.	Type	A	B	C	D
4010610	AZ 15 zvr for sliding door / lifting door	72	52	30	5
4010613	AZ 15 zvr for sliding door	72	52	30	5
4010614	AZ 15 zvr for flap door	72	52	30	5
4015610	Fixing set for sliding door, hinged door		Fig. 1, 2, 3	40 slot geometry	
4015602	Fixing set for lifting door		Fig. 4		

Further fixing sets available on request

Fixing set for sliding and hinged door.
See fig. 1-3 on the next page.

Fixing set for lifting door
See fig. 14 on the next page.

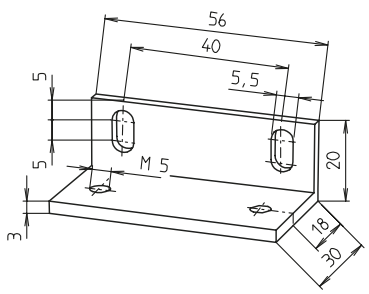

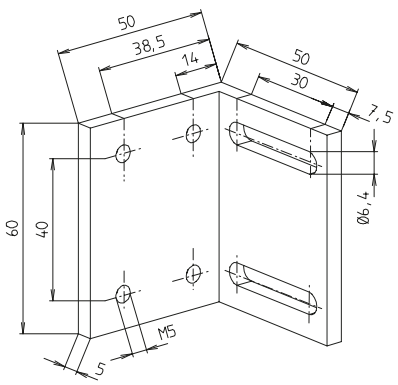

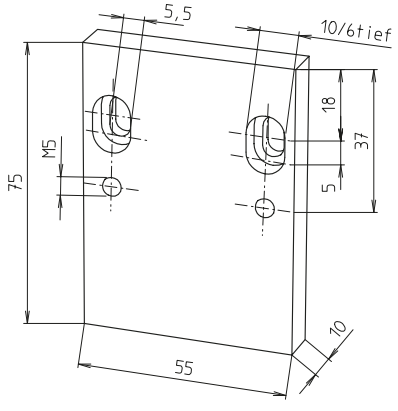

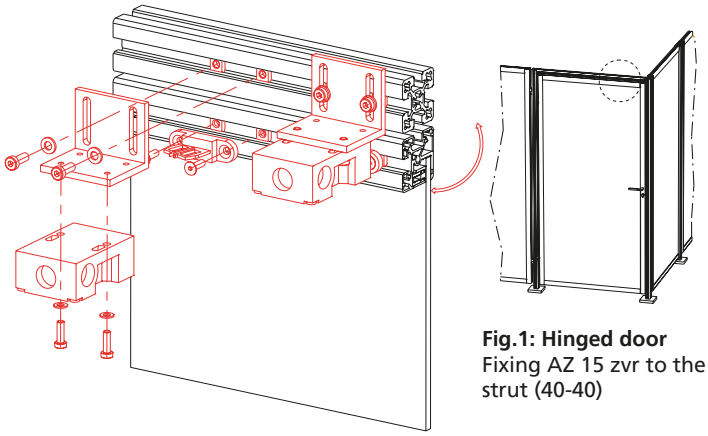

Fig.1: Hinged door
Fixing AZ 15 zvr to the top strut (40-40)

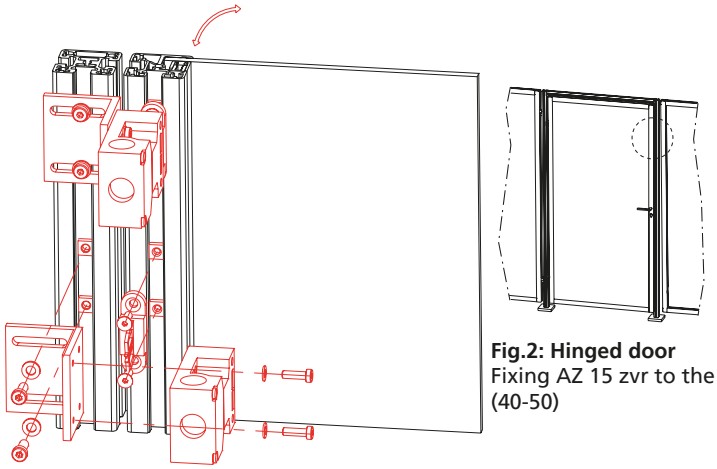

Fig.2: Hinged door
Fixing AZ 15 zvr to the side strut (40-50)

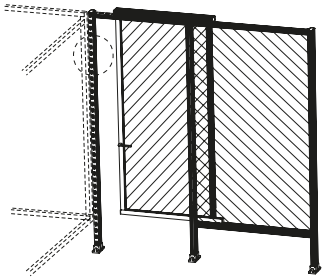

Fig. 3: Sliding door
Fixing AZ 15 zvr to the side strut (50-40)

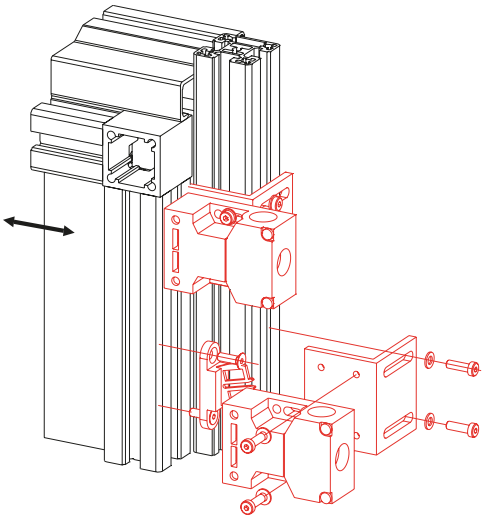

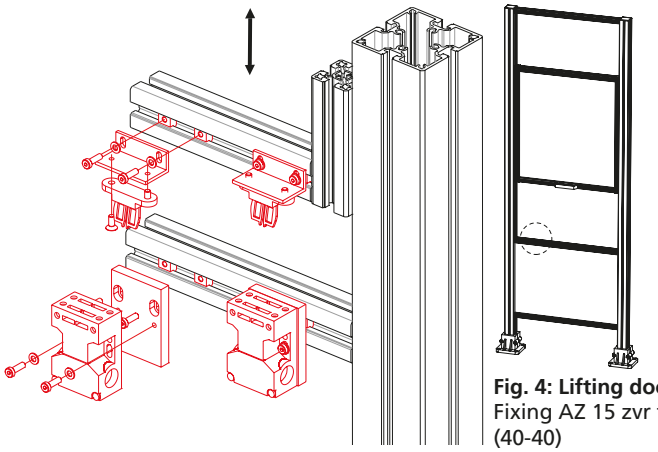

Fig. 4: Lifting door
Fixing AZ 15 zvr to the cross strut (40-40)

Accessories

Safety switch AZM 161

- For safely switching off circuits. Suitable for hinged, sliding and lifting doors.



Technical data:
Self-extinguishing fibreglass-reinforced thermoplastic.
Degree of protection: IP67 to IEC 529/EN 60529/DIN VDE 0470-1
Contact type: One-pin, double-breaking, positively driven NC to VDE 001, additional contacts for signal purposes
Pivot radius: R_{min} 900 mm

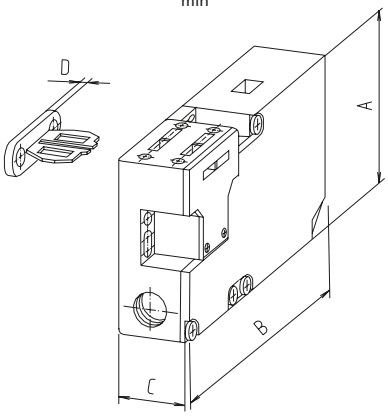

Constant current:
10 A Rated operating current
Iu AC 11h 2 A (230 V)
Short circuit resistance:
6 A (slow) as positively driven NC position switch
Contact type: One-pin, double-breaking, positively driven NC to VDE 001, additional contacts for signal purposes
Pivot radius: R_{min} 900 mm
Constant current: 10 A Rated operating current Iu AC 11h 2 A (230 V)
Short circuit resistance:
6 A (slow) as positively driven NC position switch
Positive opening travel/force:
8.8 mm / 10 N
Locking force Fmax: 2000 N
Mech. lifetime:
$10x10^6$ switching cycles
Operating temperature:
-25 to +60°C.

Code No.	Type	A	B	C	D
4010650	Switch AZM 161, for sliding door/lifting door/hinged door	90	130	30	5

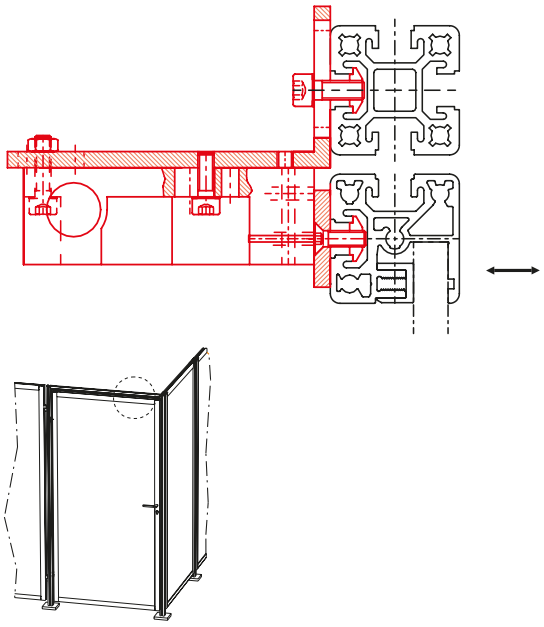

Fig.1: Hinged door
Fixing AZM 161 to the top strut (40-40)

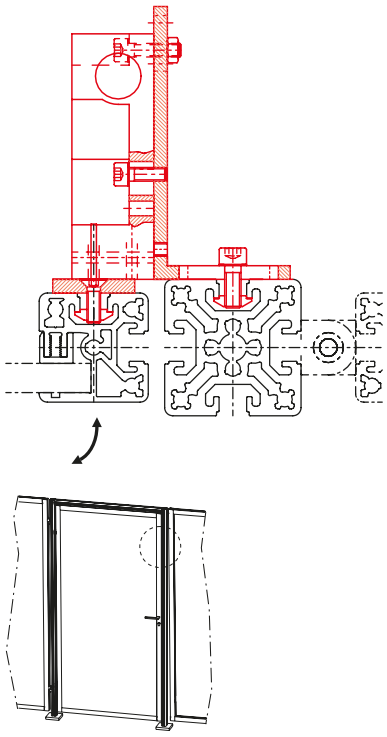

Fig.2: Hinged door
Fixing AZM 161 to the side strut (40-50)

Panels

- For doors, cladding, safety and table tops
- Cut to specification
- Further panels available on request

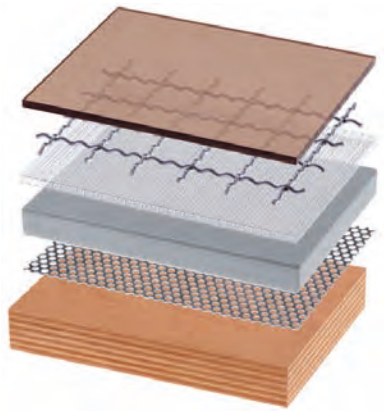

Code No.	Type	Thickness	Version	Max. size [mm]	Weight [kg/m²]
4018584	Makrolon	2 mm	Clear	3.050 x 2.050	2.40
4018586	Makrolon	4 mm	Clear	3.050 x 2.050	4.80
4018576	Makrolon	6 mm	Clear	3.050 x 2.050	8.00
4018579	Makrolon	6 mm	Brown tinted	3.050 x 2.050	8.00
4018578	Makrolon	10 mm	Clear	3.050 x 2.050	13.00
4018582	Acrylic glass	4 mm	Clear	3.050 x 2.050	4.80
4018595	Acrylic glass	5 mm	Clear	3.050 x 2.050	6.00
4018563	Acrylic glass	5 mm	Blue, transparent	3.050 x 2.030	6.00
4018575	Acrylic glass	6 mm	Clear	3.050 x 2.050	7.20
4018577	Acrylic glass	10 mm	Clear	3.050 x 2.050	13.00
4012576	Trespa	6 mm	Brown	2.050 x 2.130	8.40
4012586	Trespa	6 mm	Silver-grey	3.050 x 1.530	8.40
4012587	Trespa	10 mm	Silver-grey	3.050 x 1.530	13.00
4018570	Koematex	6 mm	White	3.050 x 2.030	4.20
4018571	Koematex	8 mm	White	3.050 x 2.030	5.60
4018572	Koematex	10 mm	White	3.050 x 2.030	6.00
4012579	Multiplex	30 mm	Untreated	2.500 x 1.500	27.00
4015573	Aluminium	2 mm	Clear anodised	2.000 x 1.000	5.40
4012582	Table top	19 mm	Grey plastic-coated, glued edges	2.000 x 2.075	14.70
4012577	Composite	6 mm	Clear anodised	3.050 x 1.500	7.30
4012511	MDF panel	6 mm	Untreated	2.000 x 2.075	5.00
4012512	MDF panel	8 mm	Untreated	2.000 x 2.075	6.60
4016576	Perforated plate	1 mm	Round holes in staggered rows, galvanised steel	1.000 x 2.000	4.30
4016577	Wire mesh 20x20	2.5 mm	Galvanised steel	2.000 x 1.000	2.40
4016578	Wire mesh 30x30	3 mm	Galvanised steel	2.000 x 3.000	3.70
4016579	Wire mesh 40x40	3.8 mm	Galvanised steel	2.000 x 3.000	4.70

Fax enquiry

RK Rose+Krieger GmbH
Potsdamer Straße 9
32423 Minden/Germany
Telephone: (0571) 9335-0
Fax: (0571) 9335-119
E-Mail: anfrage.vertrieb@rk-online.de

Date:.....

Customer number: .....
Company: .....
Project: .....
Telephone: .....
E-Mail: .....
Contact:.....
Department: .....

Sketch/description:

Safety guard ☐
Protection system ☐

Height details
2200 mm ☐ 1600 mm ☐
2000 mm ☐ .....mm ☐

Please give details of the module version, panels and doors in the sketch.

Submission of offer / date: .....

Remarks: .....

.....



RK Easywork

Assembly workstation system

The configurable workstation system was developed to meet ergonomic and task-specific requirements, based on the complete RK Rose+Krieger modular system.





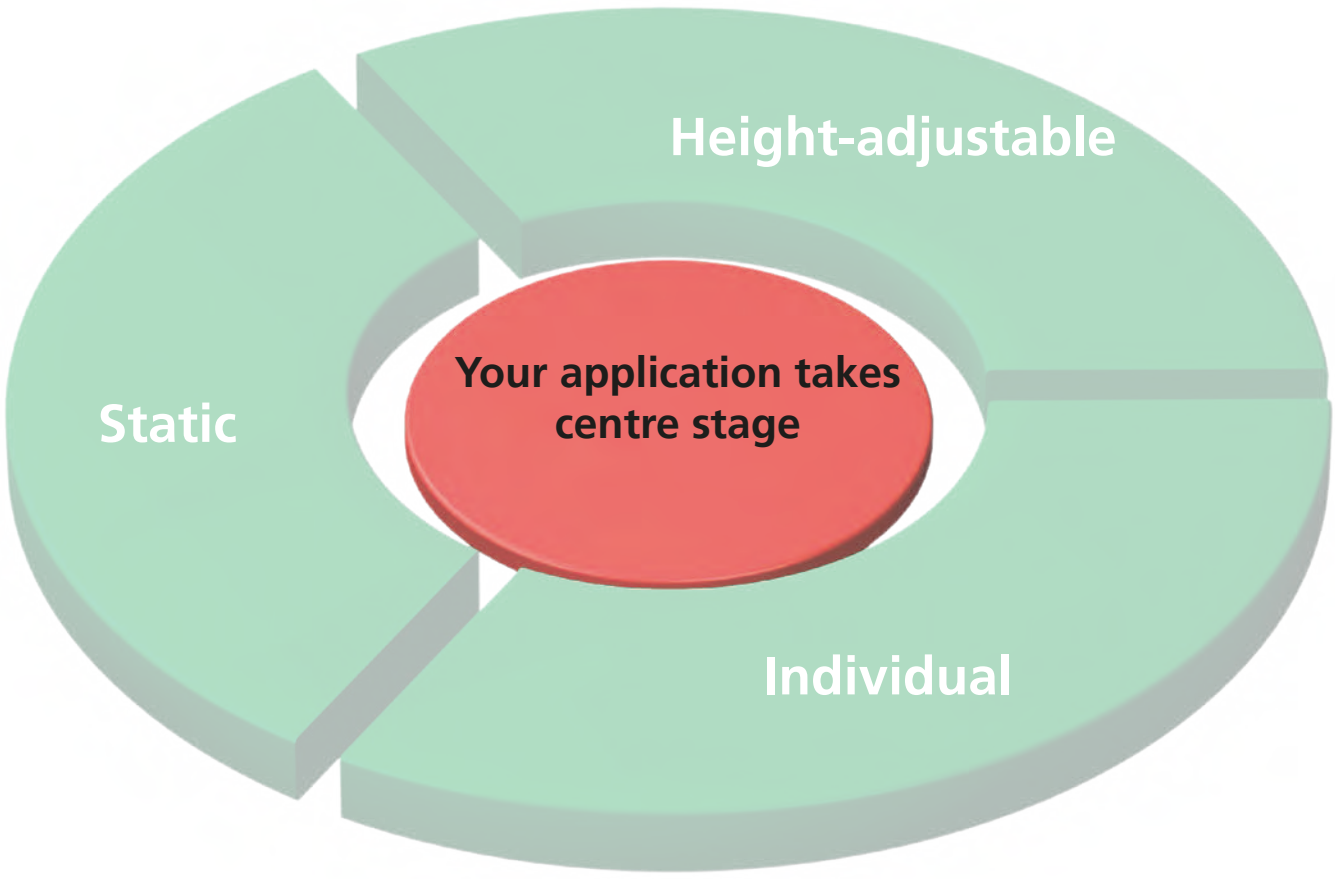

Features:

- Select the ideal workstation online quickly and easily
- Two basic types: static and height adjustable
- Wide range of accessories
- Send selection enquiry with the click of a mouse

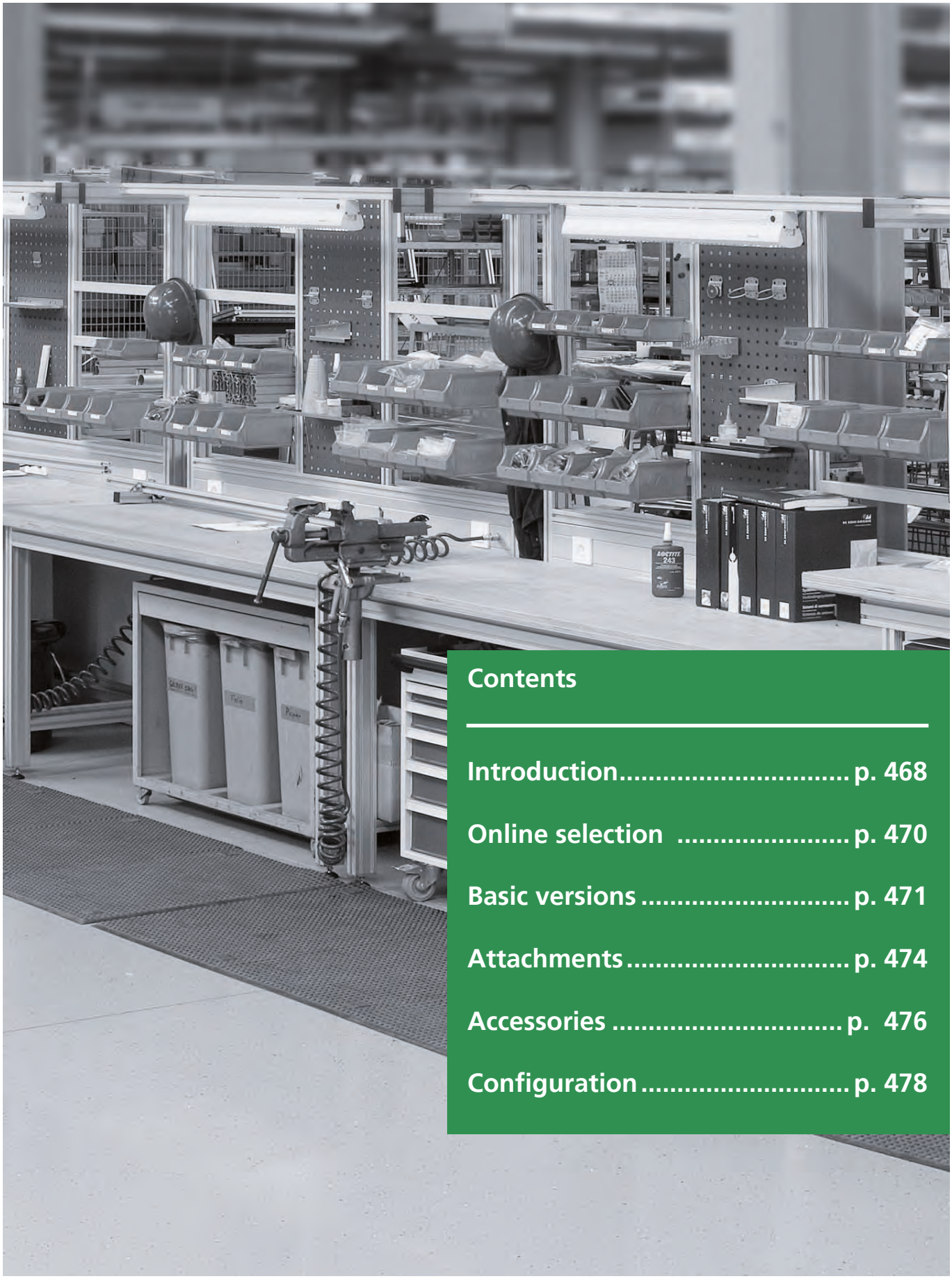

Contents

Introduction ..... p. 468
Online selection ..... p. 470
Basic versions ..... p. 471
Attachments ..... p. 474
Accessories ..... p. 476
Configuration ..... p. 478

RK Easywork

Assembly workstation system

Selecting work tables online

With the RK Easywork selection tool, a complete assembly work table can be configured online to meet ergonomic and task-specific requirements.

Step by step, the selection tool guides you through all of the options on the way to creating your ideal workstation.

Additional lighting, holders for grab containers, foot rests, standing chairs and ESD accessories are all available, along with other useful devices.

The RK Easywork workstation system is based on RK Rose+Krieger's complete modular system.

BLOCAN® Structural profiles made from aluminium and the electrically driven lifting columns offer a perfect combination for the creation of high-quality table concepts.

Customers can choose between the simplest static tables or electrically height-adjustable work tables and configure their own combinations.

Ergonomic assembly workstations increase productivity and reduce physical strain.

Being able to adjust the table height to suit the individual operator minimises physical strain and leads to an appreciable increase in productivity of 5%-15% on average.

As a rule, the requirements to be met by an assembly workstation are highly diverse. Workpieces of varying sizes, shapes and weights in small and medium batch production, conversions/extensions of the production processes or modern LEAN workplaces demand a flexible system which can be individually configured or modified as necessary.

Our solution is as individual as your requirements. That is why, in addition to a range of standard tables, we also offer you expert advice and assistance in the implementation of your optimal assembly workstation.



Table of contents

RK Easywork

Online selection tool ..... from p. 470

Worktables ..... from p. 471

Attachments ..... from p. 474

Accessories ..... from p. 476

Configuration ..... from p. 478

RK Easywork

Assembly workstation system

The RK Easywork workstation system is based on RK Rose+Krieger's complete modular system.
We implement your ideas using our versatile RK product range.

PROFILE TECHNOLOGY



Mix'n'match

LINEAR TECHNOLOGY



Moving and positioning

CONNECTING TECHNOLOGY



Clamp and release solutions

BLOCAN® construction profiles made from aluminium and the electrically driven lifting columns offer a perfect combination for the creation of high-quality table concepts. Customers can choose between the simplest static tables or electrically height-adjustable work tables and configure their own combinations.
Are you interested in an assistance system? Contact us for further details.

Use our online configurator

- Quick and simple operation
- Selection of table systems and accessories
- Immediate generation of CAD data in native formats
- Quotations can be requested simply based on the selected components
- You receive a written quotation promptly



Work table: static

- Base frame made from profile 40 x 40 and 40 x 80
- Variable height (min. 750 mm max. 1250 mm), width and depth of the table
- ESD accessories available
- Different table top material options
- Optional portal which can be configured with accessories
- Various drawer cabinet versions



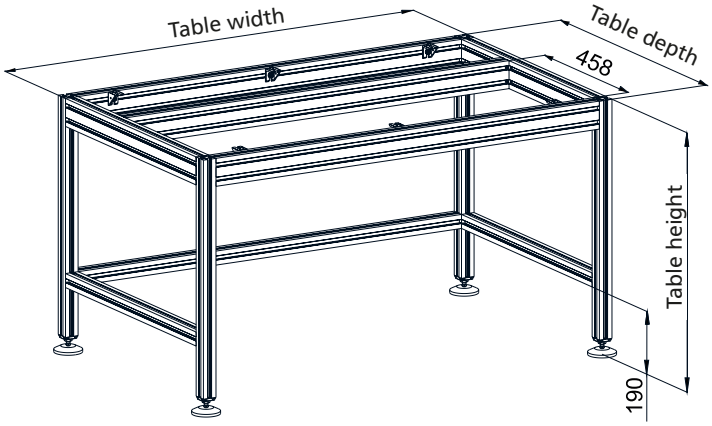

Code No.	Type RK Easywork table	Height max.	Width max.	Depth max.
W10M1_ _ _ _ _ _ _ _ _ _ _	Static / assembled	1250	2000	1200
W10U1_ _ _ _ _ _ _ _ _ _ _	Static / unassembled			
W11M1_ _ _ _ _ _ _ _ _ _ _	Static ESD / assembled			
W11U1_ _ _ _ _ _ _ _ _ _ _	Static ESD / unassembled			

3. Table depth
2. Table width
1. Table height

Assembly workstation system

Work table: electrically height adjustable with Multilift II

Multilift II ESD
(electrostatic discharge)



Multilift II impact
(integrated damping)



- Height adjustment using dual-column system (Multilift lifting columns), various designs
- Adjustment using 6-key hand switch/2-key hand switch and an electronic MultiControl synchronous controller
- Min. table height = 726 mm
  Max. table height = 1171 mm
- Wide range of configuration and equipment options, as with the static version



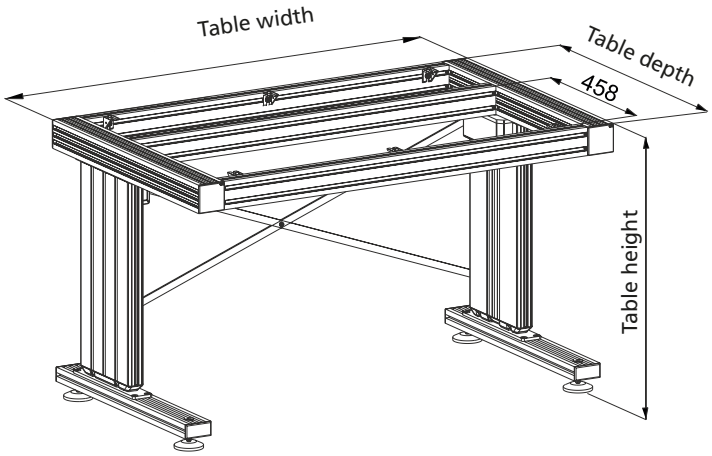

Code No.	Type RK Easywork table	Height min.	Height max.	Width max.	Depth max.
W12M11081_ _ _ _ _ _ _ _	ML II 355 assembled	726	1081	2000	1200
W12U11081_ _ _ _ _ _ _ _	ML II 355 unassembled	726	1081		
W12M11171_ _ _ _ _ _ _ _	ML II 400 assembled	771	1171		
W12U11171_ _ _ _ _ _ _ _	ML II 400 unassembled	771	1171		
W13M11081_ _ _ _ _ _ _ _	ML II 355 ESD assembled	726	1081		
W13U11081_ _ _ _ _ _ _ _	ML II 355 ESD unassembled	726	1081		
W13M11171_ _ _ _ _ _ _ _	ML II 400 ESD assembled	771	1171		
W13U11171_ _ _ _ _ _ _ _	ML II 400 ESD unassembled	771	1171		
W14M11090_ _ _ _ _ _ _ _	ML II 355 impact assembled	735	1090		
W14U11090_ _ _ _ _ _ _ _	ML II 355 impact unassembled	735	1090		
W14M11180_ _ _ _ _ _ _ _	ML II 400 impact assembled	780	1180		
W14U11180_ _ _ _ _ _ _ _	ML II 400 impact unassembled	780	1180		

3. Table depth

2. Table width

Work table: electrically height adjustable with Multilift II telescope

Multilift II telescope



Multilift II ESD
(electrostatic discharge)



- Height adjustment using dual-column system (Multilift lifting columns), various designs
- Adjustment using 6-key hand switch/2-key hand switch and an electronic MultiControl synchronous controller
- Min. table height = 728 mm
  Max. table height = 1378 mm
- Wide range of configuration and equipment options, as with the static version



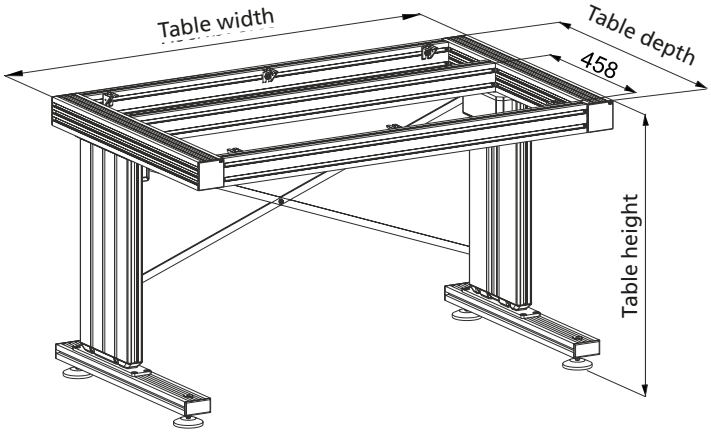

Code No.	Type RK Easywork table	Height min.	Height max.	Width max.	Depth max.
W15M11378_ _ _ _ _ _ _ _	ML II telescope assembled	728	1378	2000	1000
W15U11378_ _ _ _ _ _ _ _	ML II telescope unassembled	728	1378		
W16M11378_ _ _ _ _ _ _ _	ML II telescope assembled	728	1378	2000	1000
W16U11378_ _ _ _ _ _ _ _	ML II telescope unassembled	728	1378		

3. Table depth
2. Table width

Attachments

Standard version:
The attachments are supplied loose with the base table (includes assembly instructions).

Special version:
You receive your work table fully assembled with all the desired attachments.

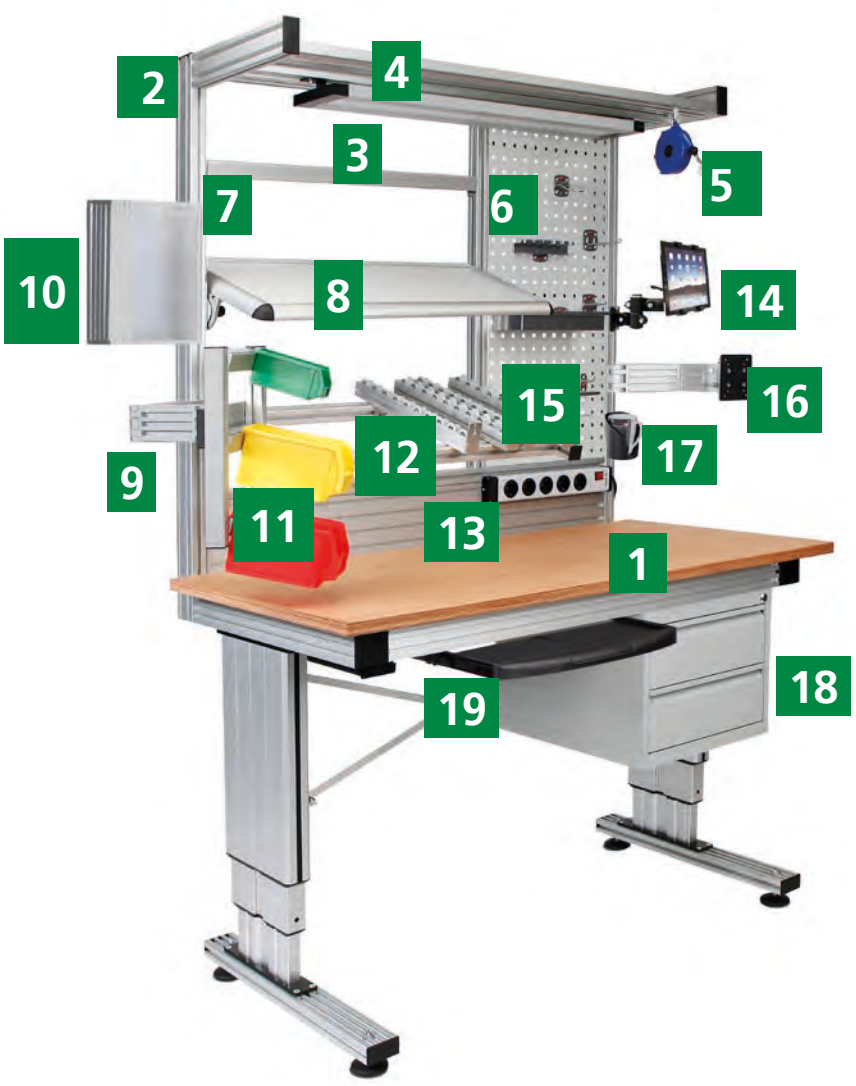

1	Table top			14	RK monitor mounting
2	Frame/gantry	8	Material tray level	15	Tool holder
3	LED lamp	9	Pivoting material rail	16	Monitor holder
4	Runner profile	10	Document holder	17	Cup and device holder
5	Balancer	11	Grab containers	18	Drawer cabinet
6	Perforated boards/tool holders	12	Rollenbahnen	19	Keyboard shelf
7	Tray level mounting rail	13	Power supply	20	PC holder

Attachments

RK ROSE+KRIEGER

Table top	Frame/Gantry	LED lamp	Runner profile
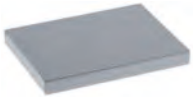 Laminated particleboard (HPL, MFB)  Beech multiplex panel			 Carriage
Balancer	**Perforated boards**	**Mounting rail**	**Material tray level**
			
Pivoting material rail	**Document holder**	**Grab containers**	**Roller conveyors**
			
Socket strips	**RK monitor mounting**	**Tool holder**	**Monitor holder**
			

Attachments / Accessories

BaCup and device holder	Drawer cabinet	Keyboard shelf	PC holder
			

ESD Accessories

ESD table mat	ESD wristband	ESD earthing box	ESD central earthing strip
	...with spiral cable 		

ESD earth bonding plug	ESD ESD earth conductor
	





RK Easywork

workstation configuration

☐ **Enquiry** ☐ **Order**

Table version static

☐ assembled ☐ unassembled
☐ ESD assembled ☐ ESD unassembled

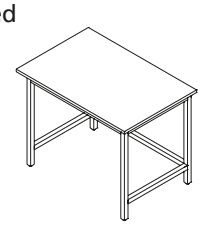

Height: _____ mm (min. 750-1250 mm max.)
Width: _____ mm (min. 750-2000 mm max.)
Depth: _____ mm (min. 650-1200 mm max.)

Table version electric height-adjustable

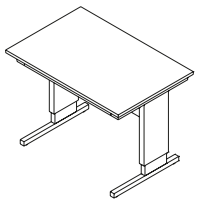

☐ Multilift II 350	☐ assembled	☐ unassembled
☐ Multilift II 400	☐ assembled	☐ unassembled
☐ Multilift II ESD 355	☐ assembled	☐ unassembled
☐ Multilift II ESD 400	☐ assembled	☐ unassembled
☐ Multilift II impact 355	☐ assembled	☐ unassembled
☐ Multilift II impact 400	☐ assembled	☐ unassembled
☐ Multilift II telescope	☐ assembled	☐ unassembled

Attachments

☐ **Standard version:** The attachments are supplied loose with the base table (includes assembly instructions).

☐ **Special version:** You receive your workbench fully assembled with all the desired attachments.

☐ Hand switch with display screen (6 function keys)
☐ Hand switch without display screen (2 function keys)
☐ Hand switch drawer

☐ IEC cable (Europe)
☐ IEC cable (Switzerland)
☐ IEC cable (United Kingdom)
☐ IEC cable (Japan, USA)

Worktop

☐ MFB particleboard (melamine)	22 mm
☐ HPL particleboard (laminated)	23 mm
☐ Beech Multiplex board	30 mm
☐ Beech Multiplex board	40 mm
☐ ESD table top	20 mm
☐ ESD table top	30 mm

Worktop: width _____, depth _____

Frame/Gantry

☐ completely mounted frame/gantry
☐ unmounted components

Height (min. 328-2000 mm max.): _____
Width (max. table width): _____
Depth (min. 300-1200 mm max.): _____

☐ LED lamp
☐ Runner profile (table width -80 mm):
☐ Balancer, load capacity (min. 0.5-1.5 kg max.) _____
☐ Balancer, load capacity (min. 1.5-3.0 kg max.)
☐ Balancer, load capacity (min. 3.0-4.0 kg max.)
☐ perforated board(s) (1-2 units, 450 x 1000 mm each)
☐ mounting rail(s) for grab containers (1-3 units)
☐ Material tray level angle adjustment
☐ Material tray level steel swivel
☐ 1 pivoting material rail (load capacity max. 10 kg)
☐ 3 pivoting material rails (load capacity max. 20 kg)
☐ Document holder

___grab container(s) (170 x 100 x 50) ☐red ☐blue ☐green ☐yellow
___grab container(s) (160 x 100 x 75) ☐red ☐blue ☐green ☐yellow
___grab container(s) (230 x 150 x 122) ☐red ☐blue ☐green ☐yellow
___Roller conveyor(s) length: _____
___Roller(s) with flange, purchase only in lot sizes 10, 20, 30... pcs
___Roller(s) without flange, purchase only in lot sizes 10, 20, 30... pcs
___End plate(s) 40 x 40 x 5 ___ End plate(s) 40 x 80 x 5
___Slot stone -N-, purchase only in lot sizes 10, 20, 30... pcs
☐Socket strip, centrally switched
☐Socket strip, individually switched
☐Socket strip, non-switchable

RK monitor mounting

☐With rotary flange ☐With ball joint ☐Compact
☐Connecting plate Vesa 50/75 ☐Connecting plate Vesa 75/100
☐Profile console ☐Wall console
☐Reducing bush "R" ☐Reducing bush "V"
☐Vario-Quick holding block type K
☐Vario-Quick holding block type KK
☐Monitor holder aluminium (page 26)

Tool holder

☐With inclined hook end ☐Double, with inclined hook end
☐Magnetic holder, D=40 ☐Pliers holder, W=55/D=20
☐Machine holder, D=60 ☐Grab container holder
☐Tool holder for self-service packaging
☐Screwdriver holder, 8x
☐Screwdriver holder ☐Round tin holder
☐Hexagon socket key holder,D=1-11 ☐Storage box
☐Shelf plate, W=350/D=125
☐Cup and device holder, open
☐Cup and device holder, closed

Drawer cabinet

☐with 1 drawer 230 x 460 x550 mm
☐With 2 drawers 380 x 460 x 550 mm
☐with 3 drawers 380 x 460 x 550 mm
☐Keyboard shelf ☐PC holder

Accessories

☐ESD table mat 900 x 610 mm ☐ESD table mat 1220 x 610 mm
☐ESD wristband ☐ESD spiral cable 2.4 mtr.
☐ESD earthing box ☐ESD central earthing strip
☐ESD earth bonding plug 2.0 mtr. standard cable
☐ESD earth bonding plug 2.4 mtr. spiral cable
☐ESD earth conductor 1.5 mtr. cable
☐ESD earth conductor 3.0 mtr. cable

___ Slot stone(s) -F-, purchase only in lot sizes 10, 20, 30... pcs
___ Slot stone(s) -K-, purchase only in lot sizes 10, 20, 30... pcs
___ Slot stone(s) -R-, purchase only in lot sizes 10, 20, 30... pcs
___ Slot stone(s) PA -R-, purchase only in lot sizes 10, 20, 30... pcs
___ Slot stone(s) PA -F-, purchase only in lot sizes 10, 20, 30... pcs
___ Slot stone(s) PA -K-, purchase only in lot sizes 10, 20, 30... pcs

Attention: lot sizes

___ Vario-Quick cable bracket(s) 15 HF
purchase only in lot sizes 10, 20, 30... pcs
___ Vario-Quick cable bracket(s) 25 HF
purchase only in lot sizes 10, 20, 30... pcs
___ Vario-Quick cable bracket(s) 35 HF
purchase only in lot sizes 10, 20, 30... pcs
___ Hook and eye cable tie(s),
purchase only in lot sizes 5, 10, 15... pcs

Cover profile(s) 2 m bar

___ Plastic, black RAL 9005
___ Plastic, white aluminium RAL 9006
___ Plastic, light grey RAL 7035
___ Plastic, rape yellow RAL 1021
___ Plastic, traffic red RAL 3020
___ Plastic, signal blue RAL 5005
___ Aluminium

Sketch/description:

RK Rose+Krieger GmbH
Potsdamer Straße 9
32423 Minden/Germany
Telephone: (0571) 9335-0
Fax: (0571) 9335-139
E-Mail: anfrage.vertrieb@rk-online.de
Datum: .....

Customer number: .....
Company: .....
Project: .....
Telephone: .....
E-Mail: .....
Contact: .....
Department: .....

Appendix



Contents

Tools ..... p. 482

PART Community ..... p. 490

Fax enquiry ..... p. 491

Application examples ..... p. 492

Index ..... p. 496

Tools

Marker template for panels

Marker template for machining panels in hidden bracket and flange bracket connections

Material: White plastic.



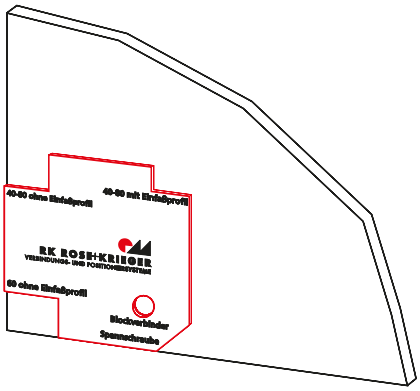

Code No.	Type
4010590	Marker template, profiles/accessories: construction and functional profiles sections

Marking punch for hidden screw and clamping profiles

Marker aid for drilling holes in the centre of the profile slot. For example, for corner joints for clamping profiles, hidden screw sets, etc.

Material: Galvanised steel, hardened punch point.



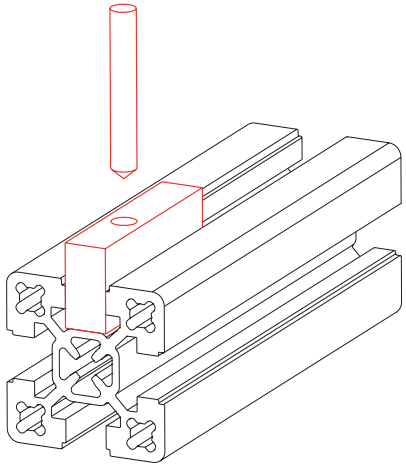

Code No.	Type
4016511	For profiles/accessories in the sections Structural Profiles and Functional Profiles
E01026CEE	For profiles of 20 series in the section Functional Profiles
E03026CEE	For profiles 20x40 in the section Functional Profiles

Drilling fixture for hidden screw -B-

Fixture for drilling central holes; for example, when using the hidden screw set.

The individual profile size can be set using the variably adjustable stop pin.

For profile:
40x40, 40x80,
50x50, 60x60,
80x80

Material: Aluminium

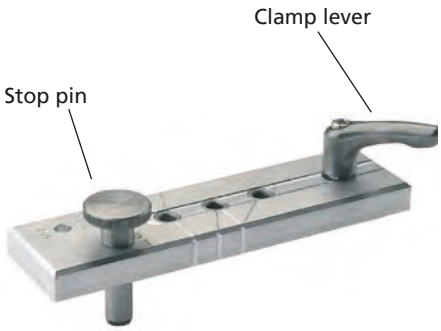

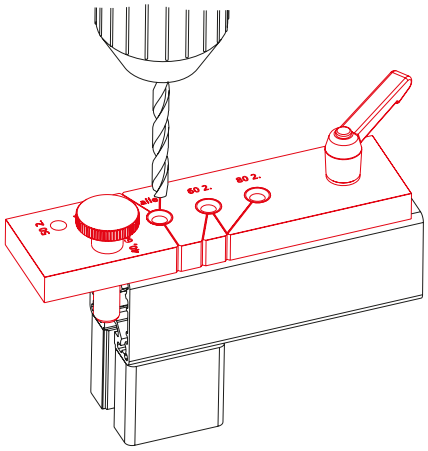

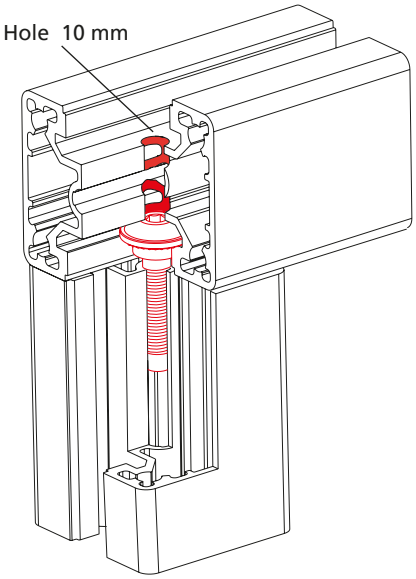

Code No.	Type
4016516	Drilling fixture

Tools

Drilling fixture for slot stone -N-

Often, after the profile construction has been assembled, various accessories have to be mounted. To avoid having to dismantle the profiles (in order to insert the slot stones -N- from the side), a hole is drilled in the centre of the slot. This drilling fixture makes it easier to work on the profiles and to drill accurately.

Includes: Drilling fixture with clamping device and 3-blade countersink Ø 20 mm.
Material: Aluminium



Code No.	Type
4016514	Complete drilling fixture

Opening the profile slot

When designing the G-profiles, great attention was paid to ensuring that the hidden profile slots could be used if necessary.

This is done by simply pressing out the slot cover, allowing accessories to be mounted or profile connections to be made without any difficulty.

Material:
Vibration finished aluminium

Drill and press for G-profiles

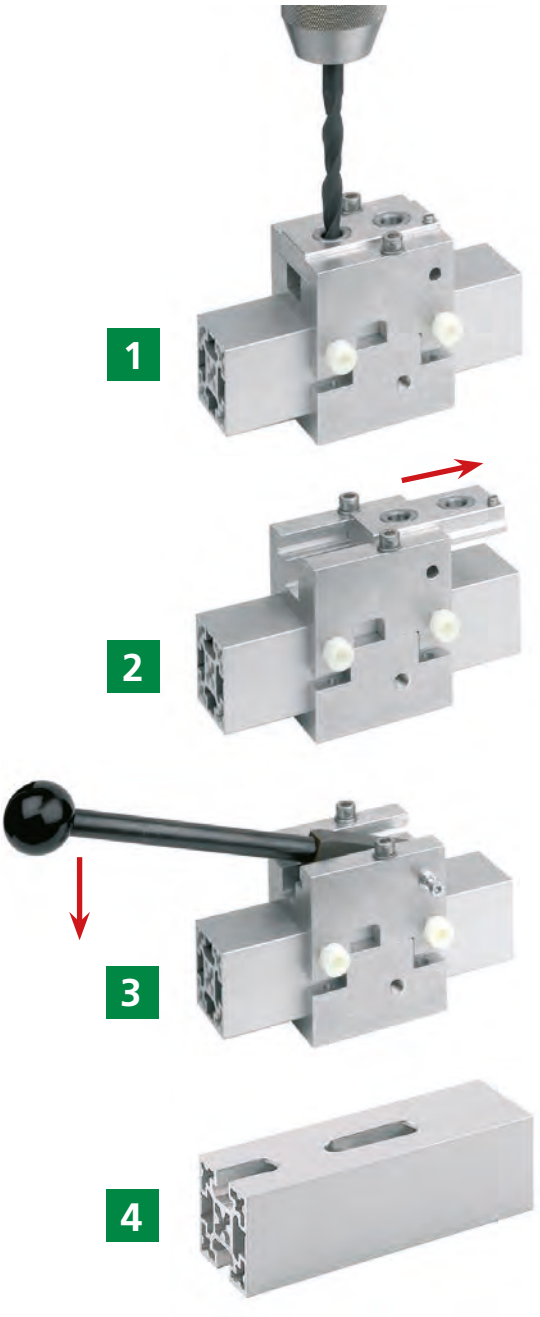

1.) A hole is drilled in the required position at the ends. For mounting accessories, two bushings are provided a set distance apart.

2.) Then the drill guide is removed.

3+4.) The profile slot is pressed out with a punch.

Code No.	Type
4006651	Drill and press 40
4006653	Drill and press 80

Material data / tolerances

Material data

Manufacturing method:	Artificially aged extruded profile
Material:	EN AW 6063 T66
Material number:	3.3206.72
Tensile strength:	245 N/mm2
0.2% - yield strength:	200 N/mm2
Elongation at break A:	8%
Elongation at break A50:	6%
Modulus of elasticity:	70000 N/mm2
Shear modulus:	28000 N/mm²
Brinell hardness:	Approx. 70 hours
Surface:	Quality P6 C0 (matt pickled and natural anodised)
Anodised layer:	To DIN 17611 Class 10
Anodic hardness	250 HV

Profile tolerances

(on delivery)

Our RK system profiles are manufactured and tested to DIN EN 12020-1 (Technical Conditions for Inspection and Deliveyr) and DIN EN 12020-2 (Tolerances on Dimensions and Form) and the D-profiles to DIN EN 755-9.
The straightness tolerance is listed in the following table.
In addition to the straightness tolerance H, the maximum permitted deviation h over a length l of 300 mm is 0.3 mm (for D-profiles: 0.6 mm).
As well as the straightness tolerance, wall thickness, evenness and tilting tolerances as well as form deviations are possible based on DIN EN 12020 Part 3 (see the following page also).
However, we would point out that our profiles surpass the DIN standard and generally conform to much tighter tolerances.
Saw cuts are executed with a deviation of ±10'.

Length tolerance in profile cut lengths: nominal measurement ± 0.1 mm/m.

Our 6000/6300 mm long profile bars have an overmeasure of approx. 80 mm. This is required for the anodisation process and can be sawn off by the customer if necessary.

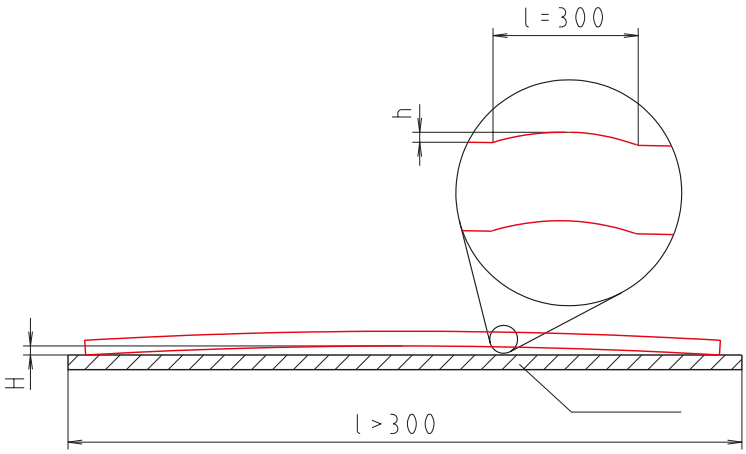

Length [m]	to 1	to 2	to 3	to 4	to 5	to 6
Tolerance H [mm]	0.7	1.3	1.8	2.2	2.6	3.0
D-profile tolerance H [mm]	1.0	2.0	3.0	4.0	5.0	6.0

Profile tolerances

Max. perm. torsion 0.7 mm over 1 m. D-profiles as of size 80x240: 1 mm over 1 m.

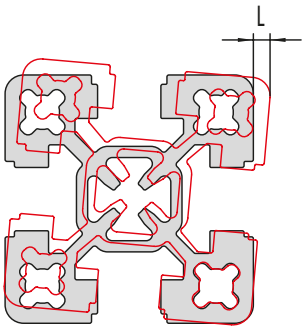

Max. perm. angle tolerance 0.2 mm over 40 mm corresponds to approx. 0.29°.

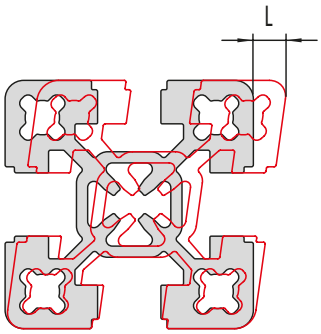

Maximum deviation from parallelism 0.2 mm.

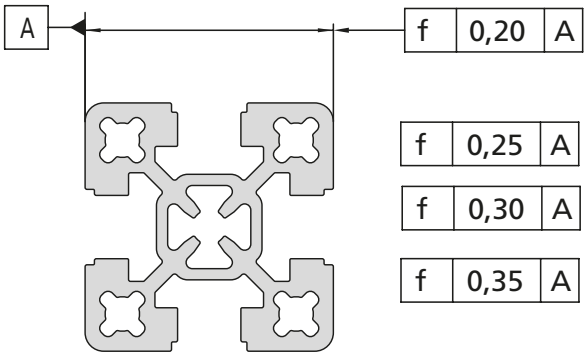

f 0,25 A	D-80x160, D160x160, D-160x240
f 0,30 A	D-160x240
f 0,35 A	D-160x320

Profile powder-coating

We offer the option of coating the profiles in the listed RAL colours.

- White aluminium RAL 9006
- Light grey RAL 7035
- Rape yellow RAL 1021
- Traffic red RAL 3020
- Signal blue RAL 5005
- Black RAL 9005

Further RAL colours available on request.

Deflection / twisting angle

Load data

To calculate the deflection of BLOCAN® aluminium profiles in different load scenarios, we must distinguish between 3 different load scenarios:

1. Profile clamped firmly in place at one end

2. Profile placed on bearings at both ends

3. Profile clamped firmly in place at both ends

Before the deflection can be calculated, first the user must determine which of the 3 load scenarios applies.
Then the user can begin calculating the deflection.
However, it is possible to work out a missing value by solving the mathematical formulas for the missing variables (e.g. finding out the suitable profile if you know e.g. the max. deflection and forces in play).

As well as bending stiffness, a profile's resistance to torsion within a structure is often highly important.
In the case of high torsion stress, the function of the components can be greatly compromised by elastic deformation. For this reason, a torsionally stiffer profile should be used well before the permitted shear stress is reached.

Deflection calculation (purely in mathematical terms)

Given: f= ? Deflection
F= 8000 N Load
L= 700 mm Free length
I= 11.2 cm^4 Geometric moment of inertia of profile F-40x40
E= 70000 N/mm^2 Modulus of elasticity for all profiles

Load scenario 1

$$f = \frac{F \times L^3}{E \times I \times 3 \times 10^4} = \frac{8000\ N \times 700^3\ mm^3}{70000\ N/mm^2 \times 11.2\ cm^4 \times 3 \times 10^4} = 116.67\ mm$$

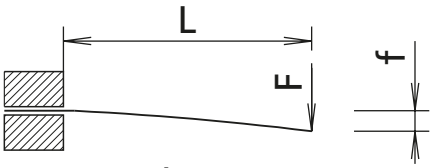

Load scenario 2

$$f = \frac{F \times L^3}{E \times I \times 48 \times 10^4} = \frac{8000\ N \times 700^3\ mm^3}{70000\ N/mm^2 \times 11.2\ cm^4 \times 48 \times 10^4} = 7.29\ mm$$

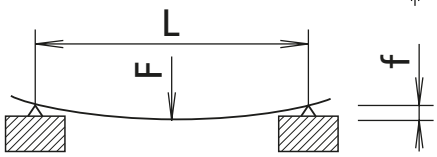

Load scenario 3

$$f = \frac{F \times L^3}{E \times I \times 192 \times 10^4} = \frac{8000\ N \times 700^3\ mm^3}{70000\ N/mm^2 \times 11.2\ cm^4 \times 192 \times 10^4} = 1.82\ mm$$

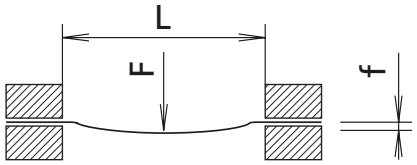

PART Community

Component library



For online access
Enter the required details in the fields marked * to set up your account.

RK Rose+Krieger provides CAD data online (www.rk-rose-krieger.com,menu service) for you to download free of charge.

Once you set up your account, you can generate the component of your choice in the CAD format required with the click of a mouse.

You can choose to receive your selected CAD models by e-mail or download.

As well as BLOCAN® Profile Technology, Linear Technology, Drive Technology and Connecting Technology are available in neutral and native CAD formats.

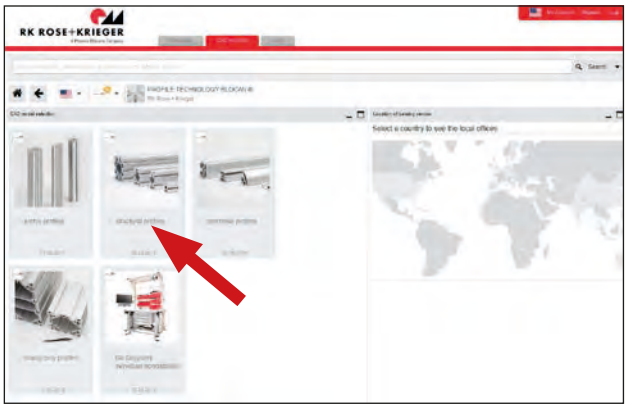

Select product segment

Link to our CAD component library:

www.rk-rose-krieger.com/english/service/cad-data

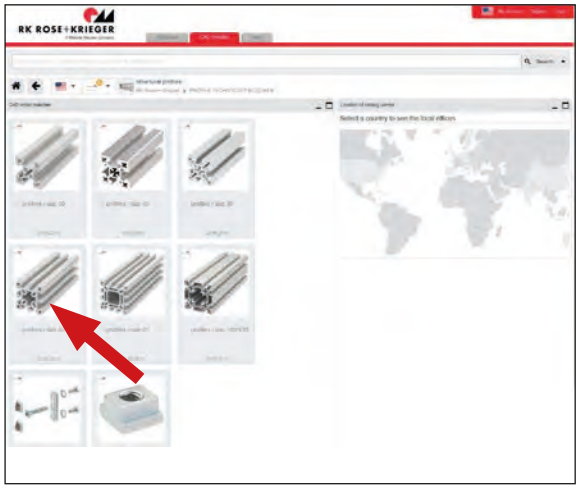

Select and, if required, configure components (e.g. length, version)

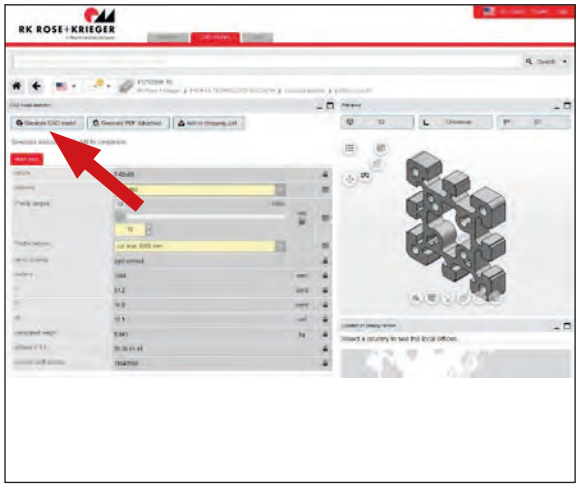

Generate the CAD data

Fax: +49 (0)571 9335-119
Telephone: +49 (0)571 9335-0
E-mail: anfrage.vertrieb@rk-online.de

Company ..... **Cust. No.** .....

Street ..... **City** .....

Telephone ..... **Fax** .....

Contact ..... **Dept.** .....

Application examples

Assembly tables with height-adjustable worktop.
Profile Assembly System frame, Multilift height adjustment (see Linear Technology catalogue).
The Multilift guide profiles are the special profiles 230x37 and 260x48.

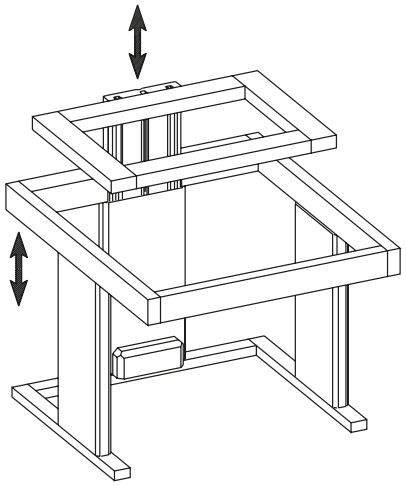

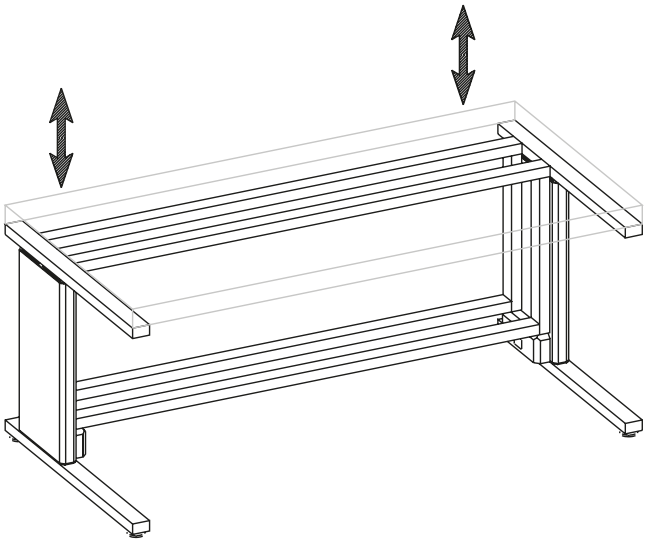

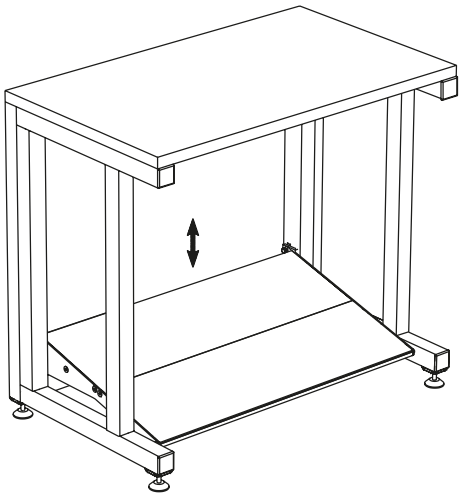

Work table with height adjustable foot rest FSH
(see page 138)

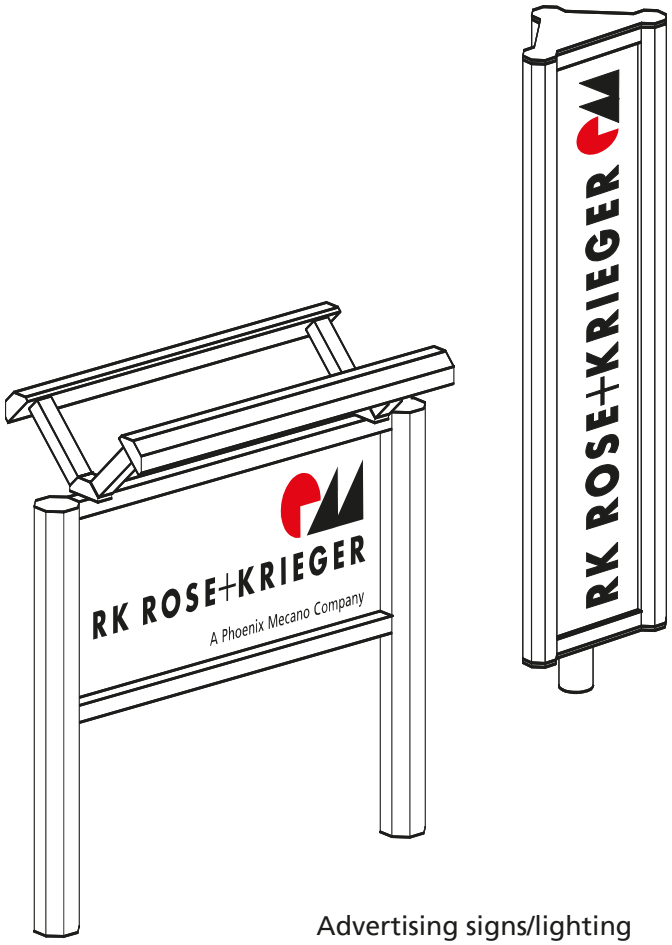

Advertising signs/lighting

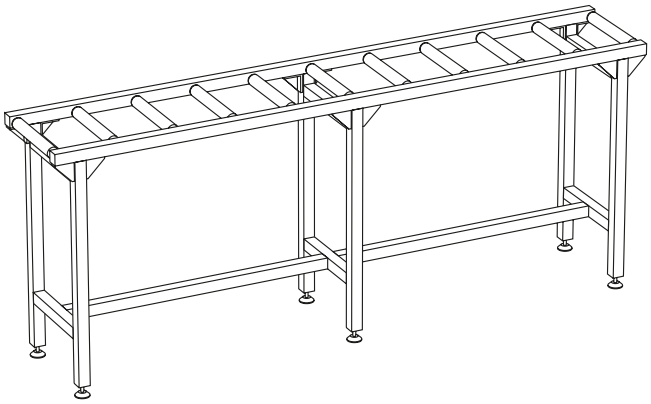

Roller conveyor made from Profile Assembly System components

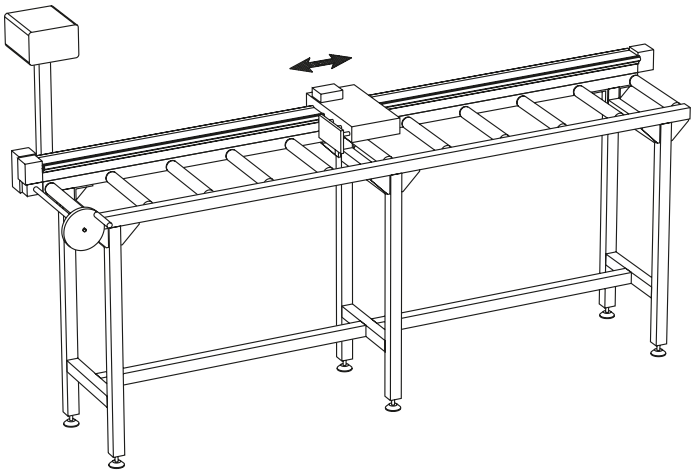

Saw fence combined with roller conveyor.
Option: Handwheel fence adjustment, pneumatic cylinder fence locking, digital length display

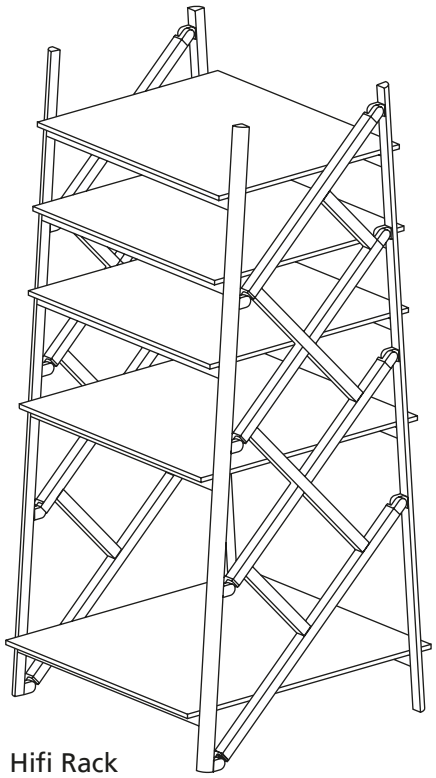

Hifi Rack

Application examples

Work tables

The different work table variants can be used as a template for your fax enquiry.
Please give the desired dimensions, profile cross-sections and panels.
For fax enquiry, please see page 491

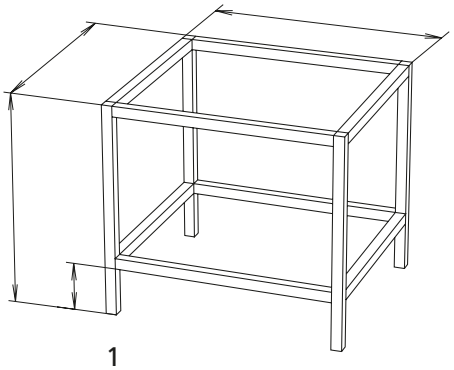

1

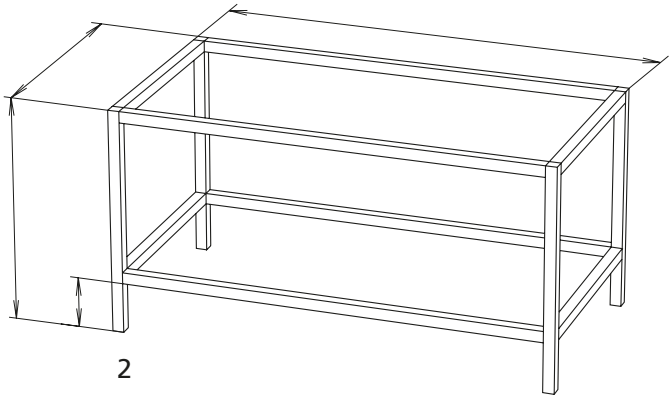

2

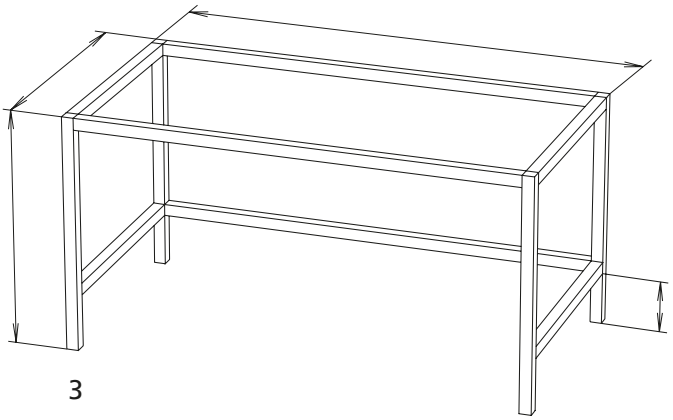

3

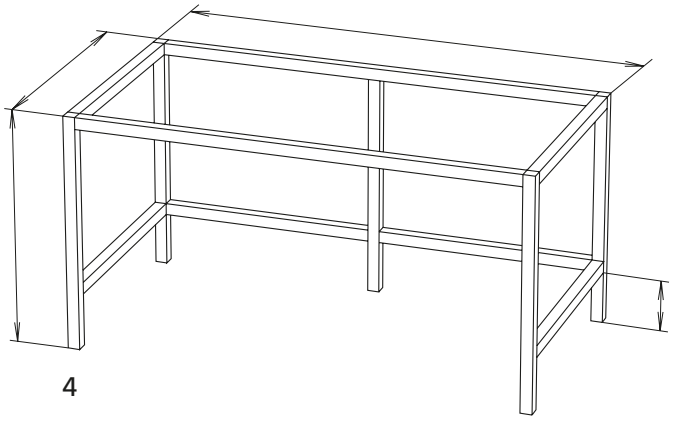

4

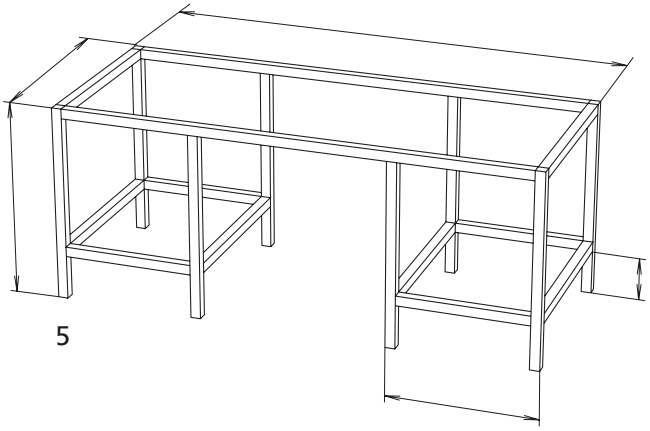

5

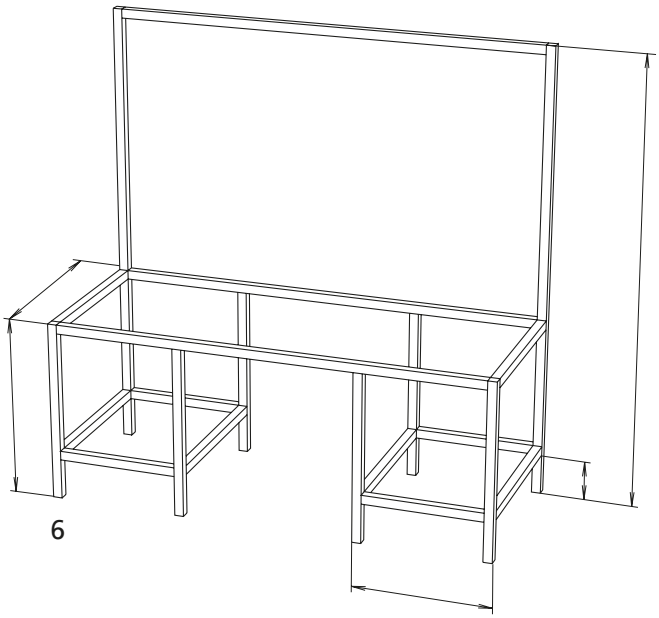

6

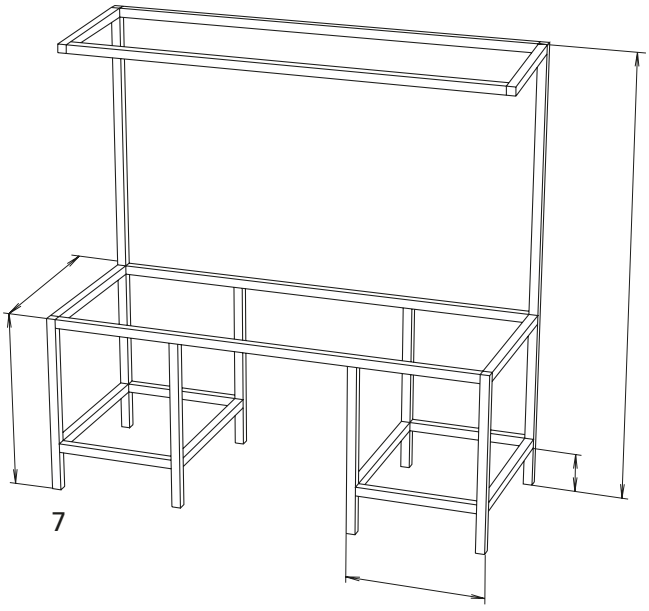

7

Index

A

Accessories 85, 253, 379, 440
Adapter slot stone 398
Angle bracket 60, 64, 231, 234, 351, 367, 390
Assembly strip 168, 171, 338, 341

B

Ball catch 148, 318, 321, 373, 450, 453
Bar material 92, 260
Base bracket 133, 301
Base clamp FVV 134, 302, 440
Base plate 132, 300, 407
Block joint 116, 284
Bracing plate 54, 226, 391, 446
Butt hinge 142, 312, 355, 369, 448

C

Cable channel system 166-171
CAD component library 6
Caps 98, 266, 359, 375
Choosing a system 412
Clamp FKV / FV 133, 301
Compatibility connector 53, 225
Component library 490
Connecting plate 56, 81, 228
Connecting plate for feet 394, 406
Connecting plate for levelling feet 128, 296
Connection element 82
Connection element -S- 83
Connection techniques 47, 219, 387
Conveying elements 162, 332
Conveyor drums 162, 332
Conveyor rollers 162, 332
Corner clamp WV 65, 235
Corner joint 236, 237, 238, 346, 348, 442,443
Corner piece 108, 110, 276, 278
Cover caps 375
Cover plate 170, 340, 402
Cover profile 101, 269, 356, 403, 446
Cross clamp KV 69, 243
Cross connections 68, 242, 392

D

Door gap seal 102, 270, 447
Door lock -KL- 310, 456
Door stopper 154, 323, 455
Double profile joint 73, 74, 247, 248
Double-winged hinged door 424
Drilling fixture 483, 484

E

Edge protection 171, 341
Embedding U-profile 111, 279
End plate 100, 268
Equipotential bonding 171, 341
Equipotential bonding cable 92, 260
Eye bolt 127, 295

F

Fax enquiry 464, 491
Feet 124-138, 292-306,404
Fittings 140-158, 308-328
Fixed castor 137, 305
Fixing bolt 441
Flange bracket adaptor 345
Flange bracket connection 48, 220, 344
Flange bracket M-BLOCAN 345
Flange brackets 50, 222
Foot rest FSH 138, 306
Foundation bracket 298
Frame corner joint 113, 281
Frame joint 2x40 ..... 72, 246
Frame joint 3x40 ..... 72, 246
Frame profile 112, 200-211, 280
Framing profile 108,110, 276, 278
Functional profiles 174-375

G

G-connector 364
Grommet 170, 340

H

Handle 154, 155, 323, 324, 354, 374, 455
Handle profile 155, 324, 374
Handrail 155, 324
Heavy duty profiles 376-407
Hidden screw set -B- 224
Hinged door 423
Hinges 2-part 369
Hinges 3-part 369

I

Infovan 6

K

Keyed clamp connector -P- 80, 395
Keyed clamp connector -Q- 68, 242, 392

L

Levelling foot 127, 295, 368, 404
Lever cylinder lock 148, 318
Lifting door 426
Lift off hinge -aluminium- 144, 314, 448
Lift off hinge -plastic- 145 315

M

M-BLOCAN® 214-216
M-BLOCAN® accessories 342-359
Magnetic lock 149, 150, 319, 320, 355, 372, 374, 451, 452
Marker template 482
Material data 486
Membrane grommet 170, 340
Mitre joint -L- 80
Mitre joint -transversal- 68, 242, 342
Mitre joint -transverse- 352
Mitre joint -W1- 75, 249
Mitre joint -W2- 75, 249
Modular system 416-426

O

Online configurator 470
Opening the profile slot 485
Our product ranges 5

P

Panels 106, 274, 463
Parallel connections 80-82, 395
PART Community 490
Phoenix Mecano 4
Pillar 418
Pneumatic connecting plate 165, 335
Pneumatic connection 164, 335
Press mount connector 384, 388
Profile angle bracket 58, 229, 350, 354
Profile covers 96-102, 264-270, 402
Profile joint 74, 248, 354
Profile joint -E- 73, 247
Profile seal 114,115, 282, 283, 447
Profiles / size 30 28-30
Profiles / size 40 32-34
Profiles / size 50 36
Profiles / size 60 38
Profiles / size 80 40-43
Profiles / size 100/120 44-45

Q

Quick cable bracket 121, 289

R

Right-angle connections 46-64, 218-238, 388-391
Rim 102, 270, 447
RK Easywork 466-479
RK expansion screws 95, 263
RK profile circle 12
RK website 6
Roller carriage 334, 459
Roller module 458

S

Safety distances 414
Safety guards 408-464
Safety switch AZ 15zvr 156, 326, 460
Safety switch AZM 161 ..... 158, 325, 462
Screws 95, 263, 353
Self tapping screw 171, 341
Separating strip 171, 341
„Slam Latch Compact“ 454 ..... 153, 322, 454
„Slam Latch PRO“ 454 ..... 152, 322, 454
Sliding door 425
Sliding door profile 122, 206, 211, 290, 437
Sliding piece 163, 333
Slot geometry 26,178
Slot stone -B- / PLM 353
Slot stone -L/E- II 52, 224
Slot stones and screws 84-95, 254-263
Special profiles 212-217
Spring strips 170, 340
Steel swivel 76, 250
Steering roller 136, 304
Support 441
Supporting/Levelling shims 134, 302, 419
Surface elements 342
Suspended sliding block 94, 262

T

T-head bolt 86, 254
Tools 482-485
Tube clamp 120, 288

V

Vario-Quick holding block K/KK 120, 288, 357
Vario-Quick holding block L 119, 287
Vario-Quick holding block R 118, 286,
Vario-Quick holding block S 118, 286, 357, 367
Visible profiles 182-199

Whilst every effort has been made to ensure that the information in this catalogue was correct at the time of publication, no responsibility can be accepted for any errors or omissions.
This catalogue supersedes all previous catalogues. In the interest of further technical development, we reserve the right to make modifications without prior notice.
You can download all the latest catalogue data at our web site.