Twin tube actuator – EP(X)

The robust twin tube unit – compensates for high bending moments during hand and motor-driven adjustments

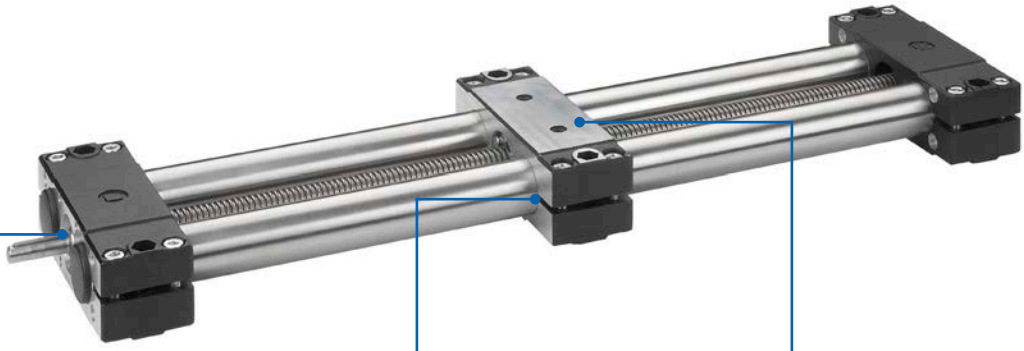

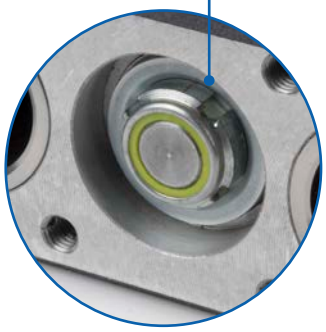

Screw with choice of slide bearing or ball bearing

✓ Ideal for use in environments with fine dust/abraded particles due to slide bearings

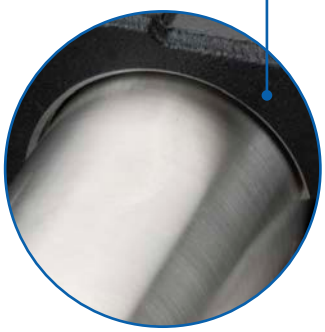

Carriages available with optional slide bushing

✓ Lower input torque at shaft

✓ Wear minimised on carriage

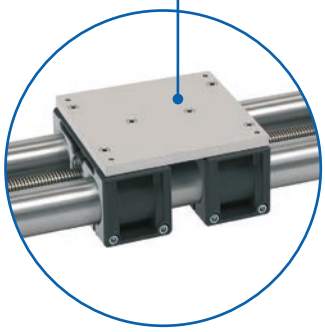

Large fixing plate

✓ The EPX version is equipped with two carriages that are connected via a large fixing plate

✓ Enables high moments

Features:

- Enables high moments
- Version available with large fixing plate

Options:

- Corrosion-protected units
- Bellows
- Second not driven carriage

Varianten:

- EP-II 30/40 Protect and EPX-II 30/40 Protect with bellows (Protection class IP 40)

EP(X) tubular linear unit – Table of contents

Properties/Technical data

- General information/operating conditions ... 104
- Load data ... 105
- Geometric moments of inertia ... 105

Versions
(Dimensions, order numbers)

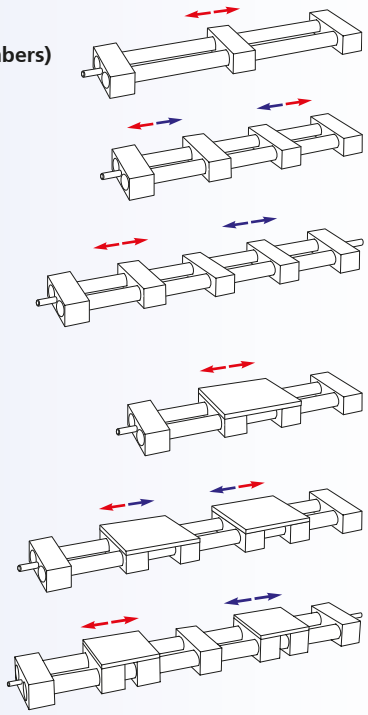

- EP right *or* lefthand thread ... 106 - 107
- EP right *and* lefthand thread ... 108 - 109
- EP *split* screw ... 110 - 111
- EPX right *or* lefthand thread ... 112 - 113
- EPX right *or* lefthand thread ... 114 - 115
- EPX *split* screw ... 116 - 117

Accessories

Drive

- Handwheel ... 118
- Chain wheel ... 119
- HTD Timing-belt pulley ... 119
- Angular drive ... 120
- Flange bearing unit ... 123
- Transmission unit ... 123
- Motor adaptor/coupling ... 129 - 130

Position determination

- Scale ... 132
- Positioning indicator ... 133
- Limit switch ... 134 - 135

General information/operating conditions

Design	Twin tube actuator with ACME screw/For EP 18 and EPX 18 solid shaft instead of tube
Guide	Slide guide, optional carriage with slide guide available
Installation position	Any position
Lead accuracy	± 0.2 mm/300 mm stroke
Self-locking	Yes*
Ambient temperature	0°C to +60°C

*see Glossary under item Self-locking

Screw lead

Type	Screw lead [mm]	Speed with slide bearing [mm/s]	Speed with ball bearing [mm/s]
EP / EPX 18	2	2.7	8.3
EP / EPX 30	3	4	12.5
EP / EPX 40	4	5.3	16.7
EP / EPX 50	4	5.3	16.7
EP / EPX 60	5	6.7	20.8
EP / EPX 80	6	8	25

$$\text{Required screw speed* n [rpm]} = \frac{\text{speed [m/min] x 1000}}{\text{screw lead [mm]}}$$

Max. screw speed with slide bearing 80 rpm
with ball bearing 250 rpm

No-load torque

[Nm]

Type	with ball bearing	with slide bearing
EP 18	0.30	*
EP 30	0.60	0.75
EP 40	0.70	0.85
EP 50	1.10	1.25
EP 60	1.40	*
EP 80	1.00	*

[Nm]

Type	with ball bearing	with slide bearing
EPX 18	0.40	*
EPX 30	0.70	0.75
EPX 40	0.80	0.85
EPX 50	1.20	1.25
EPX 60	1.50	*
EPX 80	1.40	*

* Type 18, 60 and 80 spindle only available with ball bearing

RK ROSE+KRIEGER

Load data*

F Force [N]

M Moment [Nm]

I Geometric moment of inertia [cm^4]

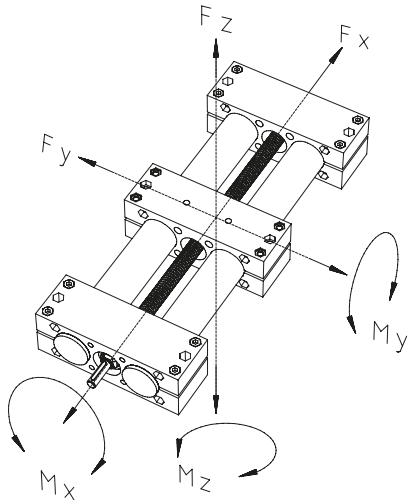

* with reference to carriage (deflection of guide element f = 0.5 mm, static, end elements supported)

Type	Fx	Fy*			Fz*			Mx	My	Mz
Total length [mm]		500	1000	1500	500	1000	1500			
EP 18	400	200	100	–	100	70	–	20	30	35
EP 30	800	1000	800	500	550	300	100	60	60	75
EP 40	1000	3500	2600	1300	2000	580	120	120	130	150
EP 50	1700	3800	2300	2050	3000	670	170	160	200	260
EP 60	2500	6600	5400	4900	6000	2600	330	300	340	480
EP 80	4500	11000	9000	7500	8000	3700	700	400	530	620
EPX 18	400	270	170	–	130	100	–	40	45	70
EPX 30	800	1400	1200	700	650	450	200	80	110	140
EPX 40	1000	6000	3100	1800	2200	680	220	160	190	240
EPX 50	1700	7700	5000	2500	3300	830	310	240	345	510
EPX 60	2500	11000	9000	7800	7000	2900	580	520	610	910
EPX 80	4500	14000	11700	10100	9100	4800	750	650	780	1100

Geometric moment of inertia

[cm^4]

Type	Iy	Iz
EP(X) 18	1.03	21.39
EP(X) 30	3.47	46.57
EP(X) 40	14.84	198.06
EP(X) 50	30.81	319.84
EP(X) 60	65.88	795.90
EP(X) 80	237.41	3168.98

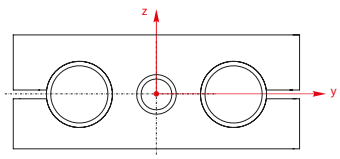

Order instructions:

- Corrosion-protected units available on request
- Second free-running carriage available on request
- Bellows version available as optional extra
- Other screw leads available on request

Version ■ **Right *or* lefthand thread**

Type 18-60 (image similar)

Type 80

Code No.	Type	Spindle	Basic length	B	C	D1	D2	D3	F	G1**	G2	H	J	L1	L2	M1	M2	M3	M4
72_181_	18	10x2	87	82	29	6	–	16 H7	1	–	M5/5 deep	14.5	28	17	–	–	68	40	18
72_183_							6								17				
72_301_	30	14x3	150	130	54	8	–	30 H8	2	M6 / 12 deep	M6/9 deep	27	50	26	–	40x 30	114.5	70	42
72_303_							8								26				
72_401_	40	20x4	180	180	63	12	–	40 H8	3	M8 / 20 deep	M8/8 deep	31.5	60	38	–	46	160	90	62
72_403_							12								38				
72_501_	50	20x4	216	206	73	12	–	40 H8	1	M8 / 30 deep	M8/8 deep	36.5	72	38	–	46	184	100	62
72_503_							12								38				
72_601_	60	24x5	240	240	88	14	–	50 H8	2	M8 / 20 deep	M10/10 deep	44	80	38	–	55	216	130	74
72_603_							14								38				
72_801_	80	32x6	360	302	143	20	–	70 H7	4.5	M8 / 20 deep	M10/20 deep	71.5	120	31.5	–	64	–	180	–
72_803_							20								31.5				

_ _ _ _ Total length = basic length + travel [mm]

Bearing:
0 = spindle with slide bearing*
1 = spindle with ball bearing
2 = spindle with slide bearing* and carriage with slide bushing
3 = spindle with ball bearing and carriage with slide bushing

Version:
1 = righthand thread
2 = lefthand thread

* Type 18, 60 and 80 spindle only available with ball bearing
** G1 thread only available on spindle with ball bearing

EP – Versions

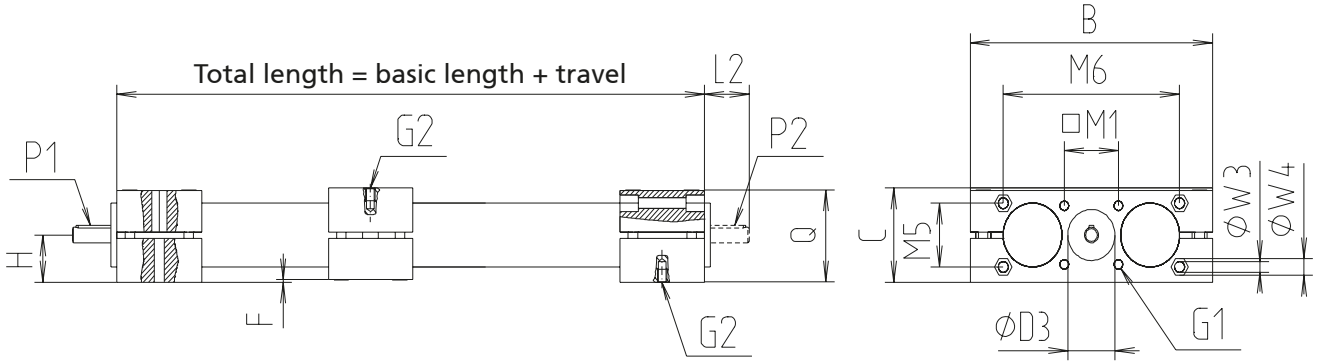

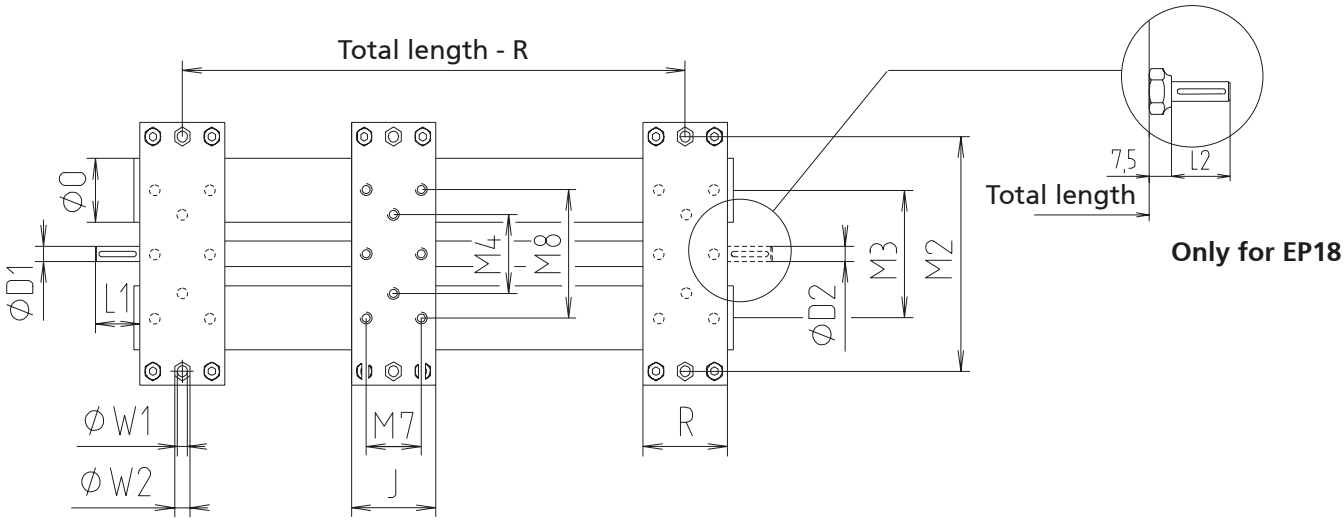

[mm]

M 5	M 6	M 7	M 8	O	P 1	P 2	Q	R	W 1	W 2	W 3	W 4	Max. travel	Mass [kg] Basic length	Mass [kg] per 100 mm travel
–	–	–	–	18	2x2x12	–	28	28	5.5	A/F 8/6.5 deep	–	–	1080	0.775	0.45
						2x2x12							1063	0.779	0.45
35	92	–	–	30	2x2x20	–	52	50	6.5	A/F 10 / 26.5 deep	–	–	1424	2.065	0.33
						2x2x20							1398	2.075	0.33
38	132	–	–	40	4x4x32	–	60	60	8.5	A/F 13 / 32 deep	6.5	A/F 11/7 deep	2820	4.925	0.90
						4x4x32							2820	4.960	0.90
50	150	–	–	50	4x4x32	–	72	72	8.5	A/F 13 / 37.5 deep	8.5	A/F 13/8.5 deep	2784	7.438	1.10
						4x4x32							2784	7.473	1.10
60	185	–	–	60	5x5x32	–	86	80	10.5	A/F 17 / 44.5 deep	8.5	A/F 13/8.5 deep	2760	13.420	1.63
						5x5x32							2760	13.466	1.63
–	–	80	180	80	6x6x22	–	138.5	–	–	–	–	–	2640	35.920	3.47
						6x6x22							2640	36.010	3.47

EP – Versions

Order instructions:

- Please specify total travel when placing an order
- Corrosion protected units available on request
- Second free running carriage available on request
- Bellows version available as optional extra
- Other screw leads available on request

Version ■ **Right *and* lefthand thread**

Type 18-60 (image similar)

Type 80

Righthand thread

Lefthand thread (shaft end L1)

Code No.	Type	Spindle	Basic length	B	C	D 1	D 2	D 3	F	G 1**	G 2	H	J	L 1	L 2	M 1	M 2	M 3	M 4
72318_ _	18	10x2	118	82	29	6	6	16^{H7}	1	–	M5/5 deep	14.5	28	17	17	–	68	40	18
72330_ _	30	14x3	200	130	54	8	8	30^{H8}	2	M6/12 deep	M6/9 deep	27	50	26	26	40x 30	114.5	70	42
72340_ _	40	20x4	240	180	63	12	12	40^{H8}	3	M8 / 20 deep	M8/8 deep	31.5	60	38	38	46	160	90	62
72350_ _	50	20x4	288	206	73	12	12	40^{H8}	2	M8 / 30 deep	M8/8 deep	36.5	72	38	38	46	184	100	62
72360_ _	60	24x5	320	240	88	14	14	50^{H8}	2	M8 / 20 deep	M10/20 deep	44	80	38	38	55	216	130	74
72380_ _	80	32x6	480	302	143	20	20	70^{H7}	4.5	M8 / 20 deep	M10/20 deep	71.5	120	31.5	31.5	64	–	180	180

_ _ _ _ Total length = basic length + total travel [mm]

Bearing:
0 = spindle with slide bearing*
1 = spindle with ball bearing
2 = spindle with slide bearing* and carriage with slide bushing
3 = spindle with ball bearing and carriage with slide bushing

Version:
1 = 1 drive shaft at lefthand thread end
2 = 1 drive shaft at righthand thread end
3 = 2 drive shafts

* Type 18, 60 and 80 spindle only available with ball bearing
** G1 thread only available on spindle with ball bearing

EP – Versions

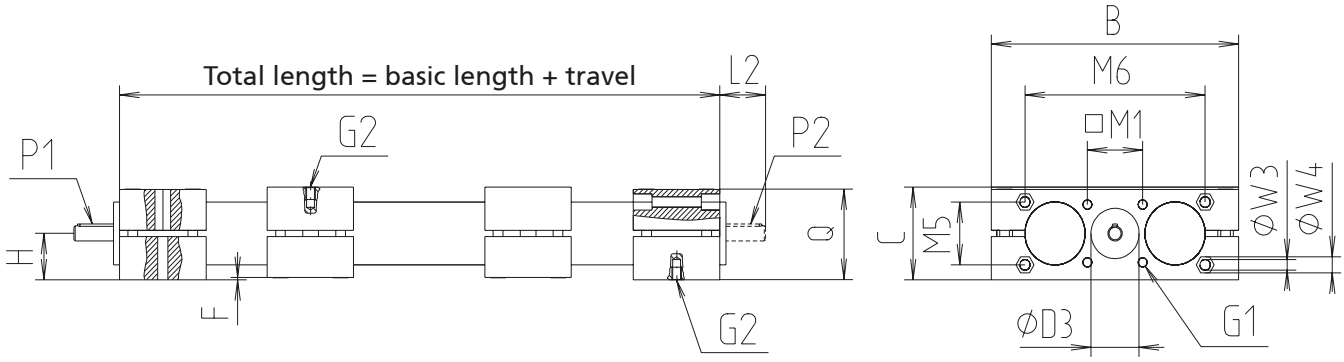

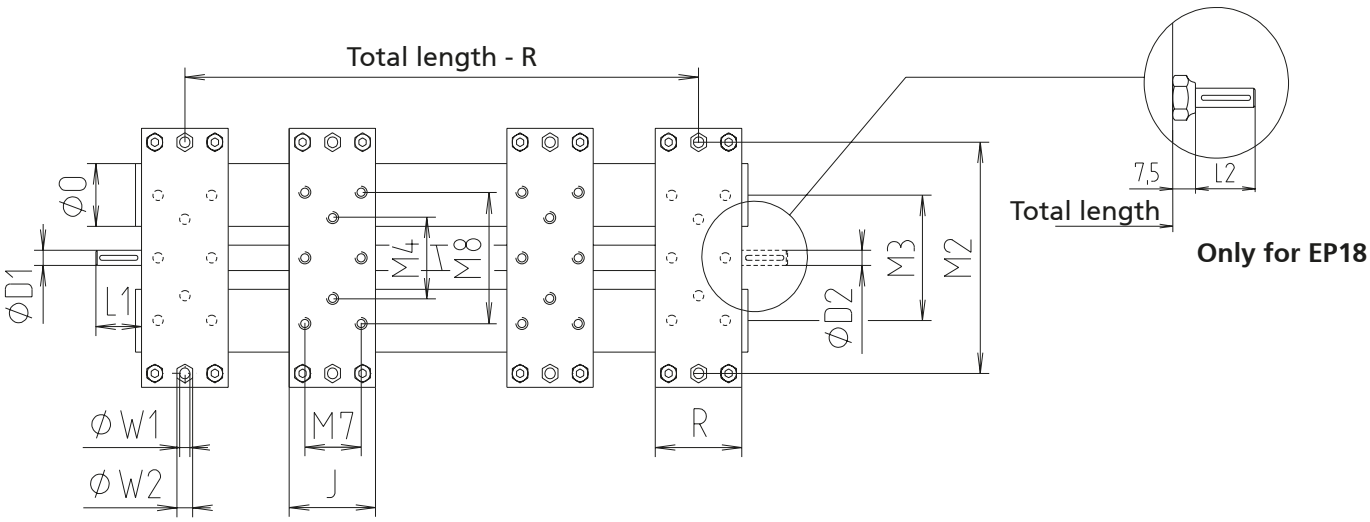

[mm]

M 5	M 6	M 7	M 8	O	P 1	P 2	Q	R	W 1	W 2	W 3	W 4	Max. travel	Mass [kg]	
														Basic length	per 100 mm travel
–	–	–	–	18	2x2x12	2x2x12	28	28	5.5	A/F 8/6.5 deep	–	–	1386	1.014	0.45
35	92	–	–	30	2x2x20	2x2x20	52	50	6.5	A/F 10 / 26.5 deep	–	–	1800	2.440	0.33
38	132	–	–	40	4x4x32	4x4x32	60	60	8.5	A/F 13 / 32 deep	6.5	A/F 11 / 7 deep	2760	5.585	0.90
50	150	–	–	50	4x4x32	4x4x32	72	72	8.5	A/F 13 / 37.5 deep	8.5	A/F 13 / 8.5 deep	2712	8.633	1.10
60	185	–	–	60	5x5x32	5x5x32	86	80	10.5	A/F 17 / 44.5 deep	8.5	A/F 13 / 8.5 deep	2680	18.182	1.63
–	–	80	180	80	6x6x22	6x6x22	138.5	120	–	–	–	–	2520	48.480	3.47

Order instructions:

- Please specify total travel when placing an order
- Corrosion protected units available on request
- Second free running carriage available on request
- Bellows version available as optional extra
- Other screw leads available on request

Version ■ ***Split* screw**

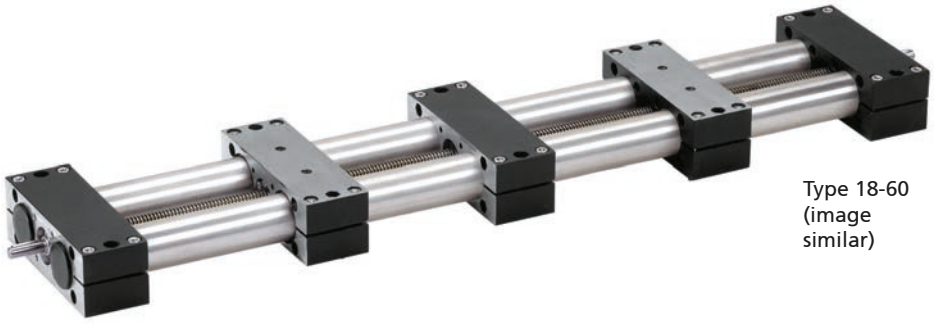

Type 18-60 (image similar)

Type 80

Righthand thread

Righthand thread

Code No.	Type	Spindle	Basic length	B	C	D 1	D 2	D 3	F	G 1**	G 2	H	J	L 1	L 2	M 1	M 2	M 3	M 4
724183 _	18	10x2	146	82	29	6	6	16^{H7}	1	–	M5 / 5 tief	14.5	28	17	17	–	68	40	18
724303 _	30	14x3	250	130	54	8	8	30^{H8}	2	M6 / 12 deep	M6 / 9 deep	27	50	26	26	40x30	114.5	70	42
724403 _	40	20x4	300	180	63	12	12	40^{H8}	3	M8 / 20 deep	M8 / 8 deep	31.5	60	38	38	46	160	90	62
724503 _	50	20x4	360	206	73	12	12	40^{H8}	2	M8 / 30 deep	M8 / 8 deep	36.5	72	38	38	46	184	100	62
724603 _	60	24x5	400	240	88	14	14	50^{H8}	2	M8 / 20 deep	M10/10 deep	44	80	38	38	55	216	130	74
724803 _	80	32x6	600	302	143	20	20	70^{H7}	4.5	M8 / 20 deep	M10/20 deep	71.5	120	31.5	31.5	64	–	180	180

_ _ _ _ Total length = basic length + total travel [mm]

Bearing:
1 = spindle with ball bearing and carriage without slide bushing
3 = spindle with ball bearing and carriage with slide bushing

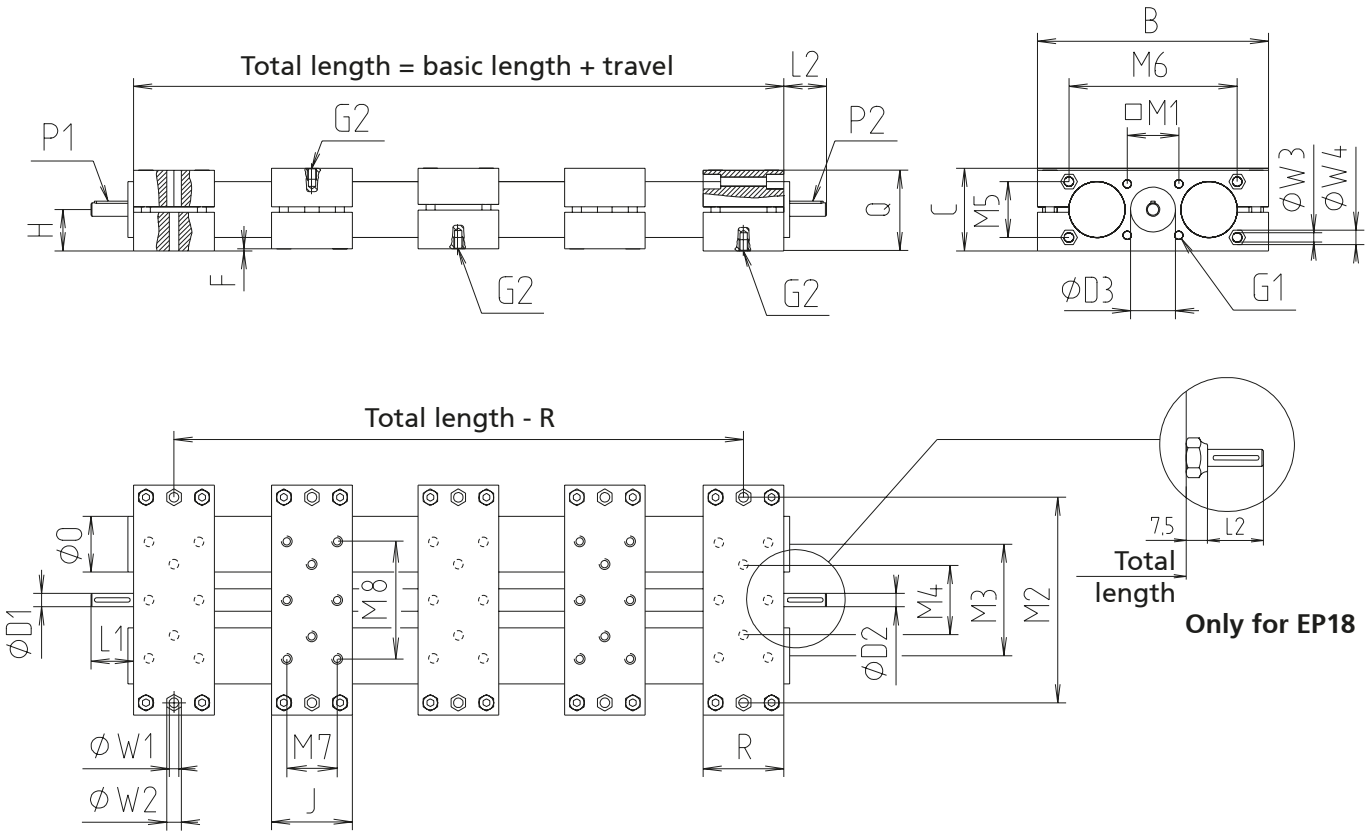

[mm]

M 5	M 6	M 7	M 8	O	P 1	P 2	Q	R	W 1	W 2	W 3	W 4	Max. travel/end	Mass [kg]	
														Basic length	per 100 mm travel
–	–	–	–	18	2 x 2 x 12	2 x 2 x 12	28	28	5.5	A/F 8/6.5 deep	–	–	927	1.245	0.45
35	92	–	–	30	2 x 2 x 20	2 x 2 x 20	52	50	6.5	A/F 10/26.5 deep	–	–	1375	2.645	0.33
38	132	–	–	40	4x4x32	4x4x32	60	60	8.5	A/F 13/32 deep	6.5	A/F 11/7 deep	1350	8.020	0.90
50	150	–	–	50	4 x 4 x 32	4 x 4 x 32	72	72	8.5	A/F 13/37.5 deep	8.5	A/F 13/8.5 deep	1320	12.760	1.10
60	185	–	–	60	5 x 5 x 32	5 x 5 x 32	86	80	10.5	A/F 17/44.5 deep	8.5	A/F 13/8.5 deep	1300	22.532	1.63
–	–	80	180	80	6 x 6 x 20	6 x 6 x 20	138.5	120	–	–	–	–	1200	60.110	3.47

Order instructions:

- Corrosion-protected units available on request
- Second free-running carriage available on request
- Bellows version available as optional
- Other screw leads available on request

Version ■ **Right *or* lefthand thread**

Type 18-60 (image similar)

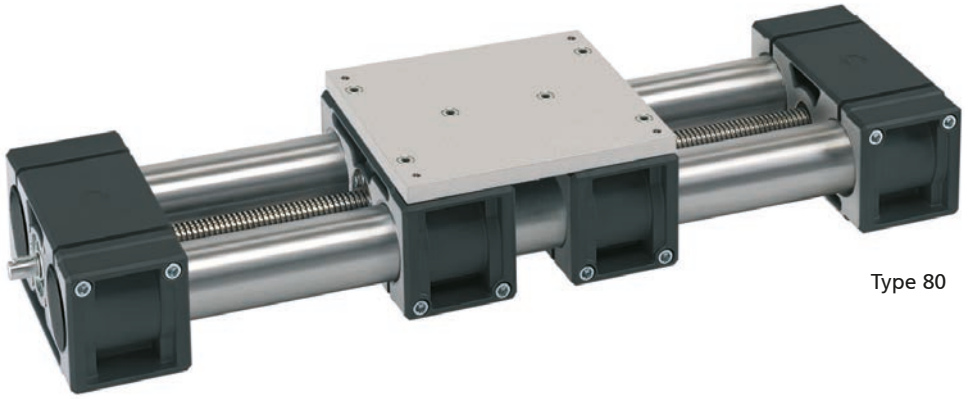

Type 80

Code No.	Type	Spindle	Basic length	B	C	D 1	D 2	D 3	F	G 1**	G 2	G 3	H 1	H 2	J	L 1	L 2	M 1	M 2	M 3	M 4
72 _ 181 _	18	10 x 2	139	82	37	6	–	16^{H7}	1	–	M6	M5/5 deep	14.5	8	80	17	–	–	68	40	18
72 _ 183 _	18						6										17				
72 _ 301 _	30	14 x 3	230	130	64	8	–	30^{H8}	2	M6/12 deep	M6	M6/9 deep	27	10	130	26	–	40 x 30	114.5	70	42
72 _ 303 _	30						8										26				
72 _ 401 _	40	20 x 4	300	180	75	12	–	40^{H8}	3	M8 / 20 deep	M8	M8 / 8 deep	31.5	12	180	38	–	46	160	90	62
72 _ 403 _	40						12										38				
72 _ 501 _	50	20 x 4	350	206	88	12	–	40^{H8}	2	M8/30 deep	M8	M8/8 deep	36.5	15	206	38	–	46	184	100	62
72 _ 503 _	50						12										38				
72 _ 601 _	60	24 x 5	400	240	103	14	–	50^{H8}	2	M8/20 deep	M10	M10/10 deep	44	15	240	38	–	55	216	130	74
72 _ 603 _	60						14										38				
72 _ 801 _	80	32 x 6	550	302	162	20	–	70^{H7}	4.5	M8/20 deep	M10	M10/20 deep	71.5	19	310	31.5	–	64	–	180	180
72 _ 803 _	80						20										31.5				

_ _ _ _ Total length = basic length + travel [mm]

Bearing:
0 = spindle with slide bearing*
1 = spindle with ball bearing
2 = spindle with slide bearing* and carriage with slide bushing
3 = spindle with ball bearing and carriage with slide bushing

Version:
5 = righthand thread
6 = lefthand thread

* Type 18, 60 and 80 spindle only available with ball bearing
** G1 thread only available on spindle with ball bearing

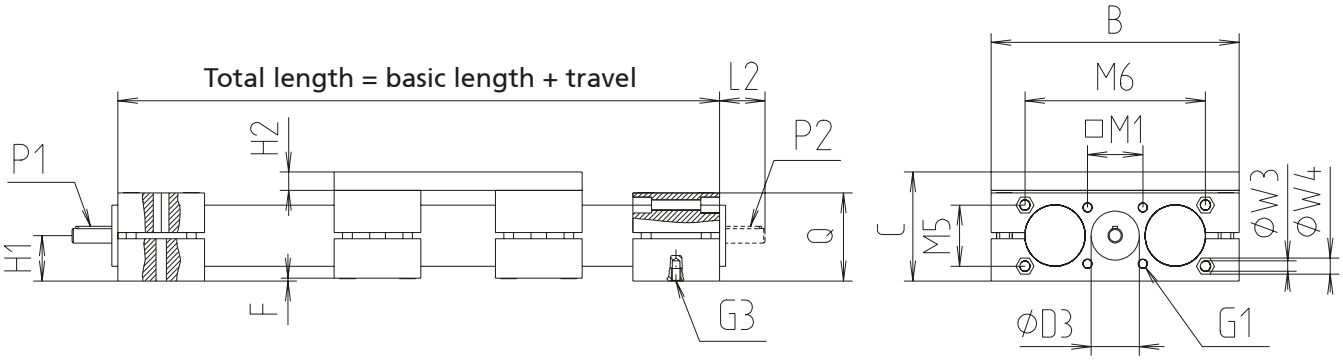

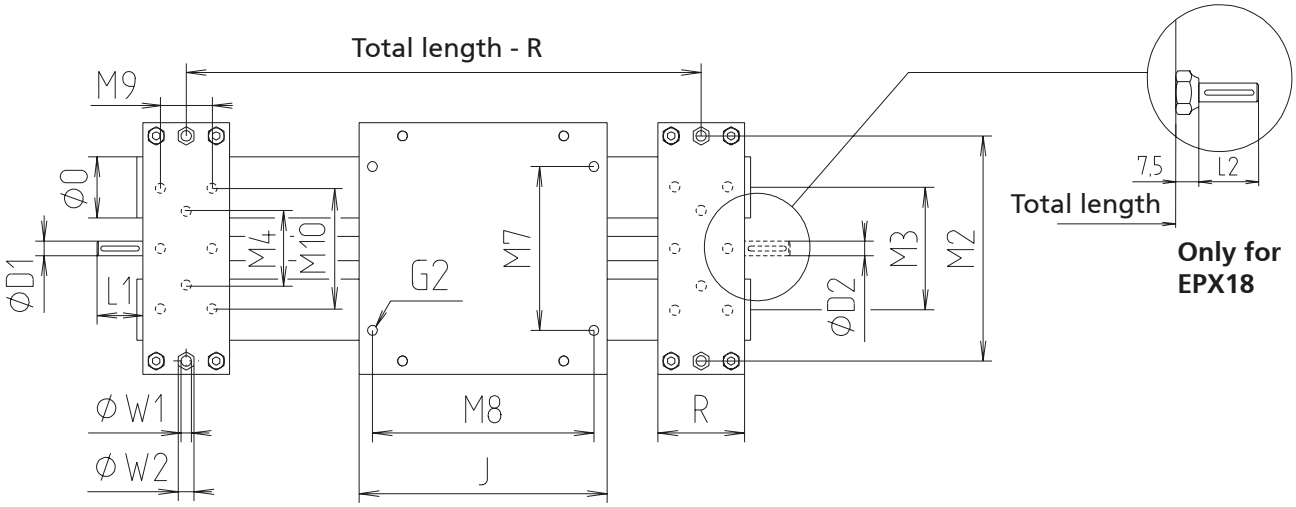

[mm]

M 5	M 6	M 7	M 8	M 9	M 10	O	P 1	P 2	Q	R	W 1	W 2	W 3	W 4	Max. travel	Mass [kg] Basic length	Mass [kg] per 100 mm travel
–	–	56	28	–	–	18	2 x 2 x 12	–	28	28	5.5	A/F 8/6.5 deep	–	–	1028	1.261	0.45
								2 x 2 x 12							1011	1.265	0.45
35	92	80	114	–	–	30	2 x 2 x 20	–	52	50	6.5	A/F 10/26.5 deep	–	–	1344	3.519	0.33
								2 x 2 x 20							1318	3.529	0.33
38	132	120	160	–	–	40	4 x 4 x 32	–	60	60	8.5	A/F 13/32 deep	6.5	A/F 11 / 7 deep	2700	8.105	0.90
								4 x 4 x 32							2700	8.140	0.90
50	150	134	184	–	–	50	4 x 4 x 32	–	72	72	8.5	A/F 13/37.5 deep	8.5	A/F 13/8.5 deep	2650	12.525	1.10
								4 x 4 x 32							2650	12.560	1.10
60	185	160	216	–	–	60	5 x 5 x 32	–	86	80	10.5	A/F 17/44.5 deep	8.5	A/F 13/8.5 deep	2600	21.426	1.63
								5 x 5 x 32							2600	21.472	1.63
–	–	250	270	80	180	80	6 x 6 x 20	–	138.5	120	–	–	–	–	2450	54.760	3.47
								6 x 6 x 20							2450	54.860	3.47

Order instructions:

- Please specify total travel when placing an order
- Corrosion protected units available on request
- Second free running carriage available on request
- Bellows version available as optional extra
- Other screw leads available on request

Version ■ **Right *and* lefthand thread**

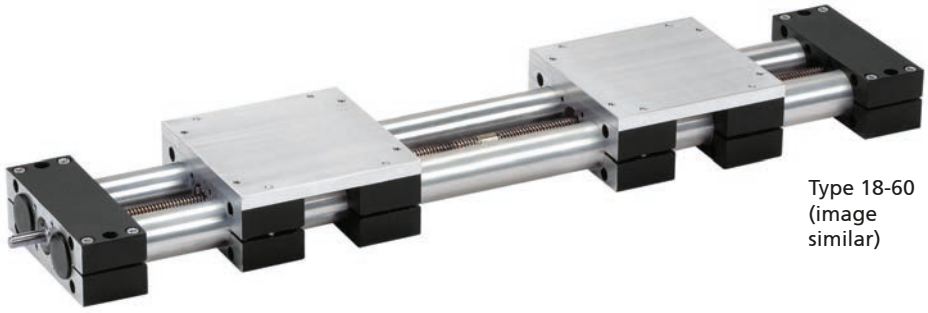

Type 18-60 (image similar)

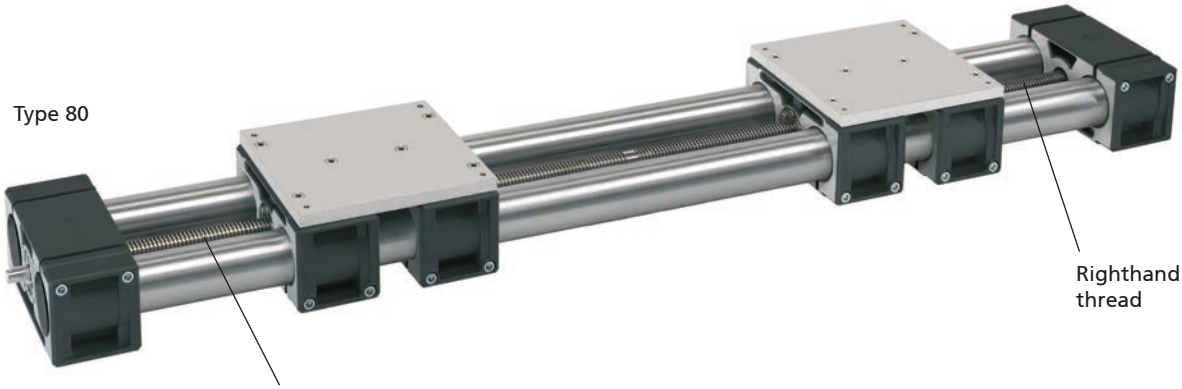

Code No.	Type	Spindle	Basic length	B	C	D 1	D 2	D 3	F	G 1**	G 2	G 3	H 1	H 2	J	L 1	L 2	M 1	M 2	M 3	M 4
72718_ _	18	10 x 2	222	82	37	6	6	16^{H7}	1	–	M6	M5/5 deep	14.5	8	80	17	17	–	68	40	18
72730_ _	30	14 x 3	360	130	64	8	8	30^{H8}	2	M6/12 deep	M6	M6/9 deep	27	10	130	26	26	40 x 30	114.5	70	42
72740_ _	40	20 x 4	480	180	75	12	12	40^{H8}	3	M8/20 deep	M8	M8 / 8 deep	31.5	12	180	38	38	46	160	90	62
72750_ _	50	20 x 4	556	206	88	12	12	40^{H8}	2	M8/30 deep	M8	M8/8 deep	36.5	15	206	38	38	46	184	100	62
72760_ _	60	24 x 5	640	240	103	14	14	50^{H8}	2	M8/20 deep	M10	M10/10 deep	44	15	240	38	38	55	216	130	74
72780_ _	80	32 x 6	860	302	162	20	20	70^{H7}	4.5	M8/20 deep	M10	M10/20 deep	71.5	19	310	31.5	31.5	64	–	180	180

_ _ _ _ Total length = basic length + total travel [mm]

Bearing:
0 = spindle with slide bearing*
1 = spindle with ball bearing
2 = spindle with slide bearing* and carriage with slide bushing
3 = spindle with ball bearing and carriage with slide bushing

Version:
1 = 1 drive shaft at lefthand thread end
2 = 1 drive shaft at righthand thread end
3 = 2 drive shafts

* Type 18, 60 and 80 spindle only available with ball bearing
** G1 thread only available on spindle with ball bearing

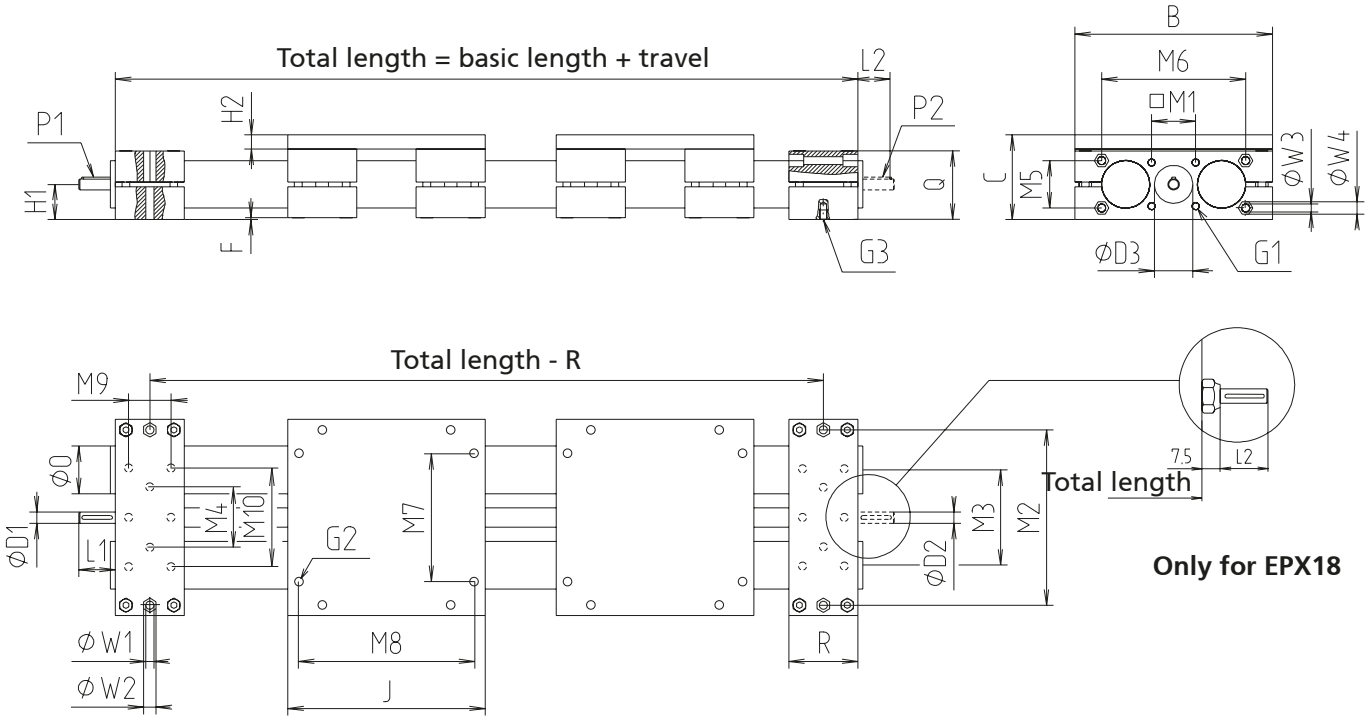

[mm]

M 5	M 6	M 7	M 8	M 9	M 10	O	P 1	P 2	Q	R	W 1	W 2	W 3	W 4	Max. travel	Mass [kg] Basic length	Mass [kg] per 100 mm travel
–	–	56	28	–	–	18	2 x 2 x 12	2 x 2 x 12	28	28	5.5	A/F 8/6.5 deep	–	–	1282	1.983	0.45
35	92	80	114	–	–	30	2 x 2 x 20	2 x 2 x 20	52	50	6.5	A/F 10/26.5 deep	–	–	1640	5.588	0.33
38	132	120	160	–	–	40	4 x 4x32	4x4x32	60	60	6.5	SW 13 / 32 deep	6.5	A/F 11 / 7 deep	2520	13.030	0.90
50	150	134	184	–	–	50	4 x 4 x 32	4 x 4 x 32	72	72	8.5	A/F 13/37.5 deep	8.5	A/F 13/8.5 deep	2444	20.166	1.10
60	185	160	216	–	–	60	5 x 5 x 32	5 x 5 x 32	86	80	10.5	A/F 17/44.5 deep	8.5	A/F 13/8.5 deep	2360	34.244	1.63
–	–	250	270	80	180	80	6 x 6 x 20	6 x 6 x 20	138.5	120	–	–	–	–	2140	86.070	3.47

EPX – Versions

Order instructions:

- Please specify total travel when placing an order
- Corrosion protected units available on request
- Second free running carriage available on request
- Bellows version available as optional extra
- Other screw leads available on request

Version ■ ***Split* screw**

Type 18-60 (image similar)

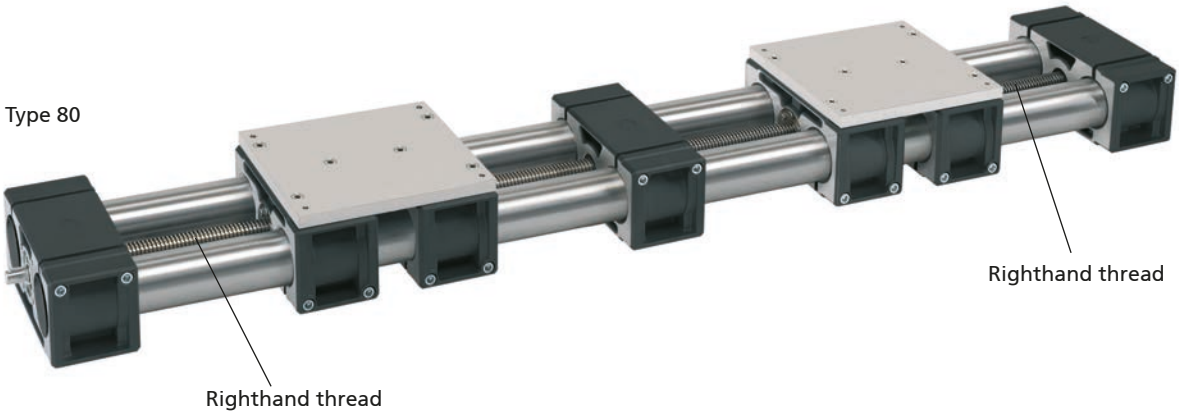

Code No.	Type	Spindle	Basic length	B	C	D 1	D 2	D 3	F	G 1**	G 2	G 3	H 1	H 2	J	L 1	L 2	M 1	M 2	M 3	M 4
728183_	18	10 x 2	250	82	37	6	6	16^{H7}	1	–	M6	M5/5 deep	14.5	8	80	17	17	–	68	40	18
728303_	30	14 x 3	410	130	64	8	8	30^{H8}	2	M6/12 deep	M6	M6/9 deep	27	10	130	26	26	40 x 30	114.5	70	42
728403_	40	20 x 4	540	180	75	12	12	40^{H8}	3	M8/20 deep	M8	M8 / 8 deep	31.5	12	180	38	38	46	160	90	62
728503_	50	20 x 4	628	206	88	12	12	40^{H8}	2	M8/30 deep	M8	M8/8 deep	36.5	15	206	38	38	46	184	100	62
728603_	60	24 x 5	720	240	103	14	14	50^{H8}	2	M8/20 deep	M10	M10/10 deep	44	15	240	38	38	55	216	130	74
728803_	80	32 x 6	980	302	162	20	20	70^{H7}	4.5	M8/20 deep	M10	M10/20 deep	71.5	19	310	31.5	31.5	64	–	180	180

_ _ _ _ Total length = basic length + total travel [mm]

Bearing:
1 = spindle with ball bearing and carriage without slide bushing
3 = spindle with ball bearing and carriage with slide bushing

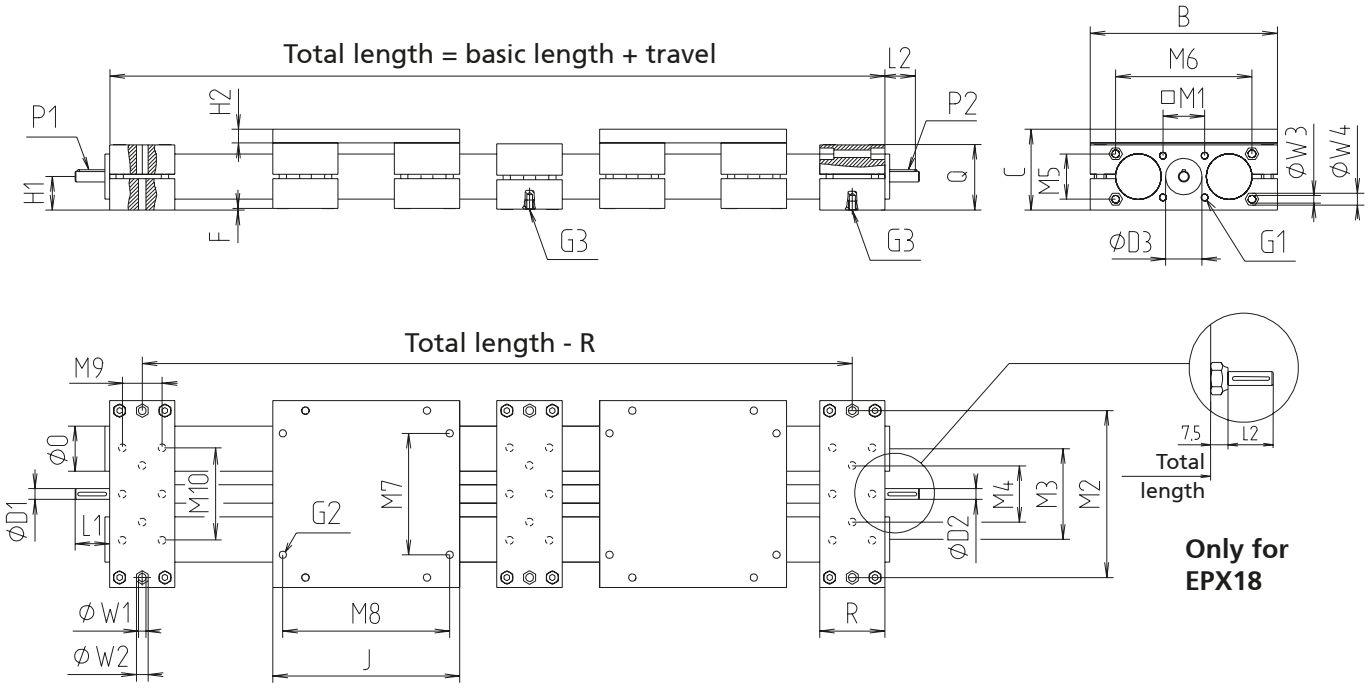

[mm]

M 5	M 6	M 7	M 8	M 9	M 10	O	P 1	P 2	Q	R	W 1	W 2	W 3	W 4	Max. travel/ end	Mass [kg]	
																Basic length	per 100 mm travel
–	–	56	28	–	–	18	2 x 2 x 12	2 x 2 x 12	28	28	5.5	A/F 8/6.5 deep	–	–	875	2.215	0.45
35	92	80	114	–	–	30	2 x 2 x 20	2 x 2 x 20	52	50	6.5	A/F 10/26.5 deep	–	–	1295	6.247	0.33
38	132	120	160	–	–	40	4 x4 x32	4 x 4 x 32	60	60	8.5	AF 13/ 32 deep	6.5	SW 11 / 7 deep	1230	14.620	0.90
50	150	134	184	–	–	50	4 x 4 x 32	4 x 4 x 32	72	72	8.5	A/F 13/37.5 deep	8.5	A/F 13/8.5 deep	1186	22.608	1.10
60	185	160	216	–	–	60	5 x 5 x 32	5 x 5 x 32	86	80	10.5	A/F 17/44.5 deep	8.5	A/F 13/8.5 deep	1140	38.548	1.63
–	–	250	270	80	180	80	6 x 6 x 20	6 x 6 x 20	138.5	120	–	–	–	–	1010	97.700	3.47

Handwheel

Material: Die-cast aluminium
black powder-coating

Diam. 140-200

Diam. 60-100

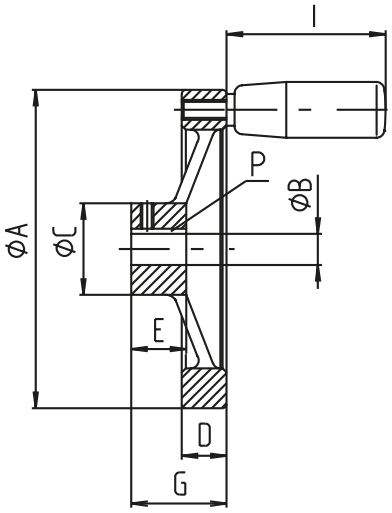

[mm]

Code No.	Type	Diam. A	B	C	D	E	G	P	I
90901	18	60	6	18	13	16	22	2 x 2	28
90913	30	100	8	28	14	17	30	2 x 2	52
90915	40-50	100	12	28	14	17	30	4 x 4	52
90905	40-50	140	12	36	16.5	19.5	36	4 x 4	66
90906	60	140	14	36	16.5	19.5	36	5 x 5	66
90918	60	160	14	36	18	20	39	5 x 5	80
90929	80	200	20	42	20.5	24	45	6 x 6	80

Chain wheel

- Other sizes on request

Material: Steel 500 N/mm^2, min.

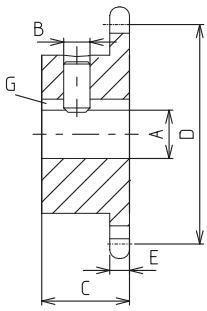

[mm]

Code No.	Type	A	B	C	D	E	G	No. of teeth	Size
91703	30	8	M6	18	41.1	4.5	2 x 2	10	1/2 x 3/16"
91704	40	12	M6	20	53	4.5	4 x 4	13	1/2 x 3/16"
91705	50	12	M6	20	61	4.5	4 x 4	15	1/2 x 3/16"
91706	60	14	M6	20	85	4.5	5 x 5	21	1/2 x 3/16"
91708	80	20	M6	25	85	4.5	6 x 6	21	1/2 x 3/16"

HTD timing-belt pulley

- Suitable for maintenance-free continuous operation
- Excellent accuracy and zero backlash during change of direction
- Can be clamped on feather key

Material: Steel

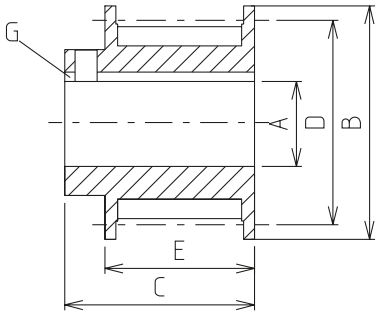

[mm]

Code No.	Type	A	B	C	D	E	G	Pull force	Pitch
92103	30	8	23	20	19.09	14.5	2 x 2	220 N	5
92105	40/50	12	32	26	28.65	20.5	4 x 4	330 N	5
92106	60	14	32	26	28.65	20.5	5 x 5	330 N	5

Order instruction:

- When using angle drives, only use linear units with ball bearings

Angular drive

- Fits all EP(X) linear units 30-60
- No shaft extension or adapter necessary
- Can be retrofitted
- Low noise level
- Suitable for manual adjustment and motorized via EHL or unit drive LZ

Technical data

Angular Drive												
Type	Duty cycle		Ambient temperature		Drive speed		Nominal torque [Nm]		Max. torque* [Mm]		Efficiency [%]	
	L	T	L	T	L	T	L	T	L	T	L	T
30	S3 30% basic 1h		0°C to +60°C		0 to 350 min^{-1}		1,90	0,95	8		95	90
40							2,90	1,45	12		95	90
50							4,70	2,35	17		95	90
60							6,70	3,35	17		95	90

*Briefly. Not a permanent moment. Block travel not permitted.

Configuration examples

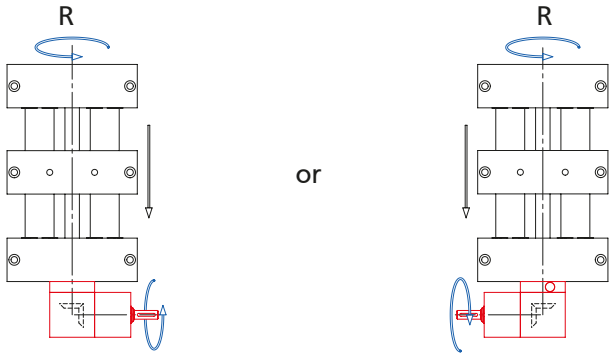

Components needed:

1x EP(X) with righthand thread
1x Angular drive – L
1x Flange bearing unit

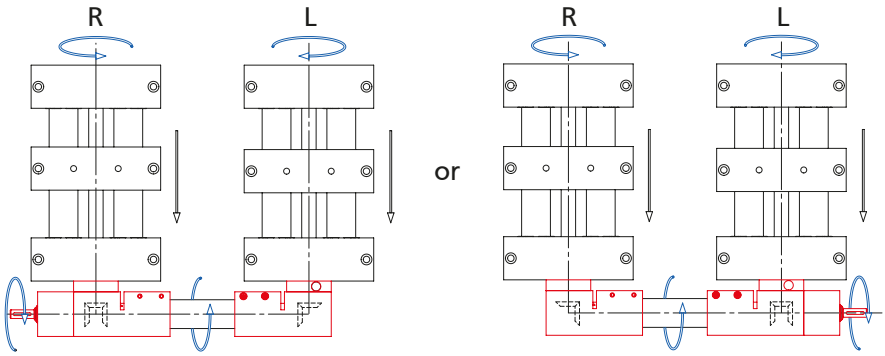

Components needed:

1x EP(X) with righthand thread
1x EP(X) with lefthand thread
2x Angular drive – T
1x Flange bearing unit
1x Transmission unit

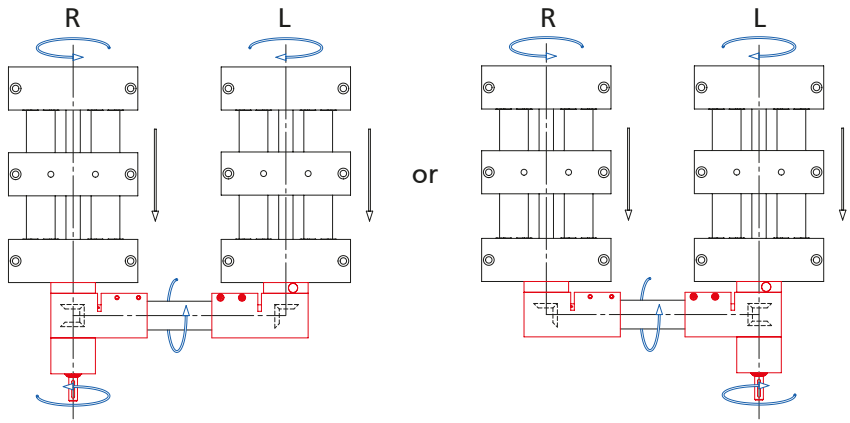

Components needed:

1x EP(X) with righthand thread
1x EP(X) with lefthand thread
2x Angular drive – T
1x Flange bearing unit
1x Transmission unit

Order instruction:

- When adapting an hand-wheel or positioning-indicator a flange bearing unit is still required

Angular drive – L

- For 90° arrangement of the hand-wheel, EHL or unit drive LZ on an EP(X) linear unit

Scope of delivery:
Housing, 1 Plastic-bevel gear with adjusting ring, screws and closing caps

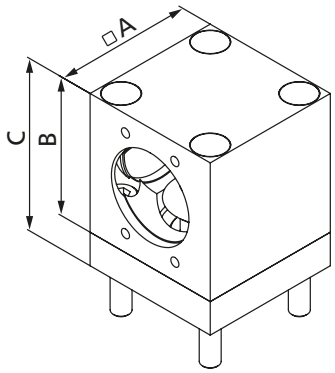

[mm]

Code No.	Type	i	A	B	C
91530F1F1A	30	1:1	52	52	61
91531F1F1A	40	1:1	62	62	77
91532F1F1A	50	1:1	72	72	87
91533F1F1A	60	1:1	82	82	94

Order instruction:

- When adapting an hand-wheel or positioning-indicator a flange bearing unit is still required

Angular drive – T

- For synchronization of two EP(X) linear units
- Suitable for manual adjustment, via EHL or unit drive LZ

Scope of delivery:
Housing, 2 Plastic-bevel gears with adjusting rings, screws and closing caps

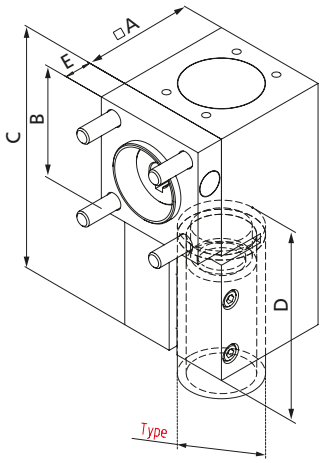

[mm]

Code No.	Type	i	A	B	C	D	E
91530G1F1A	30	1:1	52	52	102	39	9
91531G1F1A	40	1:1	62	62	134	55	15
91532G1F1A	50	1:1	72	72	153	66	15
91533G1F1A	60	1:1	82	82	172	80	12

Order instruction:

- When adapting an EHL or the unit drive LZ S, a motor adapter is still required

- For adaptation of the hand-wheel or position indicator on the angular drive
- When adapting an EHL or the unit drive LZ S, a motor adapter is still required

Scope of delivery:
Housing, 1 Plastic-bevel gear with shim rings and screws

Flange bearing unit

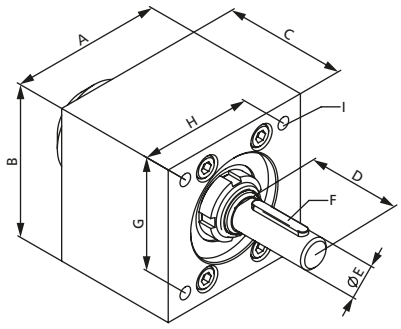

[mm]

Code No.	Type	A	B	C	D	E	F	G	H	I
91540H1F1A	30	52	52	40	24	8	2x2x20	30	40	4xM6-12 deep
91541H1F1A	40	62	62	50	38	12	4x4x25	46	46	4xM6-12 deep
91542H1F1A	50	72	72	74	38	12	4x4x32	46	46	4xM8-16 deep
91543H1F1A	60	82	82	68	33	14	5x5x32	55	55	4xM8-16 deep

Transmission unit

- For torque transmission with parallel linear units

Material:
Tube and bearing elements zinc plated steel, shaft bright

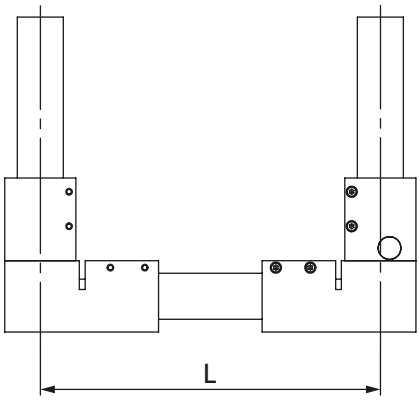

[mm]

Code No.	Type	Basic length (minimum length)	Max. length	Required length
92523_ _ _ _	30	160	3074	L – 74
92544_ _ _ _	40	210	3096	L – 96
92555_ _ _ _	50	240	3102	L – 102
92506_ _ _ _	60	270	3102	L – 102

Length [mm]

EP(X) – Drive

Order instruction:

- When using angle drives, only use linear units with ball bearings

Angular drive

- Fits all EP(X) linear units 30-60
- No shaft extension or adapter necessary
- Can be retrofitted
- Low noise level
- **Suitable for adjustment with servo, stepper or three-phase motor**

Technical data angular drive

	For EP(X) 30–60	
Reduction		1:1
Drive speed	min^{-1}	0–350
Duty cycle		S3 30% Basis 1h
Efficiency at full load	%	System 1: 90 System 2–3: 81
Ambient temperature	°C	0 to +60

RK ROSE+KRIEGER

Angular drive for EP(X)

System 1

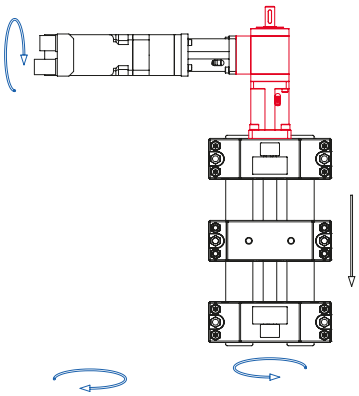

System 2

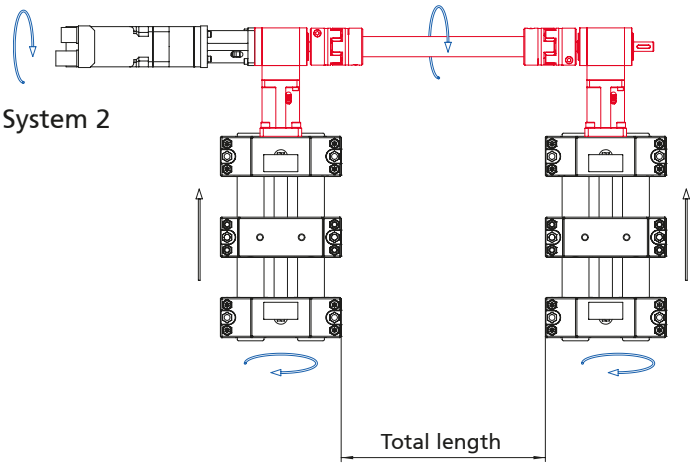

System 3

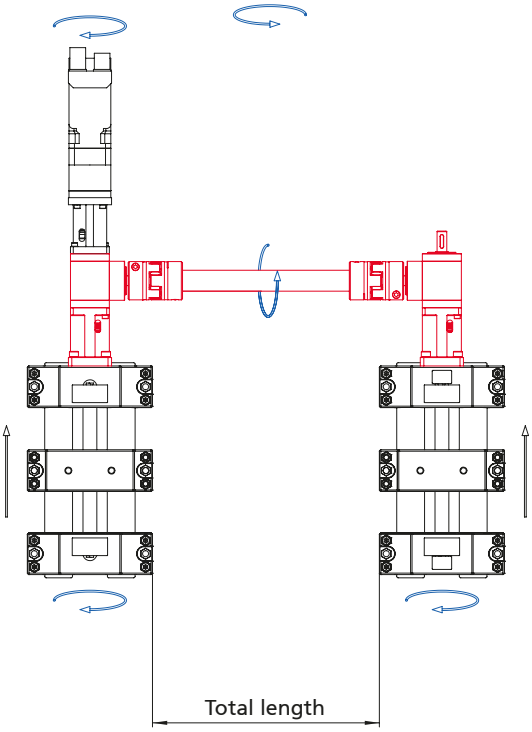

Code No.	Type	Size	Basic length (minimum length)	Max. length (clearance)	Weight [kg]	
					Basic length	per 100 mm travel
982_ _ C1A0000	Angular gear system 1	30	–	–	0,62	–
		40			1,59	
		50			1,59	
		60			1,65	
982_ _ C1B_ _ _ _	Angular gear system 2	30	53	2000	1,28	0,06
		40	69	2800	3,57	0,18
		50	43	2800	3,57	0,18
		60	9	2800	3,68	0,18
982_ _ C1C_ _ _ _	Angular gear system 3	30	53	2000	1,28	0,06
		40	91	2800	3,57	0,18
		50	65	2800	3,57	0,18
		60	31	2800	3,68	0,18

Total length (mm)

60 = EP(X) 30
61 = EP(X) 40
62 = EP(X) 50
63 = EP(X) 60

Selection table - motor adaptor/coupling EP(X) for servo motors without gear

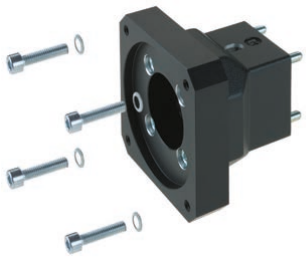

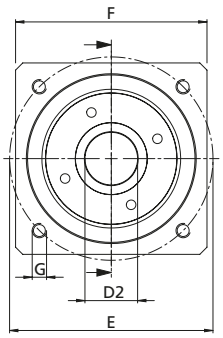

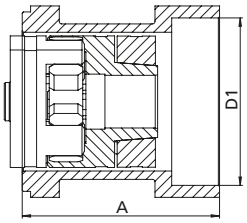

Manufacturers	Motor	EP(X) 30	EP(X) 40	EP(X) 50	EP(X) 60
RK Rose + Krieger	RK-AC 118	949200 911430 0811	949201 911430 1112	949201 911430 1112	–
	RK-AC 240	–	949221 911430 1214	949221 911430 1214	949223 911940 1414
	RK-AC 470	–	–	–	949239 911940 1419
Baumüller	DSD2-036	949200 911430 0811	949201 911430 1112	949201 911430 1112	–
	DSD2-045	–	949221 911430 1214	949221 911430 1214	949223 911940 1414
Beckhoff	AM8031, AM8032, AM8033	On request	On request	On request	–
	AM8041, AM8042, AM8043	–			
Bosch	MSK040B, MSK040C, MSK043C	–	On request	On request	–
	MSK050B, MSK050C		–	–	949239 911940 1419
Kollmorgen	AKM2G-31, AKM2G-32, AKM2G-33, AKM2G-34	On request	On request	On request	–
	AKM2G-41, AKM2G-42, AKM2G-43, AKM2G-44	–			
Lenze	MCS06I, MCS06F	949200 911430 0811	949201 911430 1112	949201 911430 1112	–
	MCS09D, MCS09F, MCS09H, MCS09L	–	949221 911430 1214	949221 911430 1214	949223 911940 1414
Lti/Keba	LSP10	–	–	–	949239 911940 1419
Mitsubishi	HG-JR53,(4), HG-JR 73(4), HG-JR103(4), HG-JR153(4), HG-JR203(4)	On request	On request	On request	–
Parker	SMH 60, SMHA 60	949200 911430 0811	949201 911430 1112	949201 911430 1112	–
	SMH 82, SMHA 82	–	949221 911430 1214	949221 911430 1214	949223 911940 1414
	SMH 100, SMHA 100		–	–	949239 911940 1419
SEW	CMP50S, CMP50M, CMP50L	949200 911430 0811	949201 911430 1112	949201 911430 1112	–
	CMP63S, CMP63M, CPM63L	–	949221 911430 1214	949221 911430 1214	949223 911940 1414
Siemens	1FK7032, 1FK7033, 1FK7034	On request	On request	On request	–
	1FK7040, 1FK042, 1FK043, 1FK2205	–			
	1FK2105	–	–	–	949239 911940 1419

RK ROSE+KRIEGER

EP(X) 80	Motor flange	A	D1	D2	E	F	G	Mass [kg]
–	IM B5 56	64/74/74	Ø 60 H8 4,5 deep	Ø11x23	Ø 75	□70	M5 13 deep	0,53/0,65
949903 911940 1420		83/83/86/79	Ø 80 H8 5,7 deep	Ø14x30	Ø 100	□90	M6 14,6 deep	0,73/0,73/0,69/1,07
949905 911940 1920	IM B5 63	96/86	Ø 95 H8 4 deep	Ø19x40	Ø 115	□115	M8 20 deep	1,44
–	IM B5 56	64/74/74	Ø 60 H8 4,5 deep	Ø11x23	Ø 75	□70	M5 13 deep	0,53 / 0,65
949903 911940 1420		83/83/86/79	Ø 80 H8 5,7 deep	Ø14x30	Ø 100	□90	M6 14,6 deep	0,73/0,73/0,69/1,07
–	IM B5 56			Ø14x30				
				Ø19x40				
–	–			Ø14x30				
949905 911940 1920	IM B5 63	96/86	Ø 95 H8 4 deep	Ø19x40	Ø 115	□115	M8 20 deep	1,44
–	IM B5 56			Ø14x30				
				Ø19x40				
–	IM B5 56	64/74/74	Ø 60 H8 4,5 deep	Ø11x23	Ø 75	□70	M5 13 deep	0,53 / 0,65
949903 911940 1420		83/83/86/79	Ø 80 H8 5,7 deep	Ø14x30	Ø 100	□90	M6 14,6 deep	0,73/0,73/0,69/1,07
949905 911940 1920	IM B5 63	96/86	Ø 95 H8 4 deep	Ø19x40	Ø 115	□115	M8 20 deep	1,44
–	IM B5 56			Ø16x40				
–	IM B5 56	64/74/74	Ø 60 H8 4,5 deep	Ø11x23	Ø 75	□70	M5 13 deep	0,53 / 0,65
949903 911940 1420		83/83/86/79	Ø 80 H8 5,7 deep	Ø14x30	Ø 100	□90	M6 14,6 deep	0,73/0,73/0,69/1,07
949905 911940 1920	IM B5 63	96/86	Ø 95 H8 4 deep	Ø19x40	Ø 115	□115	M8 20 deep	1,44
–	IM B5 56	64/74/74	Ø 60 H8 4,5 deep	Ø11x23	Ø 75	□70	M5 13 deep	0,53 / 0,65
949903 911940 1420		83/83/86/79	Ø 80 H8 5,7 deep	Ø14x30	Ø 100	□90	M6 14,6 deep	0,73/0,73/0,69/1,07
–	IM B5 56			Ø14x30				
				Ø19x40				
949905 911940 1920	IM B5 63	96/86	Ø 95 H8 4 deep	Ø19x40	Ø 115	□115	M8 20 deep	1,44

↓

Code No. Motor adaptor: **949905**

Code No. Coupling with specification of shaft diameter 1st end = 19 mm / 2st end = 20 mm **911940 1920**

Selection table - motor adaptor/coupling EP(X) for three-phase motor

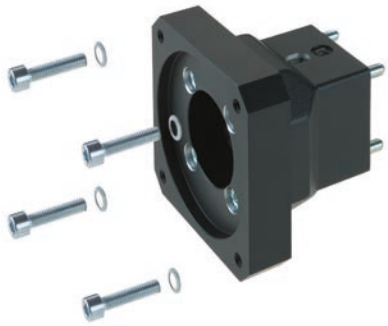

Manufacturers	Motor	EP(X) 30	EP(X) 40	EP(X) 50	EP(X) 60	EP(X) 80
RK Rose + Krieger	90/120W	949996	949614	949614	–	–
		911940 0812	911430 1212	911430 1212		
	180/250W	–	949414	949414	949616	949909
			911430 1214	911430 1214	911940 1414	911940 1420

Code No. Motor adaptor:
949414

Code No. Coupling with specification of shaft diameter
1st end = 12 mm
2st end = 14 mm
911430 1214

RK ROSE+KRIEGER

Motor adaptor

- Simple assembly
- Exact fit due to centering shoulders

Material: Aluminium, black

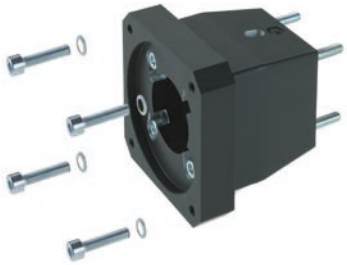

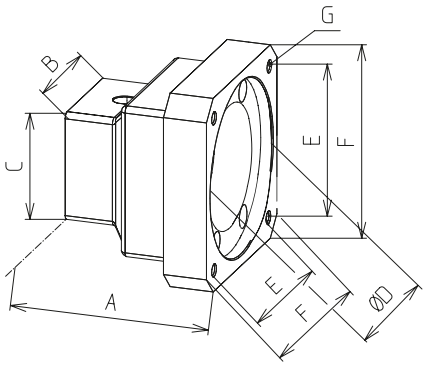

[mm]

Code No.	Type	A	B	C	D	E	F	G
949200	30	64	53,5	53,5	60	53	70	M5
949996	30	64	53,5	53,5	50	65	80	M5
949201	40/50	74	60	60	60	53	70	M5
949221	40/50	83	60	60	80	70,7	90	M6
949614	40/50	83	60	60	50	46	80	M5
949414	40/50	83	60	60	80	100	Ø120	Ø6,6
949223	60	86	80	80	80	70,7	90	M6
949239	60	96	80	80	95	81,3	115	M8
949616	60	86	80	80	80	100	Ø120	Ø6,6
949905	80	86	80	80	80	81,3	115	M8
949909	80	81	80	80	80	100	Ø120	Ø6,6

Coupling

- Small size
- Shaft connection without backlash
- Maintenance-free
- Easy plug-in assembly

Material: Hub – aluminium
Spider ring – polyurethane

To ensure the smooth running of the coupling, a clearance of **D + 3 mm** is required.

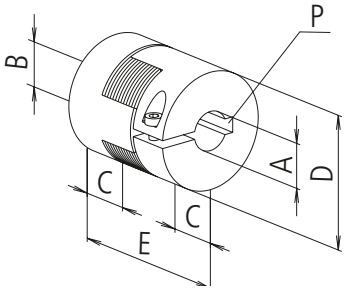

[mm]

Code No.	A	B	C	D	E	P	Torque [Nm] with feather key	Torque [Nm] without feather key
9109200612	6	12	10	22	30	2x2 / 4x4	5	3
9109200895	8	9,5	10	20	30	2x2 / –	5	3
9114300811	8	11	11	30	35	2x2 / 4x4	12	6
9114300816	8	16	11	30	35	2x2 / 5x5	12	6
9114309512	9,5	12	11	30	35	– / 4x4	12	6
9114309514	9,5	14	11	30	35	– / 5x5	12	6
9114301112	11	12	11	30	35	4x4 / 4x4	12	6
9114301114	11	14	11	30	35	4x4 / 5x5	12	6
9114301212	12	12	11	30	35	4x4 / 4x4	12	6
9114301214	12	14	11	30	35	4x4 / 5x5	12	6
9114301216	12	16	11	30	35	4x4 / 5x5	12	6
9119400812	08	12	25	40	65	2x2 / 4x4	17	10
9119401414	14	14	25	40	65	5x5 / 5x5	17	10
9119401416	14	16	25	40	65	5x5 / 6x6	17	10
9119401419	14	19	25	40	65	5x5 / 6x6	17	10
9119401620	16	20	25	40	65	6x6 / 6x6	17	10
9119401920	19	20	25	40	65	6x6 / 6x6	17	10

RK ROSE+KRIEGER

Motor adapter kits on angular gear

- Three-phase- or servomotors with gear from popular manufacturers can be easily connected
- Complete motor adapter kits manufactured to your specifications on request

Scope of delivery:
Motor adapter kit, servo coupling with zero backlash and fixation material

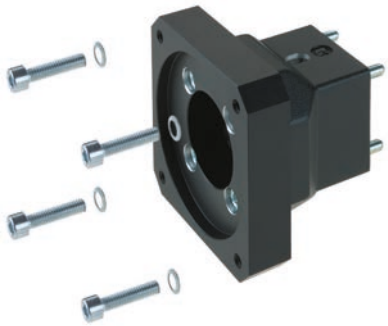

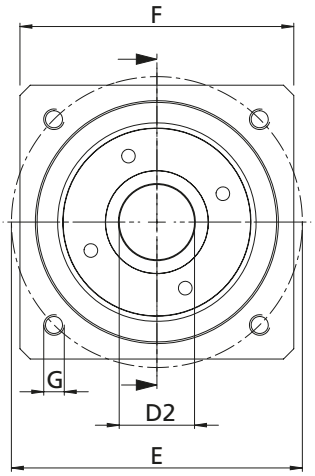

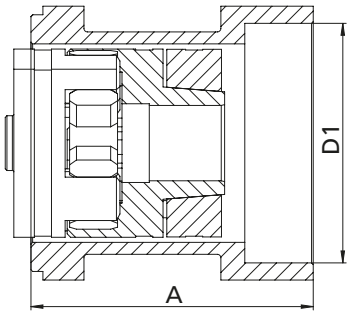

Selection table motor adapter kits for three-phase motor

Manufacturers	Motor	Angular gear system 1-3 EP(X) 30	Angular gear system 1-3 EP(X) 40 / 50 / 60	A	D1	D2	E	F	G	Mass [kg]
RK Rose + Krieger	90/120W	949766	949769	78 / 75,4	Ø 50^{H8} 3 deep/4 deep	Ø 12 x 30	Ø 65	Ø 80	M5 - 15 deep	0,55/0,52

Selection table motor adapter kits servo motors with gear

Manufacturers	Gear	Angular gear system 1-3 EP(X) 30	Angular gear system 1-3 EP(X) 40 / 50 / 60	A	D1	D2	E	F	G	Mass [kg]
Neugart	PLE 60	949768	949771	82,9 / 80,4	Ø 40^{H7} 3 deep/4 deep	Ø 14 x 30	Ø 52	□70 / Ø 62	Ø 5,5	0,58 / 0,25
Eppinger	PE065	949768	949771	82,9 / 80,4	Ø 40^{H7} 3 deep/4 deep	Ø 14 x 30	Ø 52	□70 / Ø 62	Ø 5,5	0,58 / 0,25
Ruhrgetriebe	RPS060	949768	949771	82,9 / 80,4	Ø 40^{H7} 3 deep/4 deep	Ø 14 x 30	Ø 52	□70 / Ø 62	Ø 5,5	0,58 / 0,25
SPN Schwaben Präzision	SPN-ECO (E2) EZ 23	949768	949771	82,9 / 80,4	Ø 40^{H7} 3 deep/4 deep	Ø 14 x 30	Ø 52	□70 / Ø 62	Ø 5,5	0,58 / 0,25
Wittenstein	Alpha CP015 MF	949768	949771	82,9 / 80,4	Ø 40^{H7} 3 deep/4 deep	Ø 14 x 30	Ø 52	□70 / Ø 62	Ø 5,5	0,58 / 0,25

Selection table motor adapter kits for motors with NEMA-Flange

Manufacturers	Motor	Angular gear system 1-3 EP(X) 30	Angular gear system 1-3 EP(X) 40 / 50 / 60	Motor-flange	A	D1	D2	E	F	G	Mass [kg]
RK Rose + Krieger	Stepper motor PD6S	949767	949770	NEMA 34	84,9/82,4	Ø 73^{H8} 4 deep/3 deep	Ø 14 x 35	□ 69,5	□ 86	M6 - 15 deep	0,76/0,75
Various	All motors with NEMA 34 motor flange	949767	949770	NEMA 34	84,9/82,4	Ø 73^{H8} 4 deep/3 deep	Ø 14 x 35	□ 69,5	□ 86	M6 - 15 deep	0,76/0,75

Scale

- Self-adhesive
- 4 mm high figures

Material:
Steel band, plastic-coated

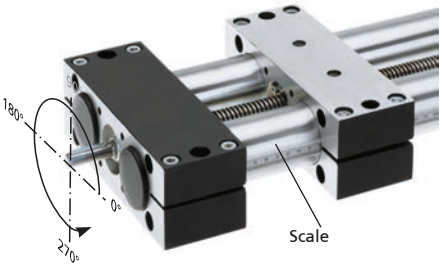

Image shows scale to be read from left to right. Standard mounting at 0° (180° mounting of the left guiding tube, to be read from right to left)

[mm]

Code No.	Type	Can be read from	Length	B	Version
On request	30*	left to right	0-1000	8	fitted
	40-60*	right to left	0-1000	10	fitted
		left to right	0-1000	10	fitted
		left to right	0-2000	10	fitted
		right to left	0-2000	10	fitted

* In the case of Type 18, a scale can be engraved in the guiding tube if required Please specify the position on the tube if relevant.
Type 80 available on request

RK ROSE+KRIEGER

Positioning indicator

- Permitted ambient temperature +80°C
- Figure height 6 mm
- Indication accuracy ± 0.1 mm
- If positioning indicators are fitted, the linear units are delivered exclusively with ball bearings

Material: Housing polyamide 6 Orange RAL 2004, Steel parts, corrosion-protected

Scope of delivery: Positioning indicator, clamping ring, shaft extension and fastenings

Note: "rising" and "falling" versions refer to the clockwise rotation of the drive shaft.

Installation position: horizontal

Installation position: vertical

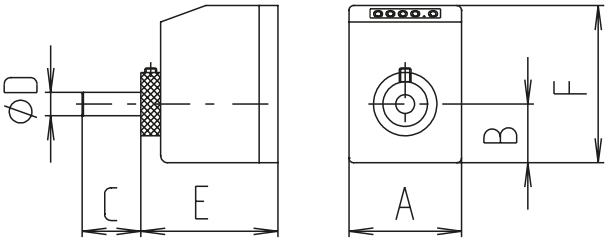

[mm]

Type	Installation position	Connection	Code No.	Version	Code No.	Version	A	B	C	D	E	F
18	horizontal	Directly to EP(X)	91061	2mm rising	91012	4mm rising	48	29	17	6	60	67
18			91071	2mm falling	910137	4mm falling	48	29	17	6	60	67
18	vertical		91081	2mm rising	910138	4mm rising	48	29	17	6	60	67
18			91091	2mm falling	910139	4mm falling	48	29	17	6	60	67
30	horizontal	Directly to EP(X) or on angular drive	91043	3mm rising	91010	6mm rising	48	25	18	8	59	67
30			91053	3mm falling	91029	6mm falling	48	25	18	8	59	67
30	vertical		91063	3mm rising	91020	6mm rising	48	25	18	8	59	67
30			91073	3mm falling	91019	6mm falling	48	25	18	8	59	67
40	horizontal	Directly to EP(X) or on angular drive	91004	4mm rising	91030	8mm rising	48	25	38	12	59	67
40			91014	4mm falling	91039	8mm falling	48	25	38	12	59	67
40	vertical		91024	4mm rising	91040	8mm rising	48	25	38	12	59	67
40			91034	4mm falling	91041	8mm falling	48	25	38	12	59	67
50	horizontal	Directly to EP(X) or on angular drive	91045	4mm rising	91046	8mm rising	48	25	38	12	59	75
50			91055	4mm falling	91047	8mm falling	48	25	38	12	59	75
50	vertical		91065	4mm rising	91048	8mm rising	48	25	38	12	59	75
50			91075	4mm falling	91049	8mm falling	48	25	38	12	59	75
60	horizontal	Directly to EP(X) or on angular drive	910120	5mm rising	910124	10mm rising	48	25	38	14	60	81
60			910121	5mm falling	910125	10mm falling	48	25	38	14	60	81
60	vertical		910122	5mm rising	910126	10mm rising	48	25	38	14	60	81
60			910123	5mm falling	910127	10mm falling	48	25	38	14	60	81
80	horizontal	Directly to EP(X)	91110	6mm rising	910140	12mm rising	64	29	31	20	60	94
80			91111	6mm falling	910141	12mm falling	64	29	31	20	60	94
80	vertical		91112	6mm rising	910142	12mm rising	64	29	31	20	60	94
80			91113	6mm falling	910143	12mm falling	64	29	31	20	60	94

*Version with double lead e.g. for installation on righthand/ lefthand thread screws

Holder for mechanical limit switch

- Limit switch can be moved and fixed axially

Type	18-60	80
Max. voltage	250 V AC	230 V AC
Max. switching current	6 A	4 A
Max. starting current	16 A	–
Operating frequency	Max. 6000/h	Max. 5000/h
Mechanical lifetime	10 million switching cycles	20 million switching cycles
Axis lever adjustment	locking at 10° increments	
Protection class	IP 65	IP 67
Ambient temperature	-30°C to +80°C	

Type 18-60

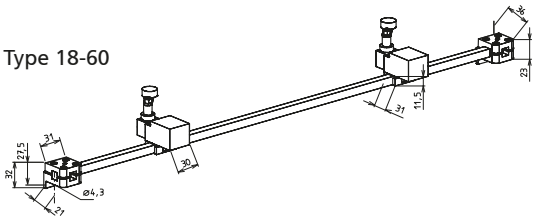

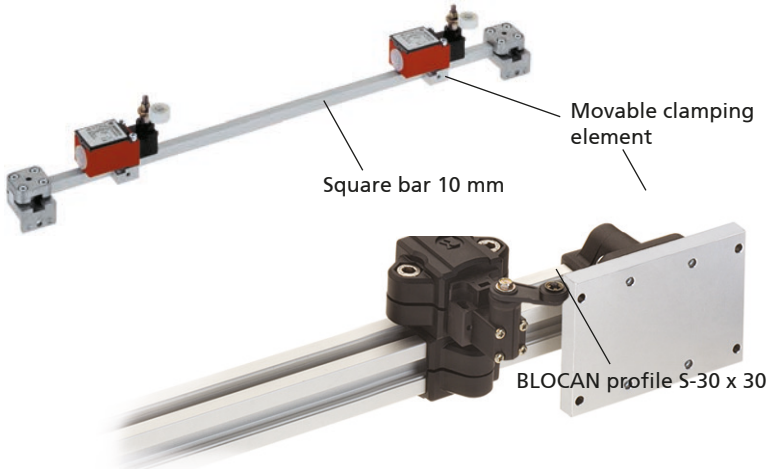

Type 80

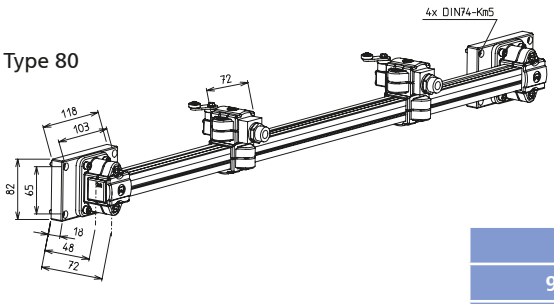

Code No.	Type	Basic length	Version
92961_ _ _ _	18-60	245	with switch
92962_ _ _ _	18-60	245	without switch
92933_ _ _ _	80	380	with switch
92934_ _ _ _	80	380	without switch

Total length of linear unit

Mechanical limit switch

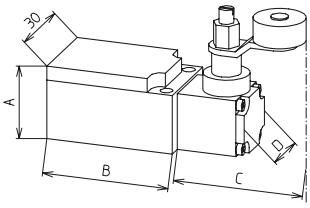

[mm]

Code No.	Type	Switching function	A	B	C	D
91905	18-60	NC/NO	26.5	45	45.5	21
91908	80	NC/NO	30	58.5	46	20
91907	Clamping element 18-60 for limit switch					
91904	Clamping element 80 for limit switch					

RK ROSE+KRIEGER

Holder for inductive limit switch

- Limit switch can be moved and fixed axially

Type 18-60

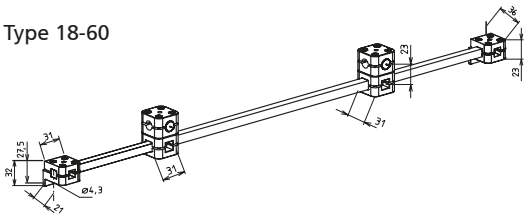

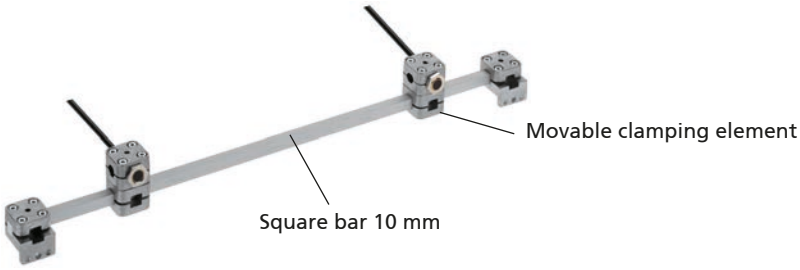

Code No.	Type	Basic length	Version
92965_ _ _ _	18-60	125	without switch

Total length of linear unit

Inductive limit switch

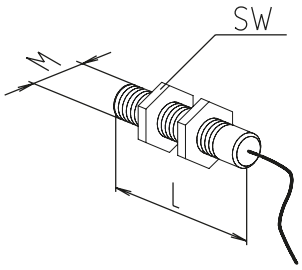

Type	18-60	80
Voltage	10 - 30 V DC	
Max. switching current	200 mA	150 mA
Operating distance	4 mm for steel	2 mm for steel
Protection class	IP 67	
Ambient temperature	-25°C to +70°C	
Cable lengths	2m	

[mm]

Code No.	Type	Switching function	L	M	Wrench size (SW)
92825	18-60	Changeover	50	12x1	17
92826	80	Changeover	40	8x1	13
92802	Clamping element 18-60 for limit switch				
92804	Clamping element 80 for limit switch				

EP(X)-II 30/40 tubular linear unit – Technical data

The latest generation of EP(X)-II 30/40 twin tube units – compensates for high bending moments during hand and motor-driven adjustments

Precise / plane mounting surface
✓ Distortion-free installation

Bellows
✓ Protection class IP 40

Integrated spindle clamping
✓ Manual force locking
spindle clamping optional

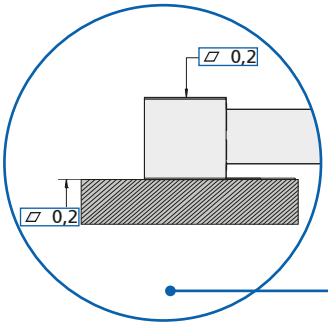

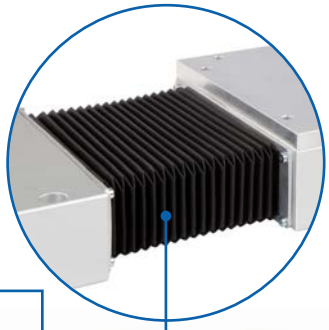

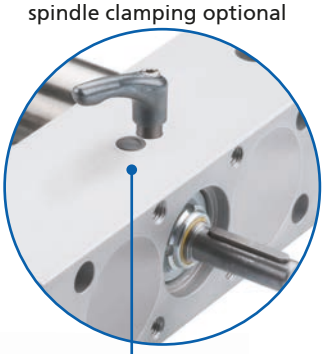

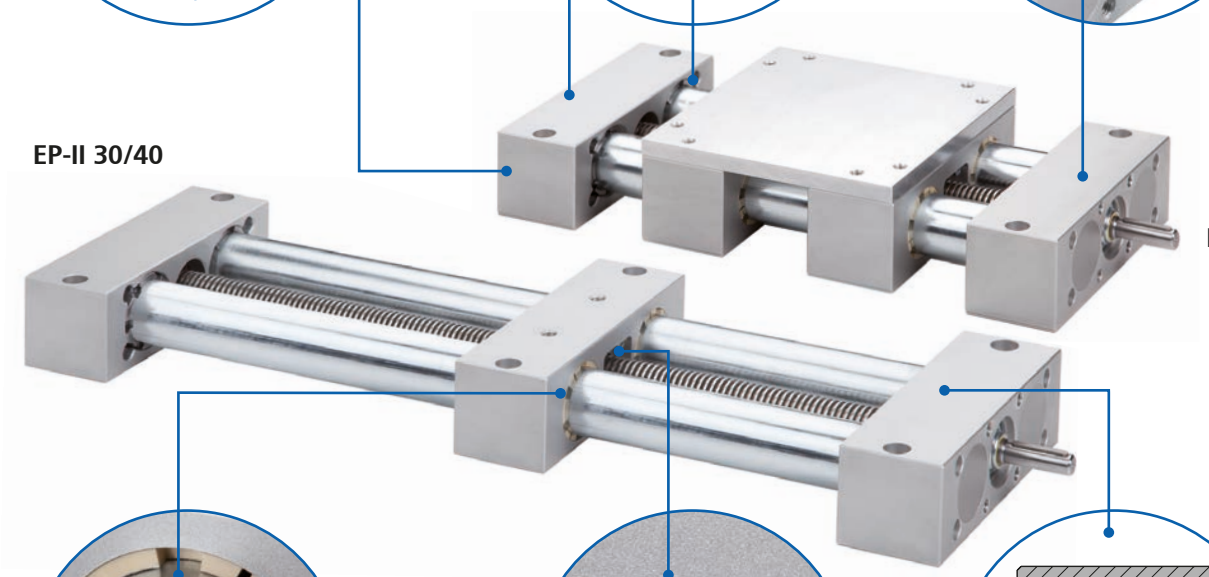

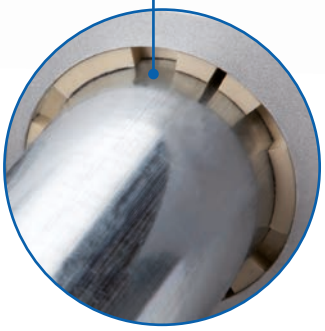

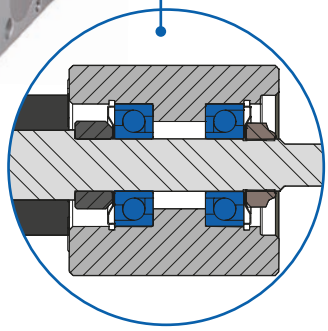

Carriage with slide bushings as standard
✓ Longer lifetime due sleeves made of high performance material

New guide nut concept
✓ Split nuts, simple replacement – no need to dismantle the linear unit
✓ Longer lifetime due to high performance materials

Reduced axial play
✓ Optimised lead screw with fixed bearing in end element

Features:

- High moment capacity
- Version available with large fixing plate
- Identical connection sizes as previous version

Versions – size 30/40

- EP-II 30/40
  Right or lefthand thread
  Right and lefthand thread
  Split Screw
- EPX-II 30/40
  Right or lefthand thread
  Right and lefthand thread
  Split Screw

Options:

- Corrosion-protected units
- Second free-running carriage
- Protect: with bellows and protection class IP 40
- Spindle clamping only at ball-screw spindle units

EP(X)-II 30/40 tubular linear unit – Table of contents

Properties/performance data

- General information / operating conditions . 138
- Load data 139
- Geometric moments of inertia 139

Versions
(Dimensions, order numbers)

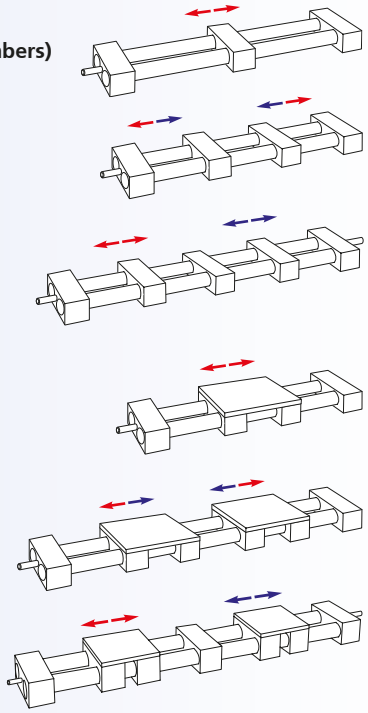

- EP-II 30/40 right or lefthand thread 140
- EP-II 30/40 right and lefthand thread 142
- EP-II 30/40 split screw 144
- EPX-II 30/40 right or lefthand thread 146
- EPX-II 30/40 right and lefthand thread..... 148
- EPX-II 30/40 split screw 150

Accessories

Drive

- Handwheel 152
- Chain wheel..... 153
- Timing-belt pulley 153
- Angle drive 154
- Flange bearing unit 157
- Transmission unit..... 157
- Motor adapter / coupling 162

Position determination

- Positioning indicator..... 166
- Limit switch 167

EP(X)-II 30/40 tubular linear unit – Technical data

General information / operating conditions

	EP-II 30	EPX-II 30	EP-II 40	EPX-II 40
Guide	Slide guide			
Installation position	Any position			
Max. speed	0.015 m/s (stroke independent)		0.02 m/s (stroke independent)	
Max. acceleration	3 m/s²			
Repeatability	± 0,1 mm			
Max. no-load torque	0,6 Nm	0,7 Nm	0,7 Nm	0,8 Nm
Drive	Trapezoidal screw, Ø 14, pitch 3		Trapezoidal screw, Ø 20, pitch 4	
Lead accuracy	(± 0,1 / 300 mm)			
Self-Locking	Yes with spindle clamping, no without spindle clamping			
Duty cycle	S3, 30%, base 1h			
Ambient temperature	0 to +60°C			
Protection class	Basic: no / Protect: IP 40			

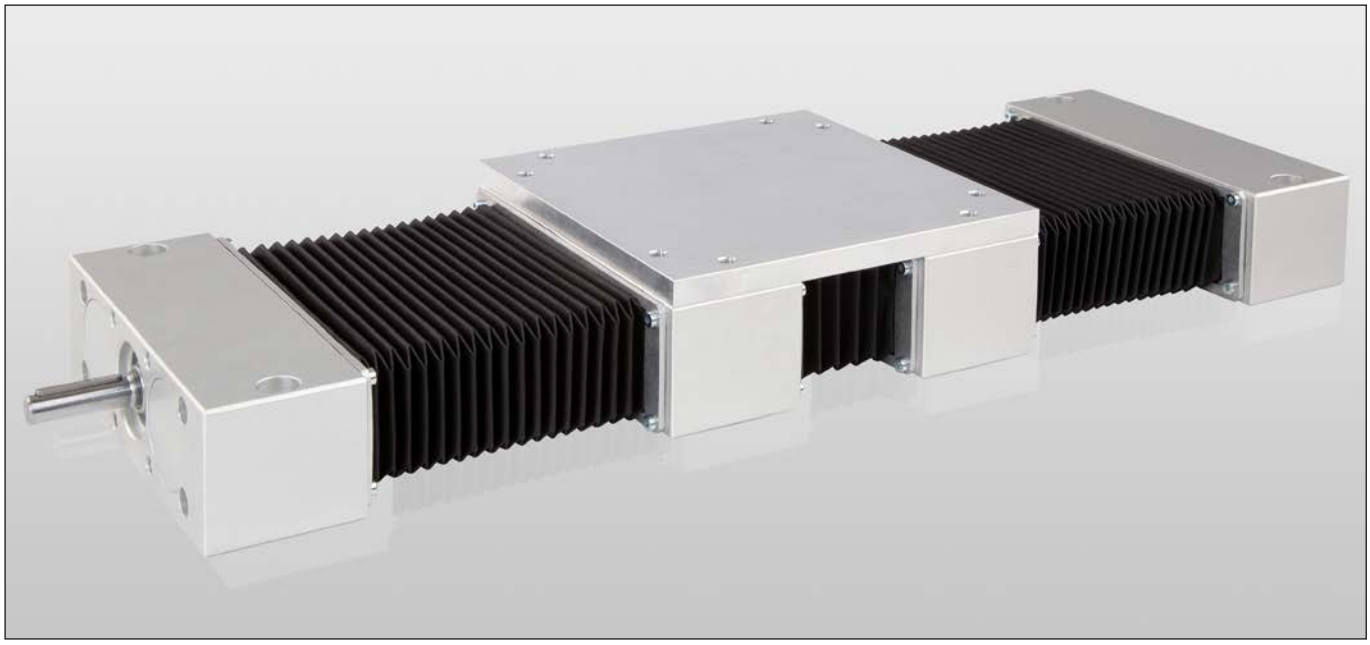

Image shows an EPX in the Protect version (with bellows)

Static load data*

F Force [N]

M Moment [Nm]

I Geometric moment of inertia [cm^4]

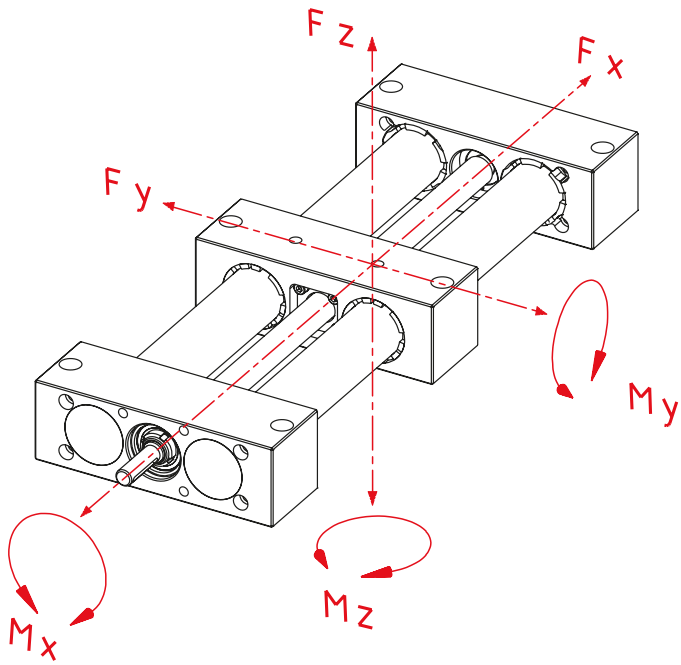

* with reference to carriage (deflection of guide element f = 0.5 mm, static, end elements supported)

Type	Fx	Fy*			Fz*			Mx	My	Mz
Total length [mm]		500	1000	1500	500	1000	1500			
EP-II 30	800	1000	800	500	550	300	100	60	60	75
EPX-II 30	800	1400	1200	700	650	450	200	80	110	140
EP-II 40	1000	3500	2600	1300	2000	580	120	120	130	150
EPX-II 40	1000	6000	3100	1800	2200	680	220	160	190	240

Geometric moment of inertia

Type	Iy	Iz [cm^4]
EP(X)-II 30	3.47	46.57
EP(X)-II 40	14.84	198.06

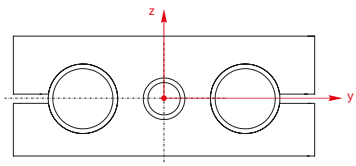

EP-II 30/40 – Dimensions / ordering data

Order informations:

- Corrosion-protected units available on request
- Second non driven carriage available on request
- Scale upon request
- Other screw leads available on request

Version ■ **Right *or* lefthand thread**

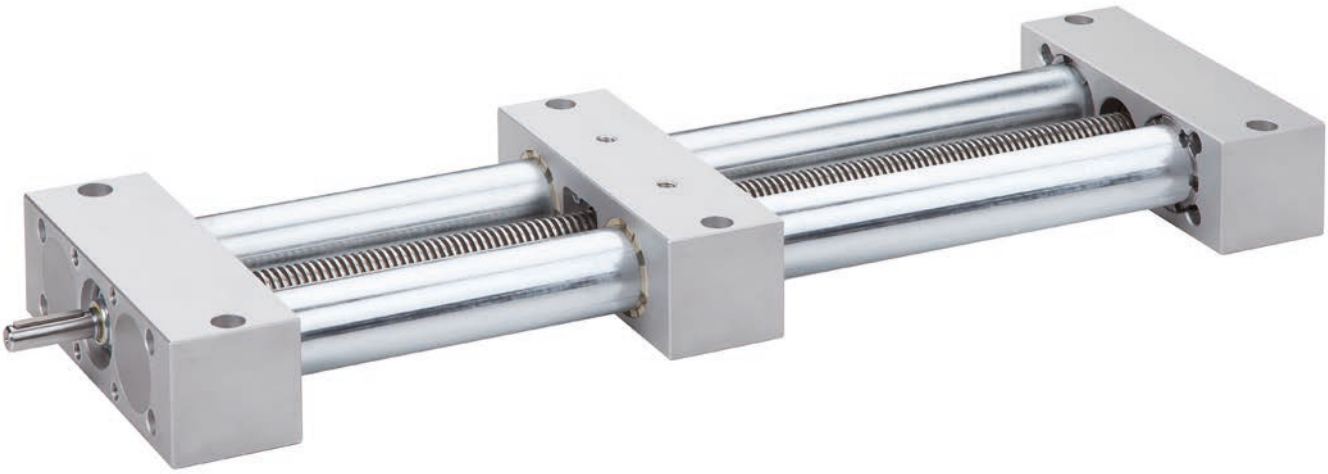

Code No.	Type	Spindle	Basic length	B	C	D1	D2	D3	F	G1	G2	H	J	L1	L2	M1	M2	M3
79_301_ _ _AA_ _ _ _	30	Tr 14x3	150	130	54	8	–	30 H8	2	M6 / 12 deep	M6 / 9 deep	27	50	26	–	40x30	114	70
79_303_ _ _AA_ _ _ _							8								26			
79_401_ _ _AA_ _ _ _	40	Tr 20x4	180	180	63	12	–	40 H8	3	M8 / 20 deep	M8 / 8 deep	31.5	60	38	–	46	160	90
79_403_ _ _AA_ _ _ _							12								38			

_ _ _ _ Total length = basic length + travel [mm] **(Minimum travel: Basic 25 mm, Protect 120 mm)**

Version:
1 = Basic
2 = Protect **(For the Protect version, the stroke must be ordered longer than required by a factor of 1.5 due to the space required for installation of the bellows.)**

A = standard
B = c/w integrated spindle clamping (Only with spindle bearing ball bearing)

Spindle bearing:
1 = ball bearing
0 = slide bearing

Spindle version:
1 = righthand thread
2 = lefthand thread

Total length = basic length + travel

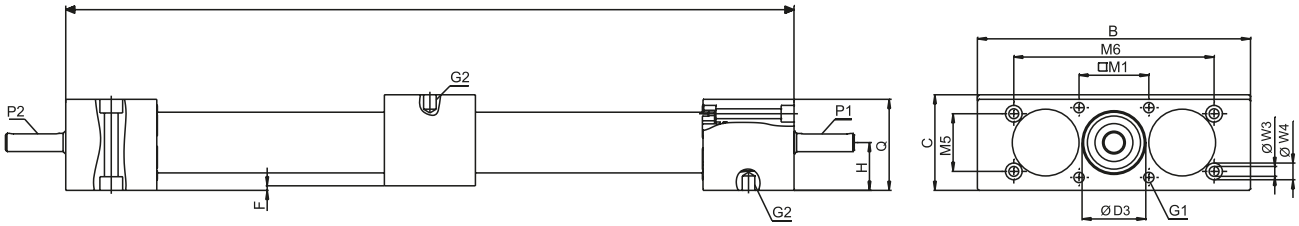

Total length – R

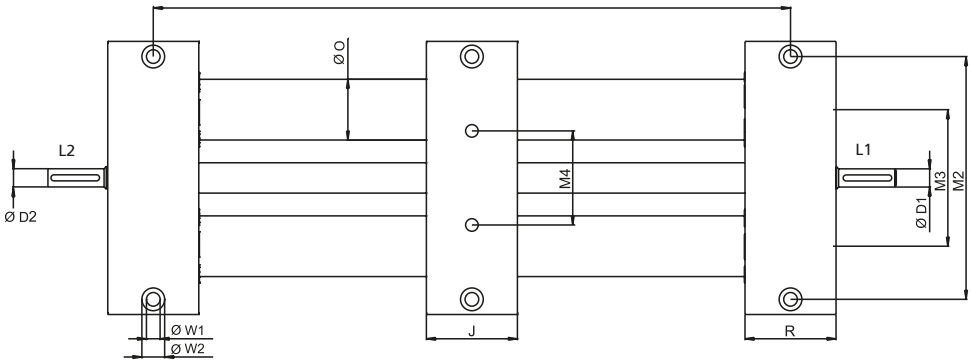

[mm]

M4	M5	M6	O	P1	P2	Q	R	W1	W2	W3	W4	Max. travel	Mass [kg]	
													Basic length	per 100 mm travel
42	–	–	30	2x2x20	–	52	50	7	11 / 7 deep	–	–	1424	2.6	0.4
					2x2x20							1398		
62	38	132	40	4x4x32	–	60	60	9	15 / 9 deep	6.5	11 / 8.5 deep	2820	5.53	0.96
					4x4x32									

EP-II 30/40 – Dimensions / ordering data

Order instructions:

- Please specify basic length and total travel when placing an order
- Corrosion-protected units available on request
- Second non driven carriage available on request
- Scale upon request
- Protect: version with bellows optional (IP 40)
- Other screw leads available on request

Version ■ **Right *and* lefthand thread**

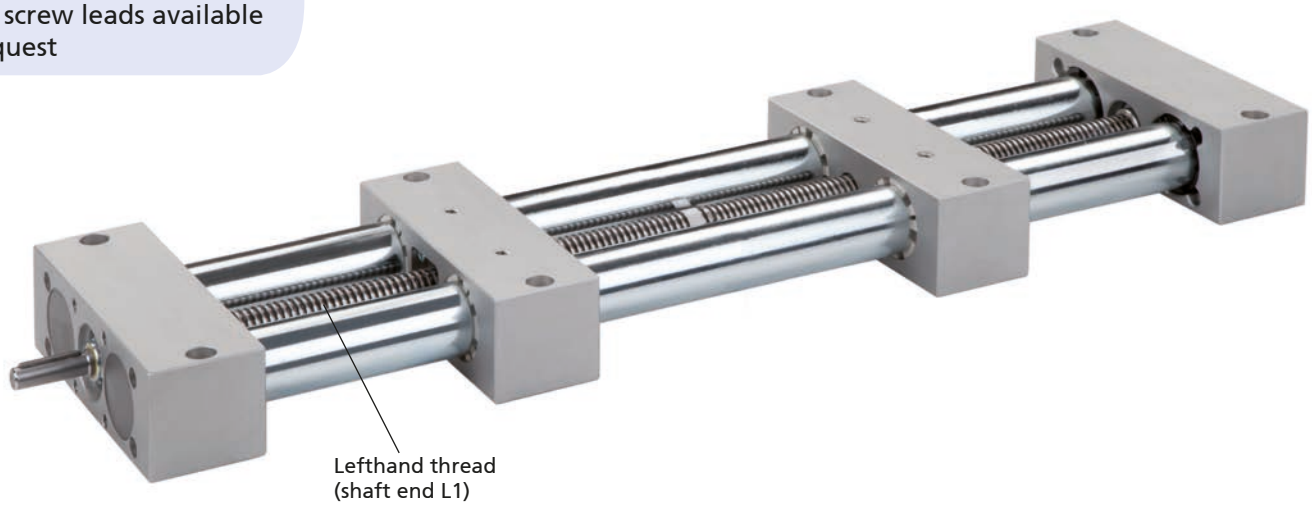

Code No.	Type	Spindle	Basic length	B	C	D1	D2	D3	F	G1	G2	H	J	L1	L2	M1	M2	M3
793301_ _1AA_ _ _ _	30	Tr 14x3	200	130	54	8	–	30 H8	2	M6 / 12 deep	M6 / 9 deep	27	50	26	–	40x30	114	70
793303_ _1AA_ _ _ _							8								26			
793401_ _1AA_ _ _ _	40	Tr 20x4	240	180	63	12	–	40 H8	3	M8 / 20 deep	M8 / 8 deep	31.5	60	38	–	46	160	90
793403_ _1AA_ _ _ _							12								38			

_ _ _ _ Total length = basic length + total travel [mm] **(minimum total travel 50 mm)**

A = standard
B = c/w integrated spindle clamping (Only with spindle bearing ball bearing)

Spindle bearing:
1 = ball bearing
0 = slide bearing

Total length = basic length + travel

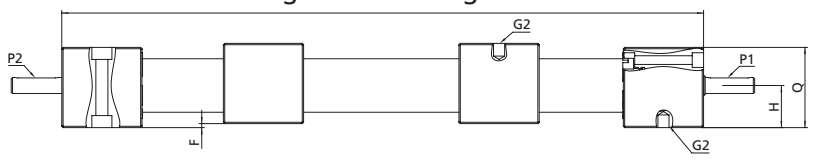

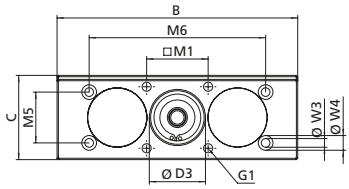

Total length – R

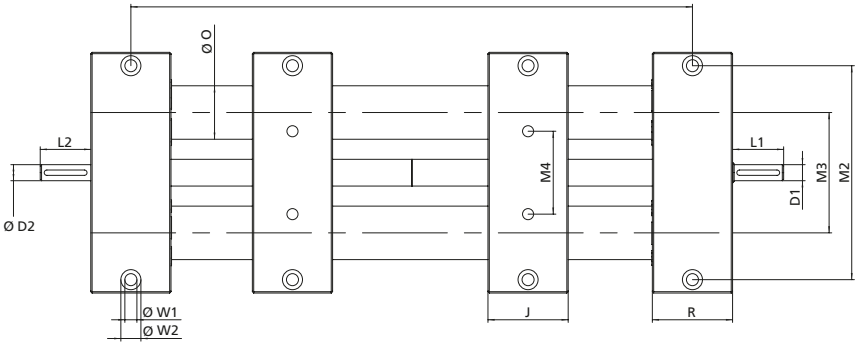

[mm]

M4	M5	M6	O	P1	P2	Q	R	W1	W2	W3	W4	Max. travel	Mass [kg]	
													Basic length	per 100 mm travel
42	–	–	30	2x2x20	– 2x2x20	52	50	7	11 / 7 deep	–	–	1800	3.43	0.4
62	38	132	40	4x4x32	– 4x4x32	60	60	9	15 / 9 deep	6.5	11 / 8.5 deep	2760	7.73	0.96

EP-II 30/40 – Dimensions / ordering data

Order instructions:

- Please specify basic length and total travel when placing an order
- Corrosion-protected units available on request
- Second non driven carriage available on request
- Scale upon request
- Protect: version with bellows optional (IP 40)
- Other screw leads available on request

Version ■ **Split screw**

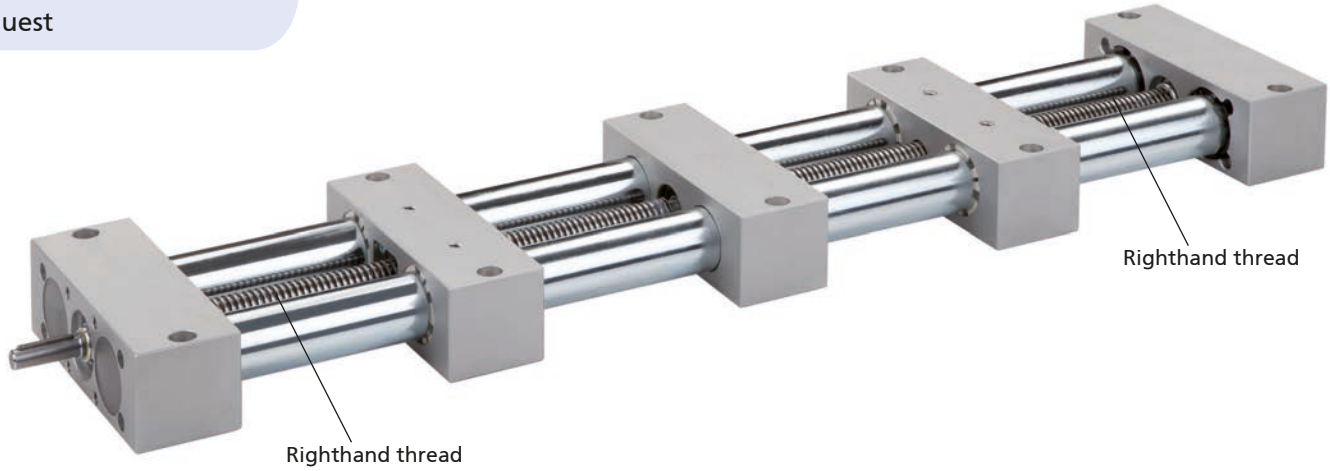

Code No.	Type	Spindle	Basic length	B	C	D1	D2	D3	F	G1	G2	H	J	L1	L2	M1	M2	M3
7943031_1AA_ _ _ _	30	Tr 14x3	250	130	54	8	8	30 ^{H8}	2	M6 / 12 deep	M6 / 9 deep	27	50	26	26	40x30	114	70
7944031_1AA_ _ _ _	40	Tr 20x4	300	180	63	12	12	40 ^{H8}	3	M8 / 20 deep	M8 / 8 deep	31.5	60	38	38	46	160	90

_ _ _ _ Total length = basic length + total travel [mm] **(minimum total travel 50 mm)**

A = standard
B = c/w integrated spindle clamping

Total length = basic length + travel

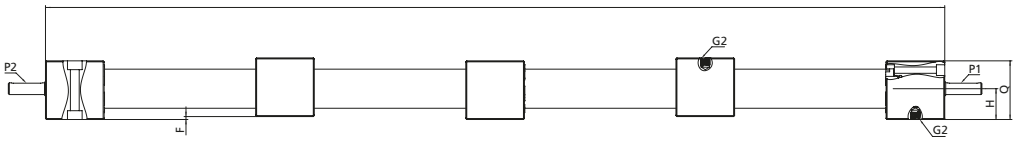

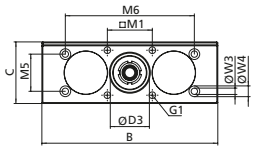

Total length – R

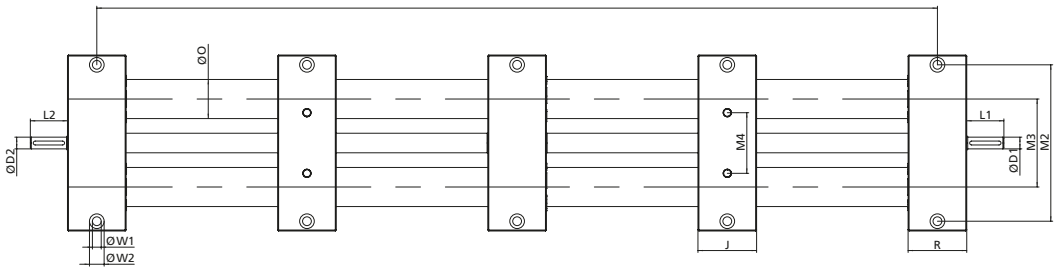

[mm]

M4	M5	M6	O	P1	P2	Q	R	W1	W2	W3	W4	Max. travel	Mass [kg]	
													Basic length	per 100 mm travel
42	–	–	30	2x2x20	2x2x20	52	50	7	11 / 7 deep	–	–	1375	4.2	0.4
62	38	132	40	4x4x32	4x4x32	60	60	9	15 / 9 deep	6.5	11 / 8.5 deep	2700	9.32	0.96

EPX-II 30/40 – Dimensions / ordering data

Order informations:

- Corrosion-protected units available on request
- Second non driven carriage available on request
- Scale upon request
- Other screw leads available on request

Version ■ **Right *or* lefthand thread**

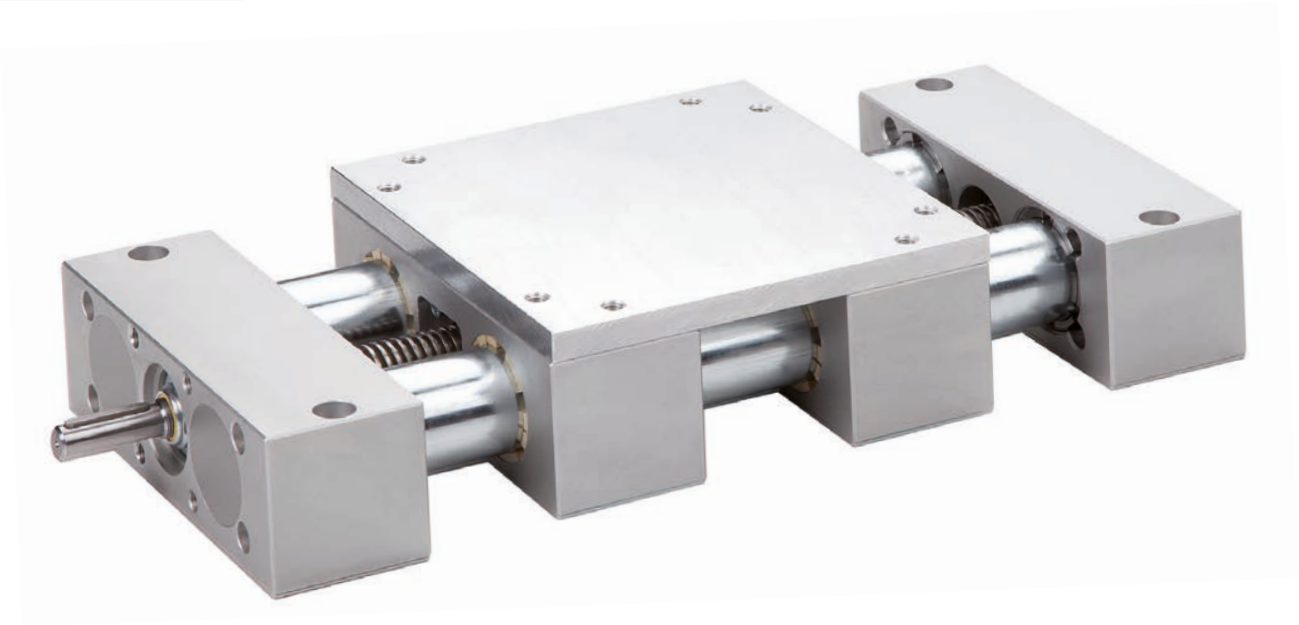

Code No.	Type	Spindle	Basic length	B	C	D1	D2	D3	F	G1	G2	G3	H	H2	J	L1	L2	M1	M2
79_301_ _ _AA_ _ _ _	30	Tr 14x3	230	130	64	8	–	30 H8	2	M6 / 12 deep	M6	M6 / 9 deep	27	10	130	26	–	40x30	114
79_303_ _ _AA_ _ _ _							8										26		
79_401_ _ _AA_ _ _ _	40	Tr 20x4	300	180	75	12	–	40 H8	3	M8 / 20 deep	M8	M8 / 8 deep	31.5	12	180	38	–	46	160
79_403_ _ _AA_ _ _ _							12										38		

_ _ _ _ **Total length = basic length + travel [mm] (Minimum travel: Protect 120 mm)**

Version:
1 = Basic
2 = Protect **(For the Protect version, the stroke must be ordered longer than required by a factor of 1.5 due to the space required for installation of the bellows.)**

A = standard
B = c/w integrated spindle clamping (Only with spindle bearing ball bearing)

Spindle bearing:
1 = ball bearing
0 = slide bearing

Spindle version:
5 = righthand thread
6 = lefthand thread

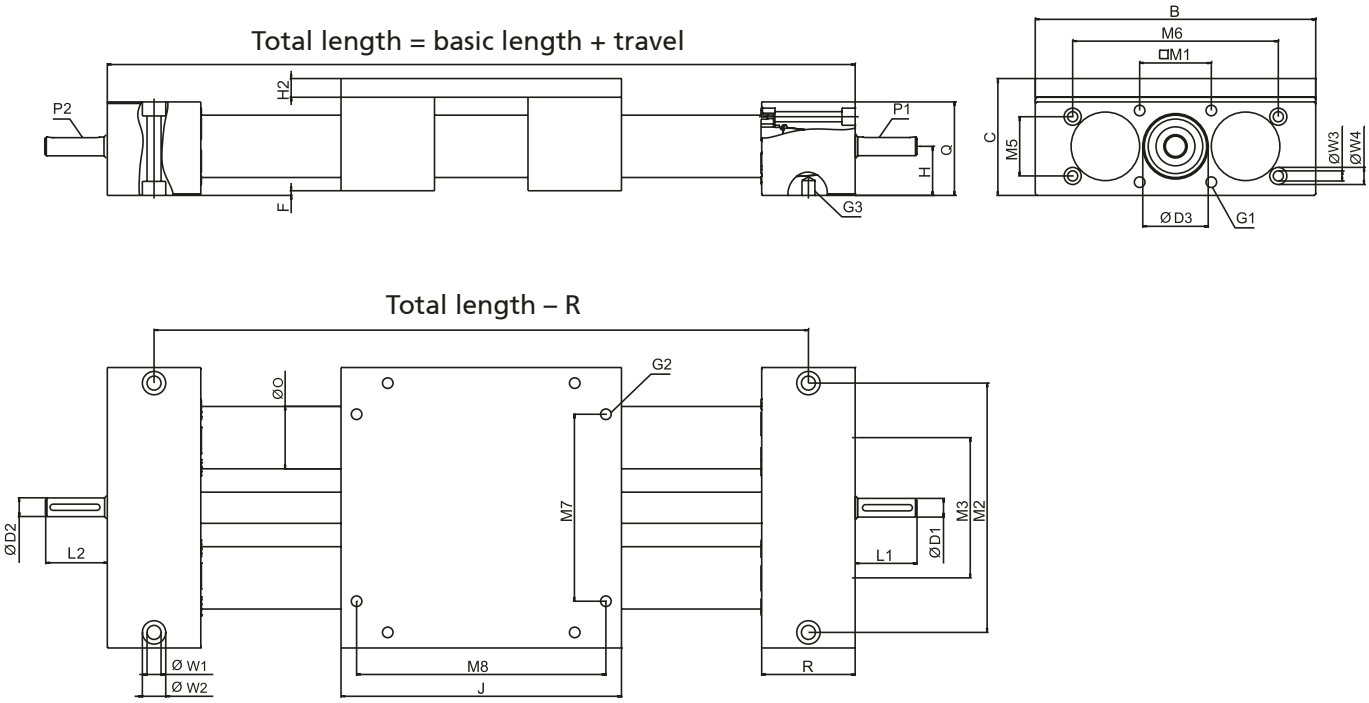

[mm]

M3	M5	M6	M7	M8	O	P 1	P 2	Q	R	W1	W2	W3	W4	Max. travel	Mass [kg] Basic length	Mass [kg] per 100 mm travel
70	–	–	80	114	30	2x2x20	–	52	50	7	11 / 7 deep	–	–	1344	4.1	0.4
							2x2x20							1318		
90	38	132	120	160	40	4x4x32	–	60	60	9	15 / 9 deep	6.5	11 / 8.5 deep	2700	8.95	0.96
							4x4x32									

EPX-II 30/40 – Dimensions / ordering data

Order instructions:

- Please specify basic length and total travel when placing an order
- Corrosion-protected units available on request
- Second non driven carriage available on request
- Scale upon request
- Protect: version with bellows optional (IP 40)
- Other screw leads available on request

Version ■ **Right *and* lefthand thread**

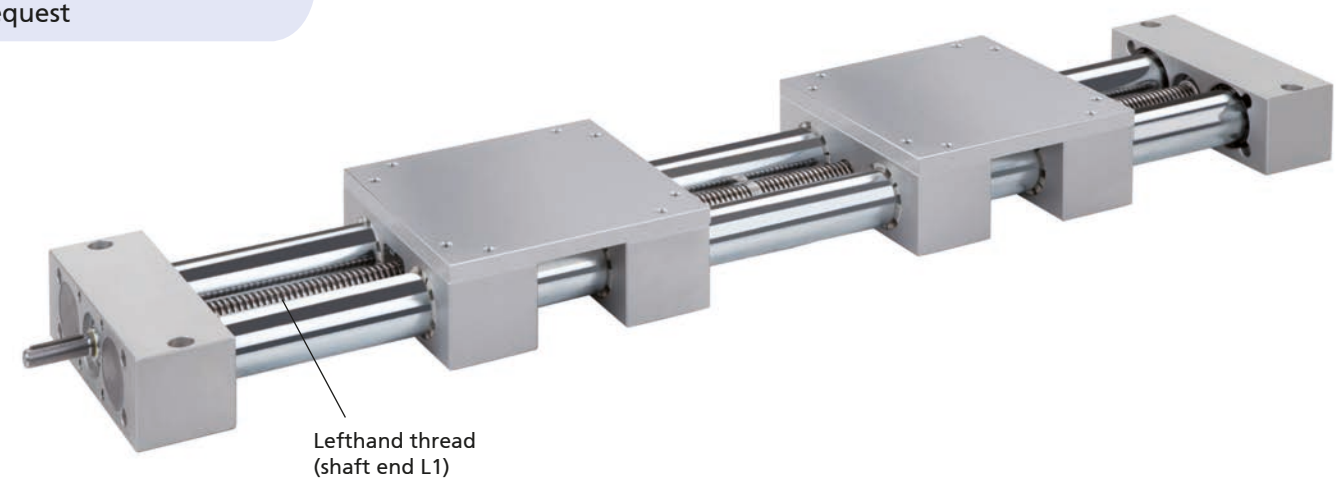

Code No.	Type	Spindle	Basic length	B	C	D1	D2	D3	F	G1	G2	G3	H	H2	J	L1	L2	M1	M2
797301_ _1AA_ _ _ _	30	Tr 14x3	360	130	64	8	–	30 H8	2	M6 / 12 deep	M6	M6 / 9 deep	27	10	130	26	–	40x30	114
797303_ _1AA_ _ _ _							8										26		
797401_ _1AA_ _ _ _	40	Tr 20x4	480	180	75	12	–	40 H8	3	M8 / 20 deep	M8	M8 / 8 deep	31.5	12	180	38	–	46	160
797403_ _1AA_ _ _ _							12										38		

_ _ _ _ Total length = basic length + travel [mm]

A = standard
B = c/w integrated spindle clamping (Only with spindle bearing ball bearing)

Spindle bearing:
1 = ball bearing
0 = slide bearing

Total length = basic length + travel

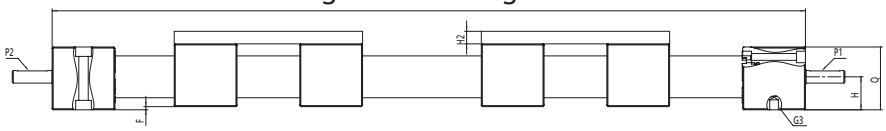

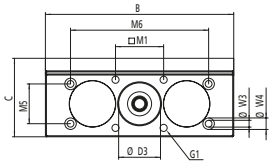

Total length – R

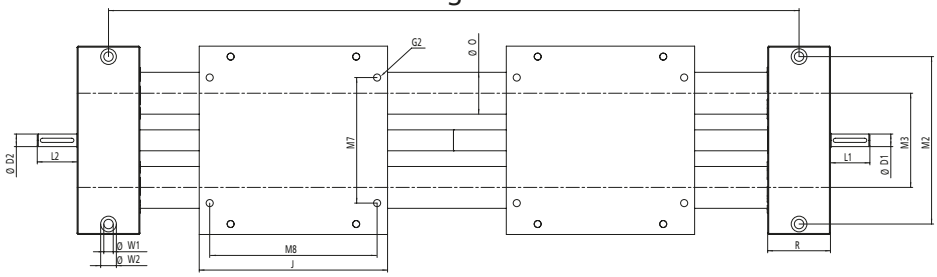

[mm]

M3	M5	M6	M7	M8	O	P 1	P 2	Q	R	W1	W2	W3	W4	Max. travel	Mass [kg]	
															Basic length	per 100 mm travel
70	–	–	80	114	30	2x2x20	– 2x2x20	52	50	7	11 / 7 deep	–	–	1640	6.3	0.4
90	38	132	120	160	40	4x4x32	– 4x4x32	60	60	9	15 / 9 deep	6.5	11 / 8,5 deep	2520	14.17	0.96

EPX-II 30/40 – Dimensions / ordering data

Order instructions:

- Please specify basic length and total travel when placing an order
- Corrosion-protected units available on request
- Second non driven carriage available on request
- Scale upon request
- Protect: version with bellows optional (IP 40)
- Other screw leads available on request

Version ■ **Split screw**

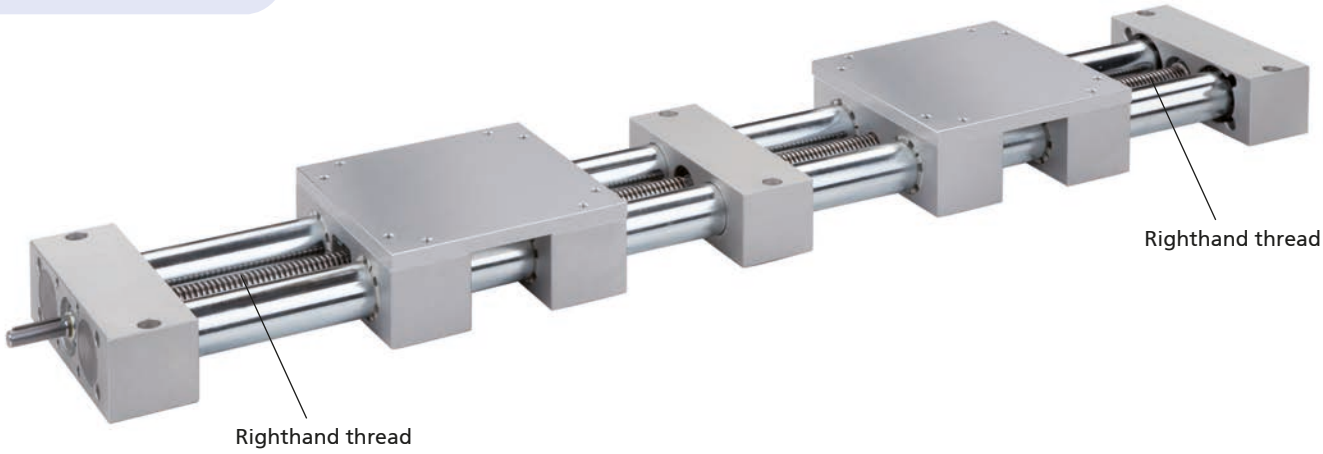

Code No.	Type	Spindel	Basic length	B	C	D1	D2	D3	F	G1	G2	G3	H	H2	J	L1	L2	M1	M2
7983031_1AA_ _ _ _	30	Tr 14x3	410	130	64	8	8	30 ^{H8}	2	M6 / 12 deep	M6	M6 / 9 deep	27	10	130	26	26	40x30	114
7984031_1AA_ _ _ _	40	Tr 20x4	540	180	75	12	12	40 ^{H8}	3	M8 / 20 deep	M8	M8 / 8 deep	31,5	12	180	38	38	46	160

_ _ _ _ Total length = basic length + travel [mm]

A = standard
B = c/w integrated spindle clamping

Total length = basic length + travel

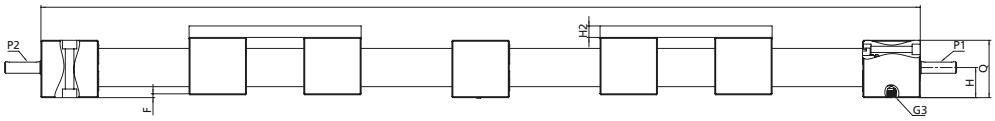

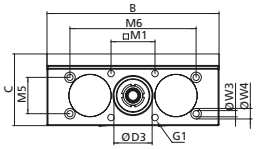

Total length – R

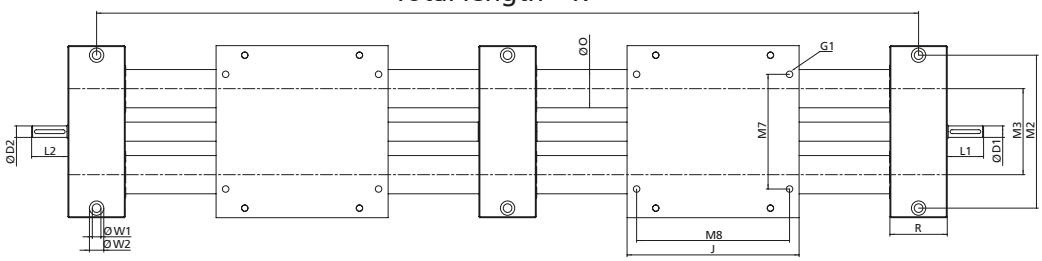

[mm]

M3	M5	M6	M7	M8	O	P 1	P 2	Q	R	W1	W2	W3	W4	Max. travel	Mass [kg]	
															Basic length	per 100 mm travel
70	–	–	80	114	30	2x2x20	2x2x20	52	50	7	11 / 7 deep	–	–	1295	7.2	0.4
90	38	132	120	160	40	4x4x32	4x4x32	60	60	9	15 / 9 deep	6.5	11 / 8.5 deep	2460	16.16	0.96

Handwheel

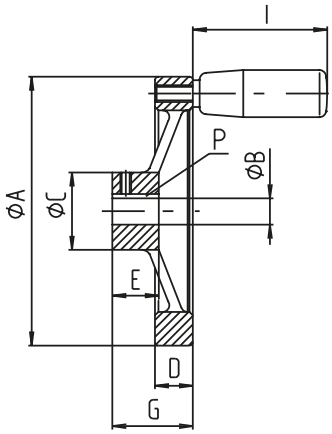

Material: Die-cast aluminium, black powder-coated

Diam. 140-200

Diam. 60-100

[mm]

Code No.	Type	ØA	B	C	D	E	G	P	I
90913	30	100	8	28	14	17	30	2x2	52
90915	40	100	12	28	14	17	30	4x4	52
90905	40	140	12	36	16.5	19.5	36	4x4	66

Chain wheel

- Other sizes on request

Material: Steel, 500 N/mm² min.

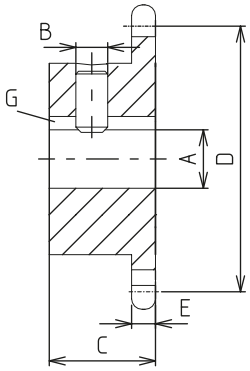

[mm]

Code No.	Type	A	B	C	D	E	G	No. of teeth	Size
91703	30	8	M6	18	41.1	4.5	2x2	10	1/2 x 3/16"
91704	40	12	M6	20	53	4.5	4x4	13	1/2 x 3/16"

HTD timing belt pulley

- Suitable for maintenance-free continuous operation
- Excellent accuracy and zero backlash during change of direction
- Clampable on feather key

Material: Steel

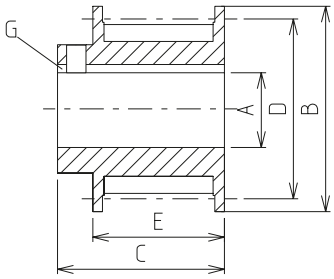

[mm]

Code No.	Type	A	B	C	D	E	G	Tensile force	Pitch
92103	30	8	23	20	19.09	14.5	2x2	220 N	5
92105	40	12	32	26	28.65	20.5	4x4	330 N	5

Order instruction:

- When using angle drives, only use linear units with ball bearings

Angular drive

- Fits all EP(X)-II linear units 30–40
- No shaft extension or adapter necessary
- Can be retrofitted
- Low noise level
- Suitable for manual adjustment and motorized via EHL or unit drive LZ

Technical data

Angular Drive												
Type	Duty cycle		Ambient temperature		Drive speed		Nominal torque [Nm]		Max. torque* [Mm]		Efficiency [%]	
	L	T	L	T	L	T	L	T	L	T	L	T
30	S3 30% basic 1h		0°C to +60°C		0 to 350 min^{-1}		1,90	0,95	8		95	90
40							2,90	1,45	12		95	90

*Briefly. Not a permanent moment. Block travel not permitted.

Configuration examples

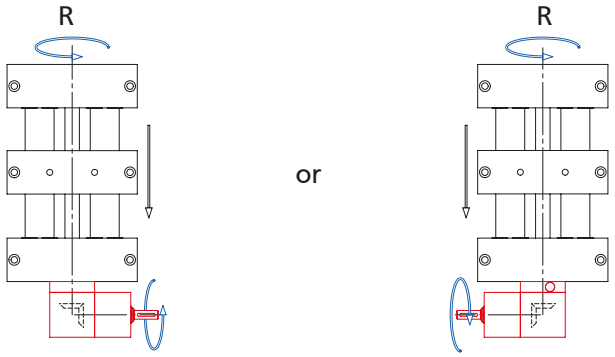

Components needed:

1x EP(X)-II with righthand thread
1x Angular drive – L
1x Flange bearing unit

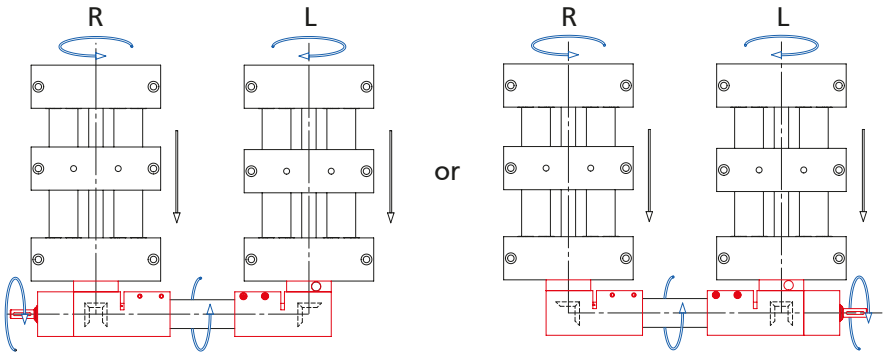

Components needed:

1x EP(X)-II with righthand thread
1x EP(X)-II with lefthand thread
2x Angular drive – T
1x Flange bearing unit
1x Transmission unit

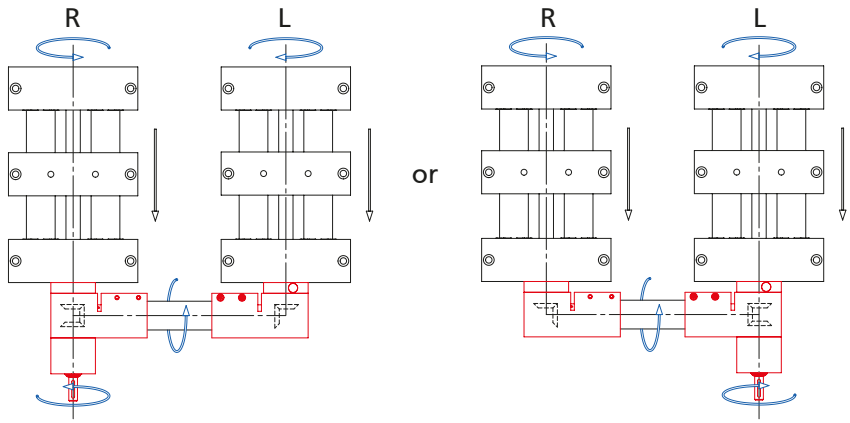

Components needed:

1x EP(X)-II with righthand thread
1x EP(X)-II with lefthand thread
2x Angular drive – T
1x Flange bearing unit
1x Transmission unit

Order instruction:

- When adapting an hand-wheel or positioning-indicator a flange bearing unit is still required

Angular drive – L

- For 90° arrangement of the hand-wheel, EHL or unit drive LZ on an EP(X)-II linear unit

Scope of delivery:
Housing, 1 Plastic-bevel gear with adjusting ring, screws and closing caps

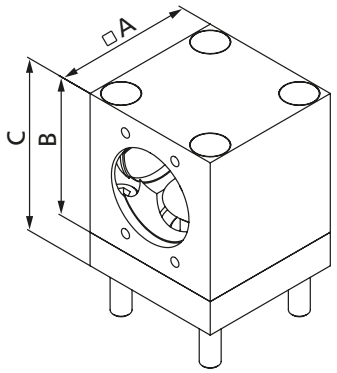

[mm]

Code No.	Type	i	A	B	C
91530F1F1A	30	1:1	52	52	61
91531F1F1A	40	1:1	62	62	77

Order instruction:

- When adapting an hand-wheel or positioning-indicator a flange bearing unit is still required

Angular drive – T

- For synchronization of two EP(X)-II linear units
- Suitable for manual adjustment, via EHL or unit drive LZ

Scope of delivery:
Housing, 2 Plastic-bevel gears with adjusting rings, screws and closing caps

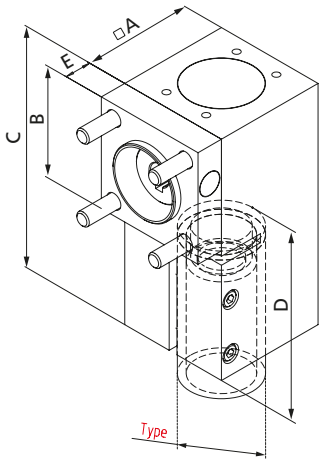

[mm]

Code No.	Type	i	A	B	C	D	E
91530G1F1A	30	1:1	52	52	102	39	9
91531G1F1A	40	1:1	62	62	134	55	15

Order instruction:

- When adapting an EHL or the unit drive LZ S, a motor adapter is still required

Flange bearing unit

- For adaptation of the hand-wheel or position indicator on the angular drive
- When adapting an EHL or the unit drive LZ S, a motor adapter is still required

Scope of delivery:
Housing, 1 Plastic-bevel gear with shim rings and screws

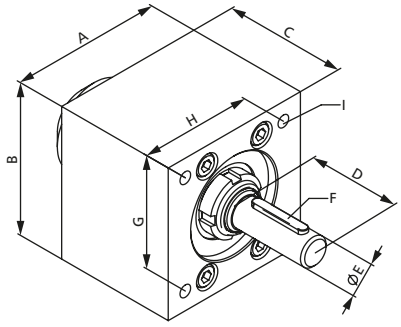

[mm]

Code No.	Type	A	B	C	D	E	F	G	H	I
91540H1F1A	30	52	52	40	24	8	2x2x20	30	40	4xM6-12 deep
91541H1F1A	40	62	62	50	38	12	4x4x25	46	46	4xM6-12 deep

Transmission unit

- For torque transmission with parallel linear units

Material:
Tube and bearing elements zinc plated steel, shaft bright

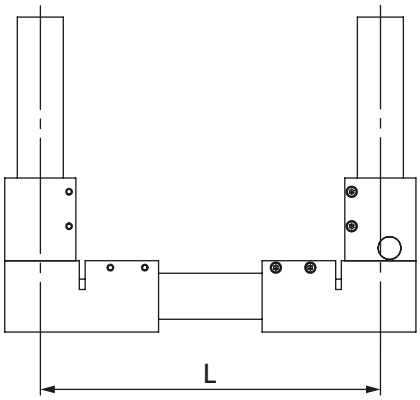

[mm]

Code No.	Type	Basic length (minimum length)	Max. length	Required length
92523_ _ _ _	30	160	3074	L – 74
92544_ _ _ _	40	210	3096	L – 96

Length [mm] <

Order instruction:

- When using angle drives, only use linear units with ball bearings

Angular drive

- Fits all EP(X)-II linear units 30-40
- No shaft extension or adapter necessary
- Can be retrofitted
- Low noise level
- **Suitable for adjustment with servo, stepper or three-phase motor**

Technical data angular drive

	For EP(X)-II 30–40	
Reduction		1:1
Drive speed	min^{-1}	0–350
Duty cycle		S3 30% Basis 1h
Efficiency at full load	%	System 1: 90 System 2–3: 81
Ambient temperature	°C	0 to +60

Angular drive for EP(X)-II

System 1

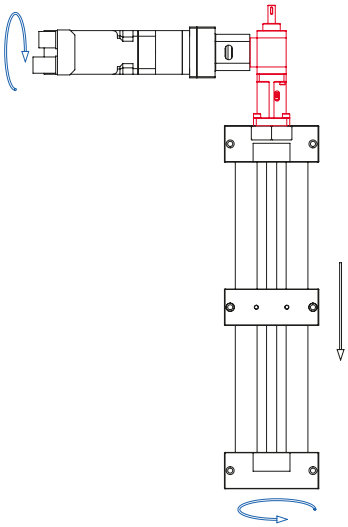

System 2

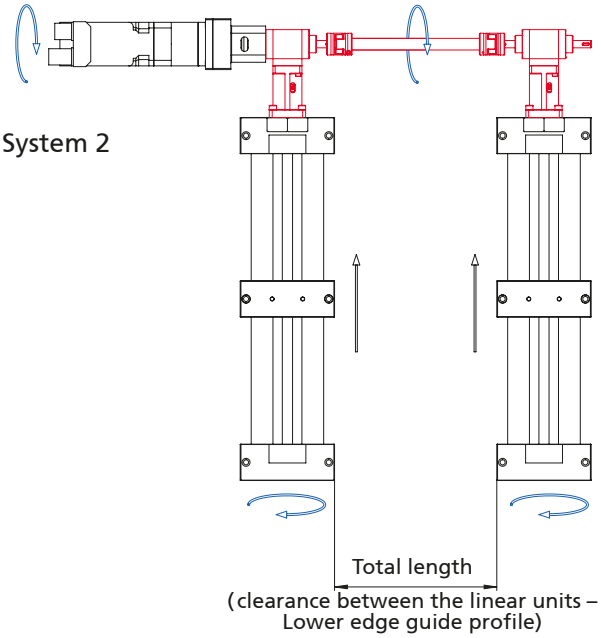

System 3

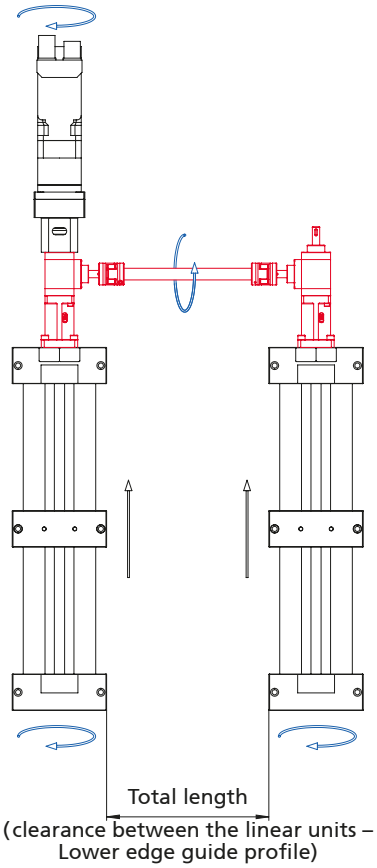

Code No.	Type	Size	Basic length (minimum length)	Max. length (clearance)	Weight [kg]	
					Basic length	per 100 mm travel
982_ _ C1A0000	Angular gear system 1	30	–	–	0,62	–
		40			1,59	
982_ _ C1B_ _ _ _	Angular gear system 2	30	53	2000	1,28	0,06
		40	69	2800	3,57	0,18
982_ _ C1C_ _ _ _	Angular gear system 3	30	53	2000	1,28	0,06
		40	91	2800	3,57	0,18

Total length (mm)

60 = EP(X)-II 30
61 = EP(X)-II 40

Selection table - motor adaptor/coupling EP(X) -II for three-phase motor

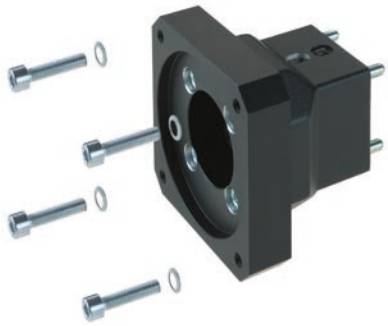

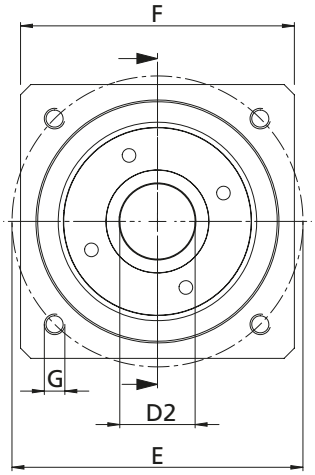

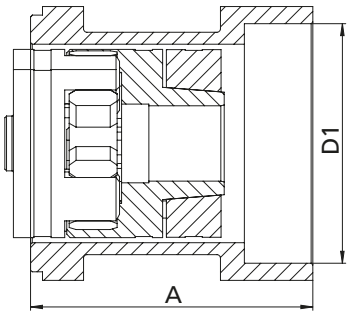

Manufacturers	Motor	EP(X)-II 30	EP(X)-II 40
RK Rose + Krieger	90/120W	949996	949614
		911940 0812	911430 1212
	180/250W	–	949414
		–	911430 1214

Code No. Motor adaptor:
949996

Code No. Coupling with specification of shaft diameter
1st end=08 mm
2st end=12 mm
911940 0812

Selection table - motor adaptor/coupling EP(X) -II for servo motors without gear

Manufacturers	Motor	EP(X)-II 30	EP(X)-II 40	Motor flange	A	D1	D2	E	F	G	Mass [kg]
RK Rose + Krieger	RK-AC 118	949200 911430 0811	949201 911430 1112	IM B5 56	64 / 74	Ø 60 H8 4,5 deep	Ø11 x 23	Ø 75	□70	M5 13 deep	0,53 / 0,65
	RK-AC 240	–	949221 911430 1214		83	Ø 80 H8 5,7 deep	Ø14 x 30	Ø 100	□90	M6 14,6 deep	0,73
Baumüller	DSD2-036	949200 911430 0811	949201 911430 1112	IM B5 56	64 / 74	Ø 60 H8 4,5 deep	Ø11 x 23	Ø 75	□70	M5 13 deep	0,53 / 0,65
	DSD2-045	–	949221 911430 1214		83	Ø 80 H8 5,7 deep	Ø14 x 30	Ø 100	□90	M6 14,6 deep	0,73
Beckhoff	AM8031, AM8032, AM8033	On request	On request	IM B5 56			Ø14 x 30				
	AM8041, AM8042, AM8043	–					Ø19 x 40				
Bosch	MSK040B, MSK040C, MSK043C	–	On request	–			Ø14 x 30				
Kollmorgen	AKM2G-31, AKM2G-32, AKM2G-33, AKM2G-34	On request	On request	IM B5 56			Ø14 x 30				
	AKM2G-41, AKM2G-42, AKM2G-43, AKM2G-44	–					Ø19 x 40				
Lenze	MCS06I, MCS06F	949200 911430 0811	949201 911430 1112	IM B5 56	64 / 74	Ø 60 H8 4,5 deep	Ø11 x 23	Ø 75	□70	M5 13 deep	0,53 / 0,65
	MCS09D, MCS09F, MCS09H, MCS09L	–	949221 911430 1214		83	Ø 80 H8 5,7 deep	Ø14 x 30	Ø 100	□90	M6 14,6 deep	0,73
Mitsubishi	HG-JR53,(4), HG-JR 73(4), HG-JR103(4), HG-JR153(4), HG-JR203(4)	On request	On request	IM B5 56			Ø16 x 40				
Parker	SMH 60, SMHA 60	949200 911430 0811	949201 911430 1112	IM B5 56	64 / 74	Ø 60 H8 4,5 deep	Ø11 x 23	Ø 75	□70	M5 13 deep	0,53 / 0,65
	SMH 82, SMHA 82	–	949221 911430 1214		83	Ø 80 H8 5,7 deep	Ø14 x 30	Ø 100	□90	M6 14,6 deep	0,73
SEW	CMP50S, CMP50M, CMP50L	949200 911430 0811	949201 911430 1112	IM B5 56	64 / 74	Ø 60 H8 4,5 deep	Ø11 x 23	Ø 75	□70	M5 13 deep	0,53 / 0,65
	CMP63S, CMP63M, CPM63L	–	949221 911430 1214		83	Ø 80 H8 5,7 deep	Ø14 x 30	Ø 100	□90	M6 14,6 deep	0,73
Siemens	1FK7032, 1FK7033, 1FK7034	On request	On request	IM B5 56			Ø14 x 30				
	1FK7040, 1FK042, 1FK043, 1FK2205	–					Ø19 x 40				

Code No. Motor adaptor:
949221

Code No. Coupling with specification of shaft diameter
1st end=12 mm
2st end=14 mm
911430 1214

For dimensions and order data for motor adaptor and coupling, please refer to next page.

Note:
For further details on motor versions, please refer to the chapter "Motors and controls"

Motor adaptor

- Simple assembly
- Exact fit due to centering shoulders

Material: Aluminium

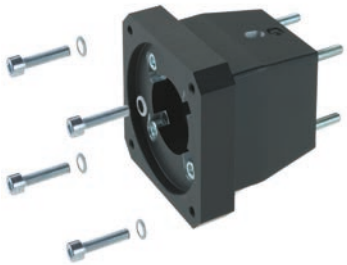

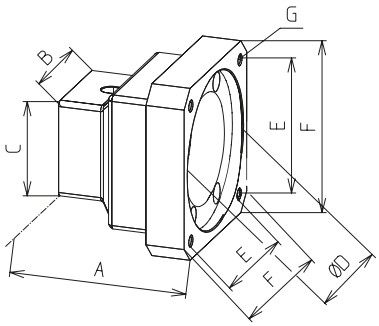

[mm]

Code No.	Type	A	B	C	D	E	F	G
949200	30	64	53,5	53,5	60	53	70	M5
949996	30	64	53,5	53,5	50	65	80	M5
949201	40	74	60	60	60	53	70	M5
949221	40	83	60	60	80	70,7	90	M6
949614	40	83	60	60	50	46	80	M5
949414	40	83	60	60	80	100	Ø120	Ø6,6

Motor adaptor for EHL

Linear unit connection

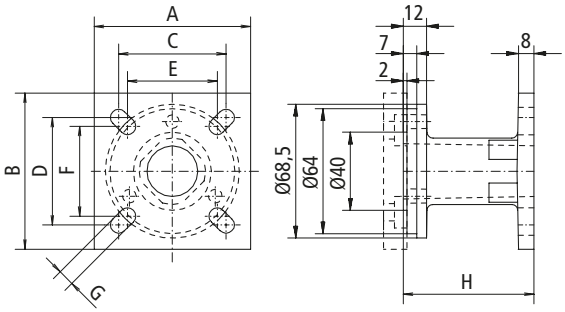

EHL connection

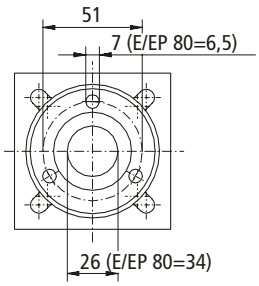

[mm]

Code No.	for linear unit	PinØ unit	A	B	C	D	E	F	G	H	L	Ø
92667	EP(X)-II 30	8	50	50	30	40	30	30	6	67	–	–
92668	EP(X)-II 40	12	60	60	46	46	36	36	7	67	–	–

Motor adaptor for LZ S/P linear units

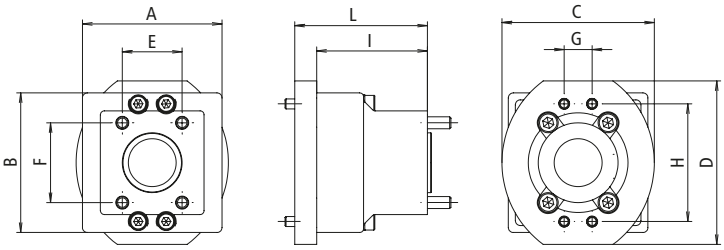

[mm]

Linear unit	LZ S Code No.	LZ P Code No.	Coupling Code No.	A	B	C	D	E	F	G	H	I	L
EP(X)-II 30	949711		9109200810	70	70	76.4	82	30	40	14	59	55.5	66.5
EP(X)-II 40	949713		9114301012	70	70	76.4	82	46	46	52.3	52.3	73.5	81.5

Coupling

- Small size
- Shaft connection without backlash
- Maintenance-free
- Easy plug-in assembly

Material: Hub – aluminium
Gear ring – polyurethane

To ensure the smooth running of the coupling, a clearance of **D+3 mm** is required.

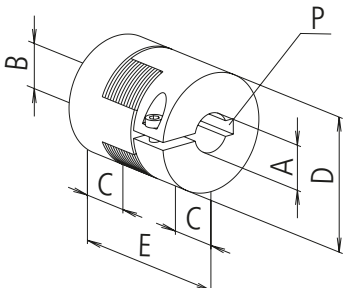

[mm]

Code No.	A	B	C	D	E	P	Torque [Nm] with feather key	Torque [Nm] without feather key
9109200895	8	9,5	10	20	30	2x2 / –	5	3
9114300811	8	11	11	30	35	2x2 / 4x4	12	6
9114300816	8	16	11	30	35	2x2 / 5x5	12	6
9114309512	9,5	12	11	30	35	– / 4x4	12	6
9114301112	11	12	11	30	35	4x4 / 4x4	12	6
9114301212	12	12	11	30	35	4x4 / 4x4	12	6
9114301214	12	14	11	30	35	4x4 / 5x5	12	6
9114301216	12	16	11	30	35	4x4 / 5x5	12	6
9119400812	08	12	25	40	65	2x2 / 4x4	17	10

Further information for adaption and drives see catalogue linear technology, chapter motors & controls from page 559

Motor adapter kits on angular gear

- Three-phase- or servomotors with gear from popular manufacturers can be easily connected
- Complete motor adapter kits manufactured to your specifications on request

Scope of delivery:
Motor adapter kit, servo coupling with zero backlash and fixation material

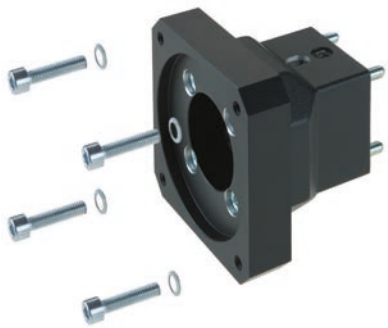

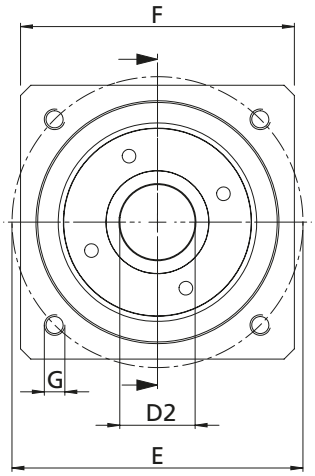

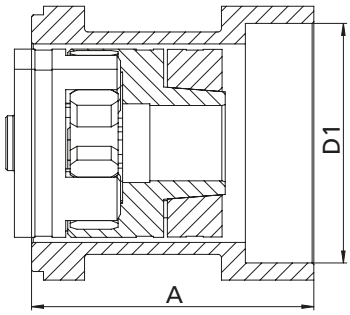

Selection table motor adapter kits for three-phase motor

Manufacturers	Motor	Angular gear system 1-3 EP(X)-II 30 TR	Angular gear system 1-3 EP(X)-II 40 TR	A	D1	D2	E	F	G	Mass [kg]
RK Rose + Krieger	90/120W	949766	949769	78 / 75,4	Ø 50^{H8} 3 deep / 4 deep	Ø 12 x 30	Ø 65	Ø 80	M5 - 15 deep	0,55 / 0,52

Selection table motor adapter kits servo motors with gear

Manufacturers	Gear	Angular gear system 1-3 EP(X)-II 30 TR	Angular gear system 1-3 EP(X)-II 40 TR	A	D1	D2	E	F	G	Mass [kg]
Neugart	PLE 60	949768	949771	82,9 / 80,4	Ø 40^{H7} 3 deep / 4 deep	Ø 14 x 30	Ø 52	□70 / Ø 62	Ø 5,5	0,58 / 0,25
Eppinger	PE065	949768	949771	82,9 / 80,4	Ø 40^{H7} 3 deep / 4 deep	Ø 14 x 30	Ø 52	□70 / Ø 62	Ø 5,5	0,58 / 0,25
Ruhrgetriebe	RPS060	949768	949771	82,9 / 80,4	Ø 40^{H7} 3 deep / 4 deep	Ø 14 x 30	Ø 52	□70 / Ø 62	Ø 5,5	0,58 / 0,25
SPN Schwaben Präzision	SPN-ECO (E2) EZ 23	949768	949771	82,9 / 80,4	Ø 40^{H7} 3 deep / 4 deep	Ø 14 x 30	Ø 52	□70 / Ø 62	Ø 5,5	0,58 / 0,25
Wittenstein	Alpha CP015 MF	949768	949771	82,9 / 80,4	Ø 40^{H7} 3 deep / 4 deep	Ø 14 x 30	Ø 52	□70 / Ø 62	Ø 5,5	0,58 / 0,25

Selection table motor adapter kits for motors with NEMA-Flange

Manufacturers	Motor	Angular gear system 1-3 EP(X)-II 30 TR	Angular gear system 1-3 EP(X)-II 40 TR	Motor-flange	A	D1	D2	E	F	G	Mass [kg]
RK Rose + Krieger	Stepper motor PD6S	949767	949770	NEMA 34	84,9/82,4	Ø 73^{H8} 4 deep/3 deep	Ø 14 x 35	□ 69,5	□ 86	M6 - 15 deep	0,76/0,75
Various	All motors with NEMA 34 motor flange	949767	949770	NEMA 34	84,9/82,4	Ø 73^{H8} 4 deep/3 deep	Ø 14 x 35	□ 69,5	□ 86	M6 - 15 deep	0,76/0,75

Selection table motor adapter kits servo motors without gear

Manufacturers	Motor	Angular gear system system 1 + 4 EPX-II 30/40 KG	Angular gear system system 2 + 3 EPX-II 30/40 KG	Motor-flange	A	D1	D2	E	F	G	Mass [kg]
RK Rose + Krieger	RK-AC 240	949130	949139	IM B5 56	99/94	Ø 80 ^{H8} 4 deep	Ø14x30	Ø 100	□82	M6 12 deep	0,86
	RK-AC 470	949131	949140	IM B5 63	109/104	Ø 95 ^{H8} 4 deep	Ø19x40	Ø 115	□100	M8 22 deep	1,2
Baumüller	DSD2-045	On request	On request	IM B5 56			Ø14x30				
Beckhoff	AM8041, AM8042, AM8043	On request	On request	IM B5 56			Ø19x40				
Bosch	MSK040B, MSK040C, MSK043C	On request	On request	–			Ø14x30				
	MSK050B, MSK050C	949131	949140	IM B5 63	109/104	Ø 95 ^{H8} 4 deep	Ø19x40	Ø 115	□100	M8 22 deep	1,2
Kollmorgen	AKM2G-41, AKM2G-42, AKM2G-43, AKM2G-44	On request	On request	IM B5 56			Ø19x40				
Lenze	MCS09D, MCS09F, MCS09H, MCS09L	949130	949139	IM B5 56	99/94	Ø 80 ^{H8} 4 deep	Ø14x30	Ø 100	□82	M6 12 deep	0,86
Lti/Keba	LSP10	949131	949140	IM B5 63	109/104	Ø 95 ^{H8} 4 deep	Ø19x40	Ø 115	□100	M8 22 deep	1,2
Mitsubishi	HG-JR53(4), HG-JR 73(4), HG-JR103(4), HG-JR153(4), HG-JR203(4)	On request	On request	IM B5 56			Ø16x40				
Parker	SMH 82, SMHA 82	949130	949139	IM B5 56	99/94	Ø 80 ^{H8} 4 deep	Ø14x30	Ø 100	□82	M6 12 deep	0,86
	SMH 100, SMHA 100	949131	949140	IM B5 63	109/104	Ø 95 ^{H8} 4 deep	Ø19x40	Ø 115	□100	M8 2 deep	1,2
SEW	CMP63S, CMP63M, CPM63L	949130	949139	IM B5 56	99/94	Ø 80 ^{H8} 4 deep	Ø14x30	Ø 100	□82	M6 12 deep	0,86
Siemens	1FK7040, 1FK042, 1FK043, 1FK2205	On request	On request	IM B5 56			Ø19x40				
	1FK2105	949131	949140	IM B5 63	109/104	Ø 95 ^{H8} 4 deep	Ø19x40	Ø 115	□100	M8 22 deep	1,2

Positioning indicator

- Permitted ambient temperature +80°C
- Figure height 6 mm
- Reading accuracy ± 0.1 mm
- If positioning indicators are fitted, the linear units are delivered exclusively with ball bearings

Material: Housing polyamide 6 Orange RAL 2004,
Steel parts corrosion-protected

Scope of delivery: Positioning indicator, clamping ring, shaft extension and fastenings

Note: "rising" and "falling" versions refer to the clockwise rotation of the drive shaft.

Installation position: horizontal

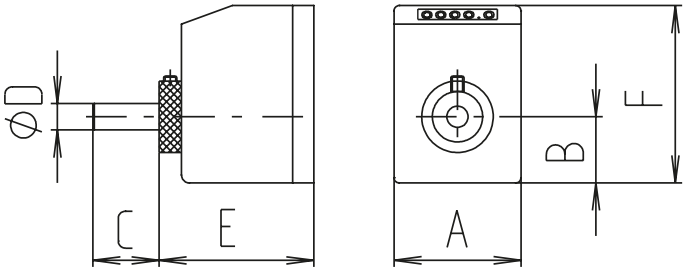

Installation position: vertical

[mm]

Type	Installation position	Code No.	Version	Code No.	Version*	A	B	C	D	E	F
30	Horizontal	91043	3 mm rising	91010	6 mm rising	48	25	18	8	59	67
30		91053	3 mm falling	91029	6 mm falling	48	25	18	8	59	67
30	Vertical	91063	3 mm rising	91020	6 mm rising	48	25	18	8	59	67
30		91073	3 mm falling	91019	6 mm falling	48	25	18	8	59	67
40	Horizontal	91004	4 mm rising	91030	8 mm rising	48	25	38	12	59	67
40		91014	4 mm falling	91039	8 mm falling	48	25	38	12	59	67
40	Vertical	91024	4 mm rising	91040	8 mm rising	48	25	38	12	59	67
40		91034	4 mm falling	91041	8 mm falling	48	25	38	12	59	67

* Version with double lead e.g. for installation on righthand/lefthand thread screws

Holder for inductive limit

- Limit switch can be moved and fixed axially

Type 30 – 40

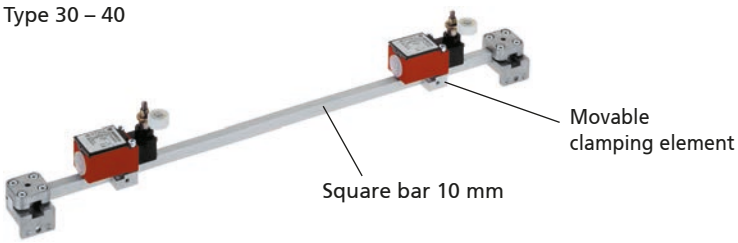

Type	30 – 40
Max. voltage	250 V AC
Max. switching current	6 A
Max. starting current	16 A
Lifetime	10 million switching cycles
Axis lever adjustment	locking at 10° increments
Protection rating	IP 65
Ambient temperature	-30°C to +80°C

Code No.	Type	Basic length	Version
92961_ _ _ _	30 – 40	245	with switch
92962_ _ _ _	30 – 40	245	without switch

Total length of linear unit

Mechanical limit switch

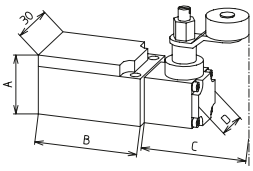

[mm]

Code No.	Type	Switching function	A	B	C	D
91905	30 – 40	NC contact / NO contact	26.5	45	45.5	21

- Limit switch can be moved and fixed axially

Type 30 – 40

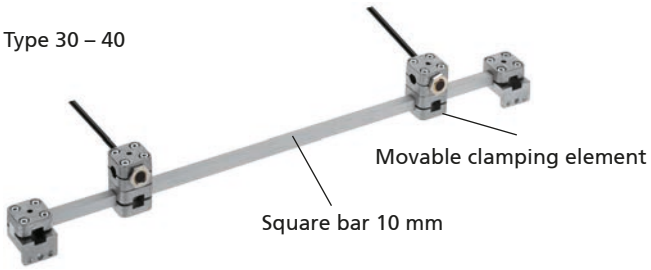

Type	30 – 40
Voltage	10 - 30 V DC
Max. switching current	200 mA
Operating distance	4 mm for steel
Protection rating	IP 67
Ambient temperature	-25°C to +70°C
Cable lengths	2m

Code No.	Type	Basic length	Version
92965_ _ _ _	30 – 40	125	without switch

Total length of linear unit

Inductive limit switch

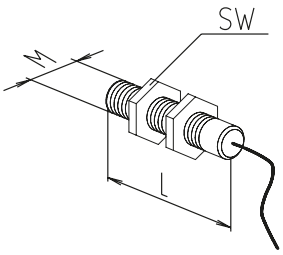

[mm]

Code No.	Type	Switching function	L	M	Wrench size (SW)
92825	30 – 40	Changeover	50	12x1	17