Ball rail actuator/guide – MultiLine / R

Compact ball rail actuator for high loads

Carriage with ball rail guide
- ✓ Exact and precise running
- ✓ Supports high forces and moments

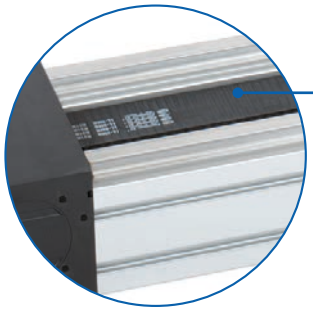

Wide timing-belt (60 mm)
- ✓ Supports high axial forces

Fixing slots in the guide profile
- ✓ Simple connection of accessories
- ✓ Excellent fixing of unit

Tapered lubricating nipple
- ✓ Central lubricating access on the carriage facilitates maintenance

Configuration of drive shaft
- ✓ Freely configurable acc. to your requirements

Features:

- Guide profile 100 x 200 compatible with BLOCAN® profile system
- Durable ball rail guide
- Flat and compact design

Options:

- Longer stroke lengths
- Second non driven carriage
- Extended carriage

MultiLine / R – Table of contents

Properties/Technical data

- General information/operating conditions ... 388
- Load data ... 388

Versions
(Dimensions, order numbers)

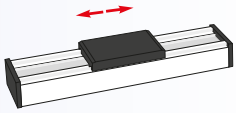

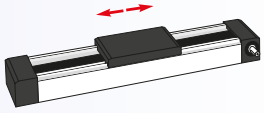

- MultiLine R guide unit ... 390
- MultiLine timing-belt unit ... 392
- Safelock MultiLine timing-belt unit ... 364

Accessories

Fixing

- Slot stones ... 396

Drive

- Transmission unit ... 397
- Motor adaptor/couplings ... 400

Position determination

- Limit switches ... 401

General information/operating conditions

	MultiLine
Design	Aluminium profile, timing-belt drive
Guidance system	2 parallel ball rails, external
Installation position	Any position
Max. input torque [Nm]	161
Max. speed [m/s]	5
Max. acceleration [m/s^2]	50
Repeatability	± 0,05 mm
Pitch accuracy toothed belt	± 0,1 mm/300 mm travel
No-load torque [Nm]	3,8
Drive	GT-Toothed belt, Pitch 8 mm, Width 60 mm
Eff. diam. of pulley [mm]	68,75,
Pulley wheel circumference	216
Ambient temperature	0°C to +60°C
Protection class	IP 20

Dynamic load data

F Force [N]

M Moment [Nm]

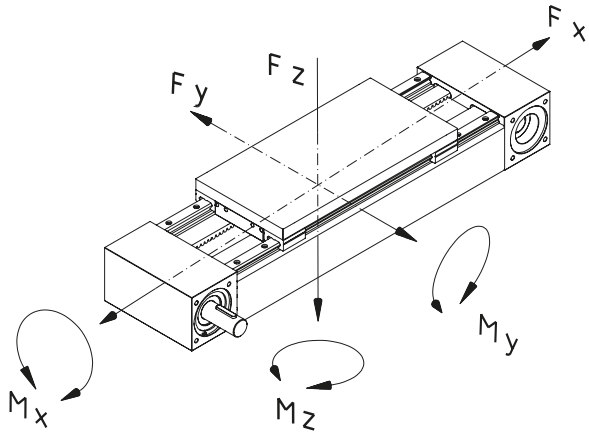

Type	Fx*	Fy	Fz	Mx	My	Mz
MultiLine (Ball rail system)						
MultiLine R	–	8200	12000	920	1600	1500
MultiLine with external timing-belt						
MultiLine	4700	8200	12000	920	1600	1500

* Initial tension of the timing belt 0,8 x Fx

Geometric moment of inertia

[cm^4]

Type	Iy	Iz
MultiLine	630,85	2643,85

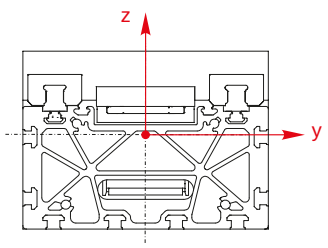

Calculation of the load characteristic to define the lifetime

- The lifetime of linear units are in accordance with the average loads and moments of an application. The load characteristic can approximately calculated by following equation with simultaneously appearing load and moments.

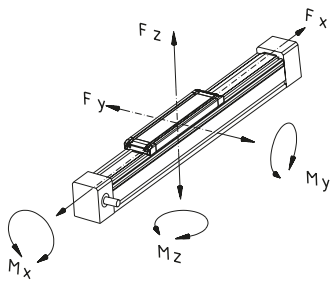

$$\text{Load characteristic} = \frac{\text{Application values (z.B. Fy)}}{\text{Catalog values (z.B. } Fy_{max})}$$

$$\textbf{Load characteristic } B_K = \frac{Fy}{Fy_{max}} + \frac{Fz}{Fz_{max}} + \frac{Mx}{Mx_{max}} + \frac{My}{My_{max}} + \frac{Mz}{Mz_{max}} \leq 1$$

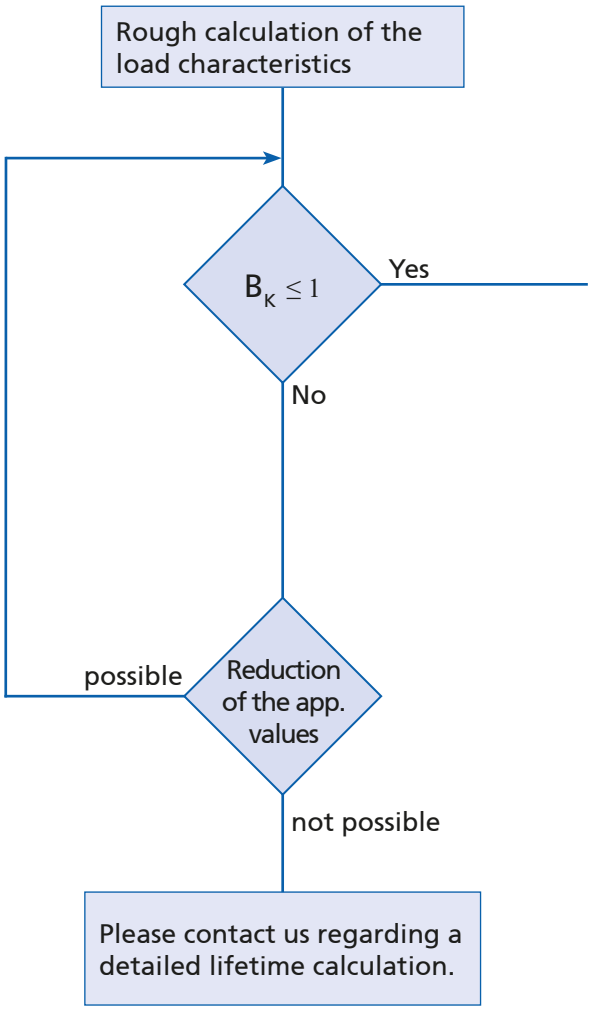

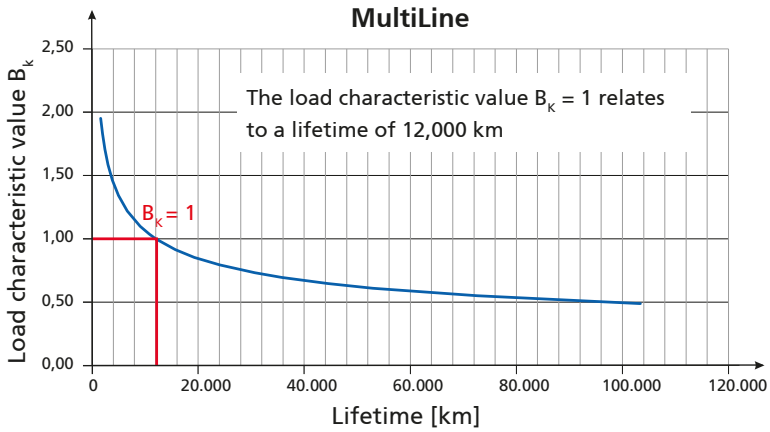

At a load characteristic value of $B_K < 1$ higher theoretical lifetime can be achieved.

The illustration is intended as an approximate reflection of the expected lifetime depending on the load characteristic value B_K.

Increased speeds, short-stroke, vibrations, impacts, insufficient lubrication or other specific conditions are not taken into account.

Please contact us regarding a detailed lifetime calculation.

Example:

✓ The load and moments of the application are:
Fz = 2000N, Mx = 200 Nm und Mz = 450 Nm

According to the above equation you will have following load characteristic of a MultiLine: B_K = 0.76.

Order instructions:

- Longer travel lengths on request
- Second or extended carriage available on request

Version ■ **Guide**

[mm]

Code No.	Type	Basic length	Max. travel	Mass [kg]	
				Basic length	per 100 mm travel
MSA2010IA	Ball rail system	420	5620	31.11	2.00

_ _ _ _ Total length = basic length + travel [mm]

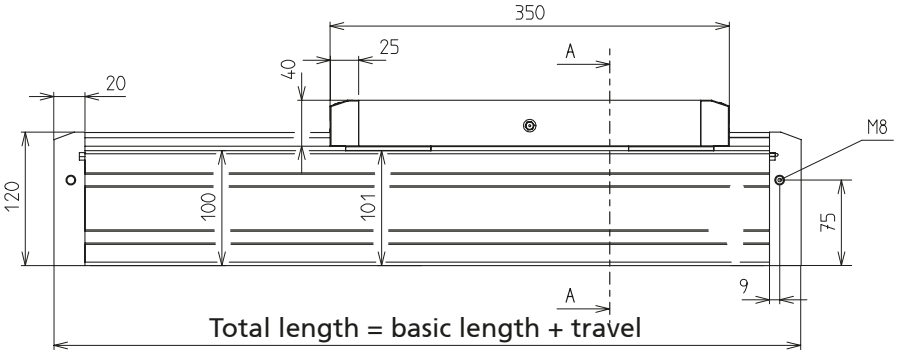
350
25
A
40
20
M8
120
100
101
75
9
A
Total length = basic length + travel

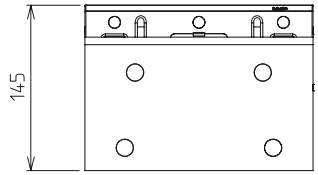
145

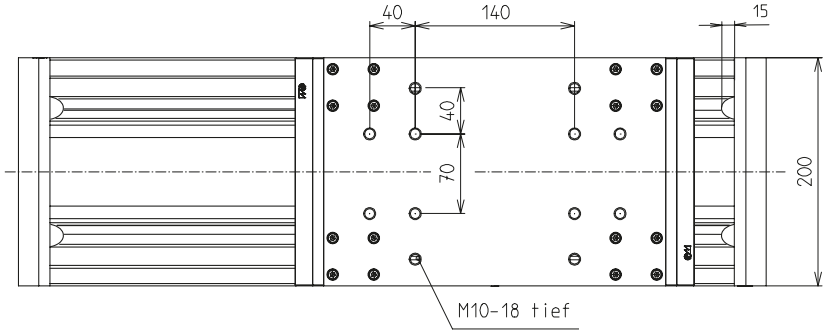
40
140
15
40
70
200
M10-18 tief

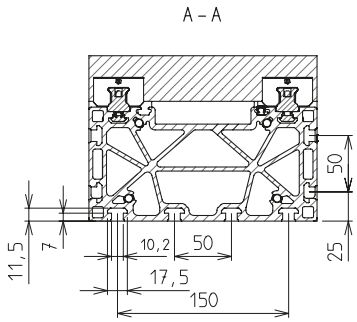
A – A
50
11,5
7
10,2
50
25
17,5
150

Order instructions:

- Longer travel lengths on request
- Second non driven or extended carriage available on request

Version ■ **Timing-belt unit**

[mm]

Code No.	Type	Toothed belt	Basic length	Max. travel	Mass [kg]	
					Basic length	per 100 mm travel
TAA2010 _ I	Ball rail system	8 M60	550	5620	29.90	2.05

_ _ _ _ Total length = basic length + travel [mm]

Configuration of drive shaft

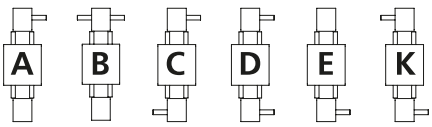

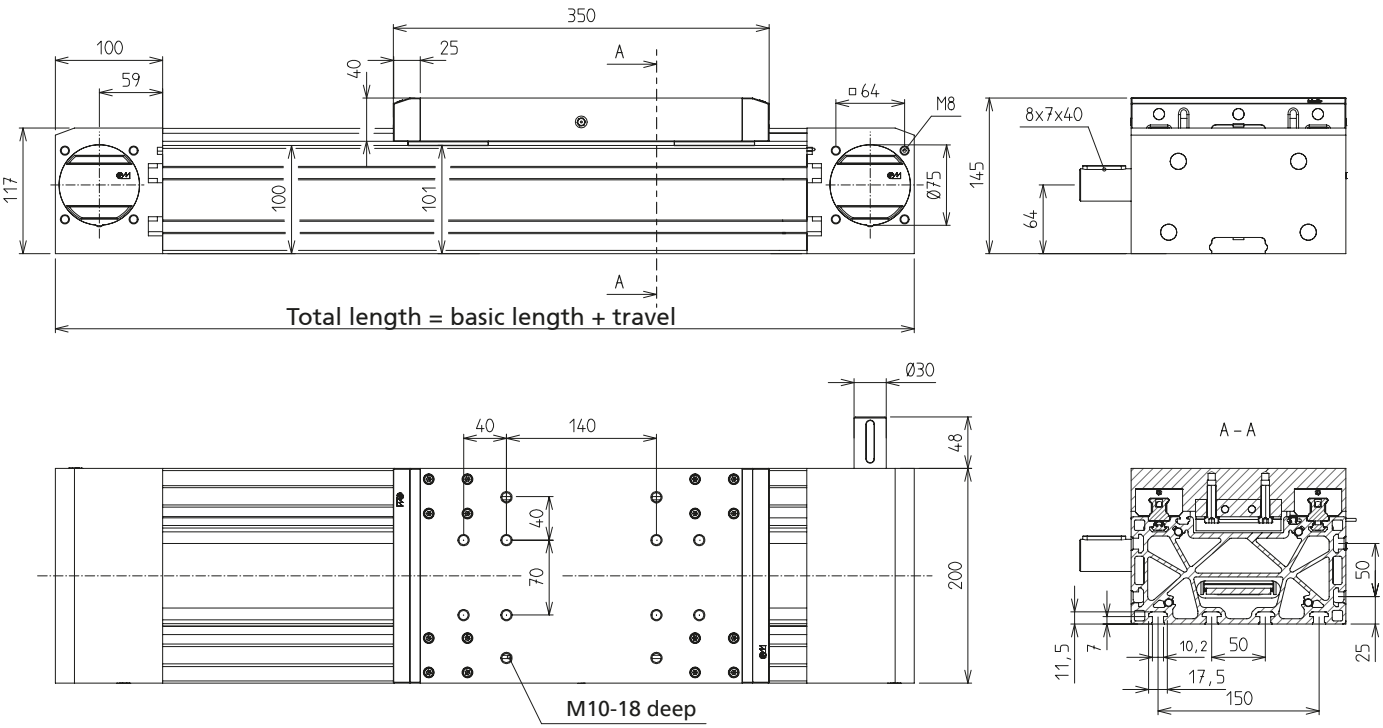
350
100
59
25
40
A
□ 64
M8
8x7x40
117
100
101
Ø75
145
64
A
Total length = basic length + travel
Ø30
40
140
48
40
70
200
M10-18 deep
A – A
50
11,5
7
10,2
50
25
17,5
150

Order information:

- Longer travel lengths on request
- Also available without toothed-belt drive as a torque support

[mm]

Code No.	Type	Basic length	Max. travel	Mass [kg]	
				Basic length	per 100 mm travel
TA_2010AI_ _ _ _	RK MultiLine Safelock	650	3506	31	2.05

Total length (basic length + travel) in mm

Version:
Q = Motor at top / Profile moves
L = Motor at top / Carriage moves
T = Motor at bottom / Carriage moves

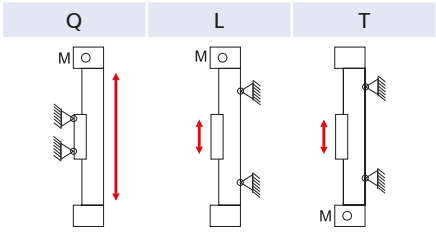

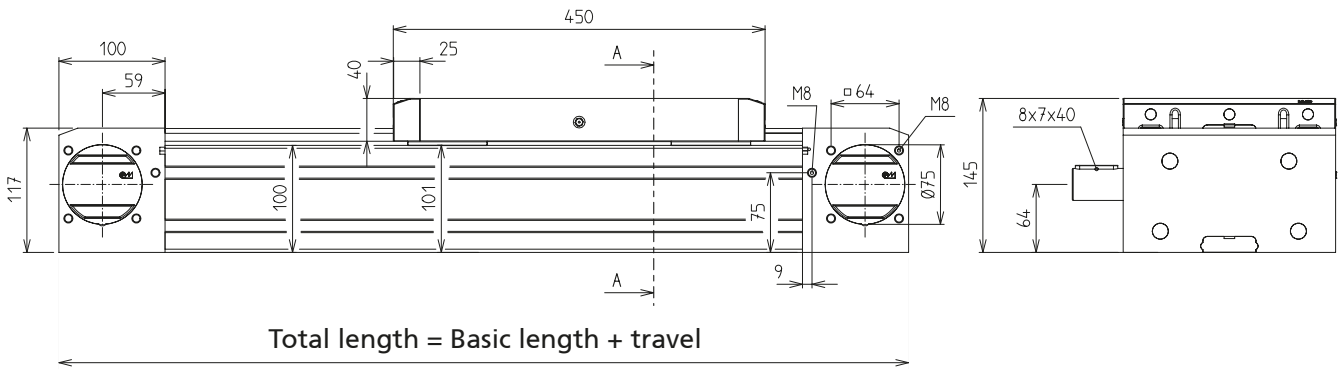
450
100
59
25
40
A
M8
□64
M8
8x7x40
117
100
101
75
Ø75
145
64
9
A
Total length = Basic length + travel

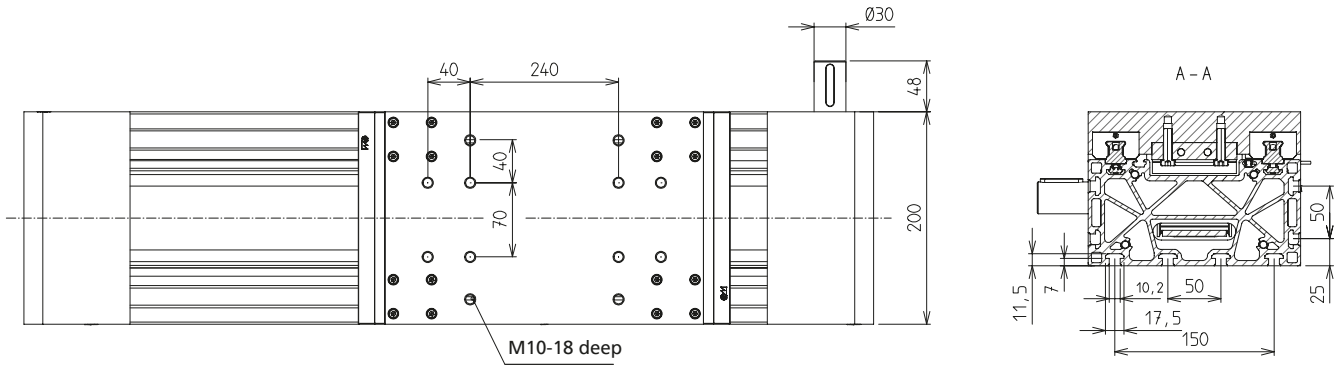
Ø30
40
240
48
40
70
200
M10-18 deep
A – A
50
11,5
7
10,2
50
25
17,5
150

Order instruction:

- **Purchase only in lot sizes and a multiple of that, see product table below**

- Slot stones can be inserted and positioned at the guide profile and carriage

Material: zinc plated steel

Slot stones

Slot stone -N-

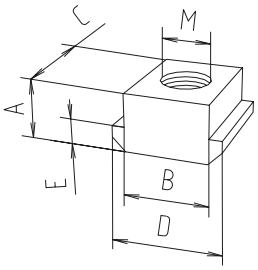

Slot stone -N-
can be slid into the slot

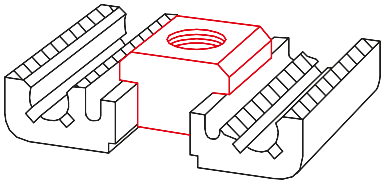

Slot stone -K-

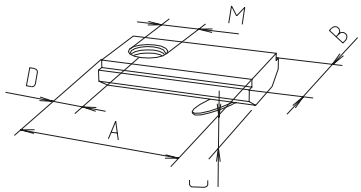

Slot stone -K-
can be swivelled into the slot

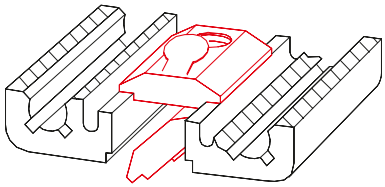

[mm]

Code No.	Version	lot sizes	A	B	C	D	E	M	F [N]
Slot stone -N-									
4026207	M5	10, 20, 30... pcs	8	10	13	15	4	M5	4000
4026203	M6	10, 20, 30... pcs	8	10	13	15	4	M6	9000
4026206	M8	10, 20, 30... pcs	8	10	13	15	4	M8	9000
Slot stone -K-									
4016212	M6	10, 20, 30... pcs	21	14	4	7	–	M6	5000
4016213	M8	10, 20, 30... pcs	21	14	4	7	–	M8	8000

RK ROSE+KRIEGER

Transmission unit

- Transmission of high torques up to 120 Nm on parallel linear units
- Synchronisation of carriages via zero point alignment

Synchronous version

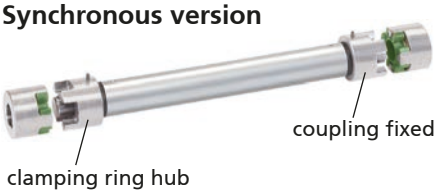

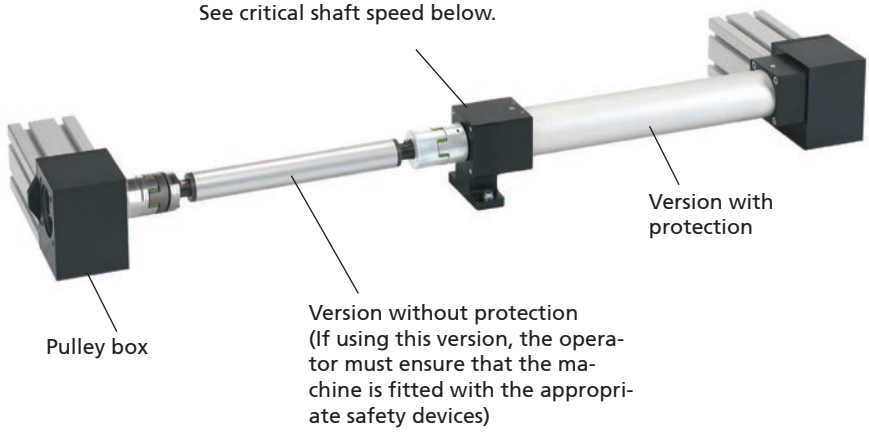

Critical shaft speed:

max. unsupported length [mm] = (2720 - speed [rpm]) + 2 x 107.5

max. speed [rpm] = 2720 - L [mm]

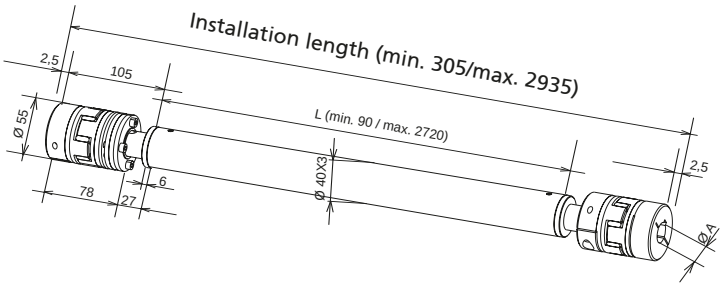

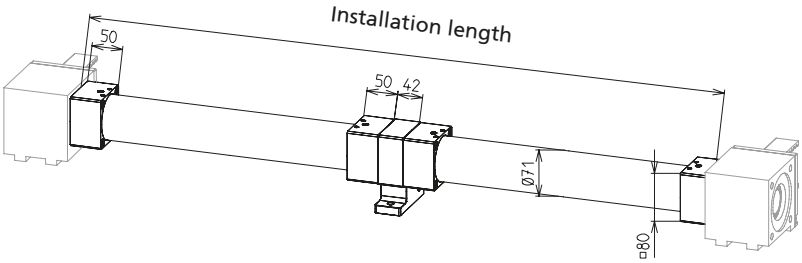

[mm]

Code No.	Version	for linear unit	A [mm]	Weight [kg]		
				1000 mm	/100 mm	Pedestal bearing support
9252052 _ _ _ _	Without protection	MultiLine	30	5.23	0.23	1.7
9252152 _ _ _ _	With protection	MultiLine	30	8.56	0.4	1.7

Installation length [mm]

2 = without pedestal bearing support
3 = with pedestal bearing support

Selection table Motor adaptor/MultiLine coupling for three-phase motor

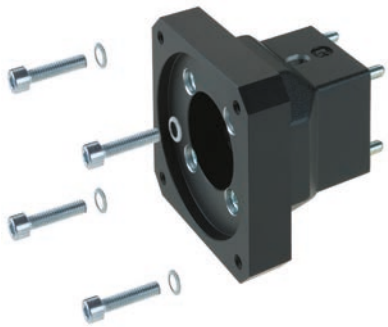

Manufacturers	Motor	MultiLine
RK Rose + Krieger	90/120W	949968
		912855 1230
	180/250W	949969
		912855 1430

Selection table Motor adaptor/MultiLine coupling for servomotors without gear

Manufacturers	Motor	MultiLine	Motor flange	Motor shaft
RK Rose + Krieger	RK-AC 240	949962	IM B5 56	Ø14x30
		912855 1430		
	RK-AC 470	949964	IM B5 63	Ø19x40
		912855 1930		
Baumüller	DSD2-045	949962	IM B5 56	Ø14x30
		912855 1430		
Bosch	MSK050B, MSK050C	949964	IM B5 63	Ø19x40
		912855 1930		
Lenze	MCS09D, MCS09F, MCS09H, MCS09L	949962	IM B5 56	Ø14x30
		912855 1430		
Lti / Keba	LSP10	949964	IM B5 63	Ø19x40
		912855 1930		
Parker	SMH 82, SMHA 82	949962	IM B5 56	Ø14x30
		912855 1430		
	SMH 100, SMHA 100	949964	IM B5 63	Ø19x40
		912855 1930		
SEW	CMP63S, CMP63M, CPM63L	949962	IM B5 56	Ø14x30
		912855 1430		
Siemens	1FK2105	949964	IM B5 63	Ø19x40
		912855 1930		

↓

Code No. Motor adaptor:
949964

Code No. Coupling with specification of shaft diameter
1st end=19 mm
2st end=30 mm:
912855 1930

RK ROSE+KRIEGER

Selection table Motor adaptor/MultiLine coupling for servomotors with gear

Manufacturers	Gear	MultiLine Z	Motor shaft
Neugart	PLE 60	949446 912855 1430	Ø14x30
	PLE 80	949447 912855 2030	Ø20x36
	PLE 120	949448 912855 2530	Ø25x50
Atlanta	APG080	949447 912855 2030	Ø20x36
	APG120	949448 912855 2530	Ø25x50
Eppinger	PE065	949446 912855 1430	Ø14x30
	PE080	949447 912855 2030	Ø20x36
Ruhrgetriebe	RPS060	949446 912855 1430	Ø14x30
	RPS080	949447 912855 2030	Ø20x36
SPN Schwaben Präzision	SPN-ECO (E2) EZ 23	949446 912855 1430	Ø14x30
	SPN-ECO (E2) EZ 24	949447 912855 2030	Ø20x36
	SPN-ECO (E2) EZ 25	949448 912855 2530	Ø25x50
Wittenstein	Alpha CP015 MF	949446 912855 1430	Ø14x30
	Alpha CP025 MF	949447 912855 2030	Ø20x36
	Alpha CP035 MF	949448 912855 2530	Ø25x50

Code No. Motor adaptor:
949448

Code No. Coupling with specification of shaft diameter
1st end=25 mm
2st end=30 mm:
912855 2530

For dimensions and order data for motor adaptor and coupling, please refer to next page.

Note:
For further details on motor versions, please refer to the chapter "Motors and controls"

Motor adaptor

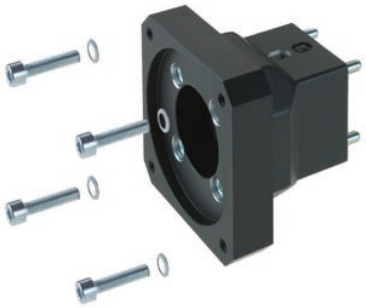

- Simple assembly
- Exact fit due to centering shoulders

Material: Aluminium, black anodised

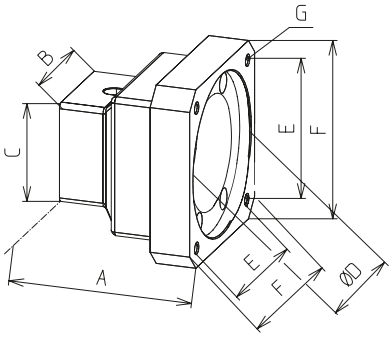

[mm]

Code No.	A	B	C	D	E	F	G
949446	112	80	80	40	53	70	Ø5,5
949962	99	80	80	80	70,7	90	M6
949447	106	80	80	60	70,7	90	Ø6,6
949448	120	80	80	80	91,9	115	Ø9
949964	106	80	80	95	81,3	115	M8
949968	99	80	80	50	46	80	M5
949969	99	80	80	80	100	Ø120	Ø6,6

Coupling

- Shaft connection without backlash
- Easy plug-in assembly

Material: Aluminium hub, polyurethane gear ring

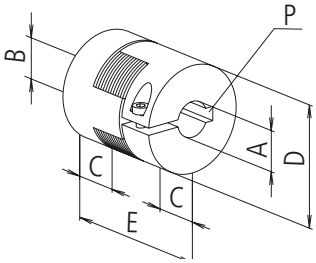

[mm]

Code No.	ØA	ØB	C	D	E	P	Torque [Nm] with feather key	Torque [Nm] without feather key
9128551430	14	30	30	55	78	5x5 / 8x7	60	35
9128551930	19	30	30	55	78	6x6 / 8x7	60	35

Bracket for mechanical limit switch

- Limit switch with angle lever
- Compact design

Material: Limit switch housing made of thermoplastic, self-extinguishing, bracket made of aluminium profile

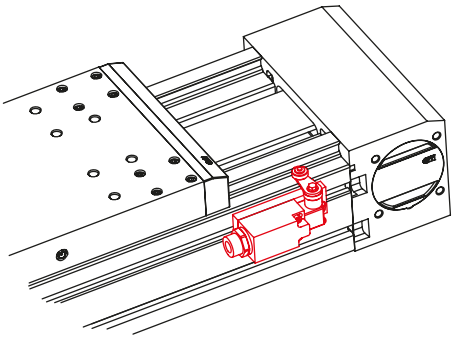

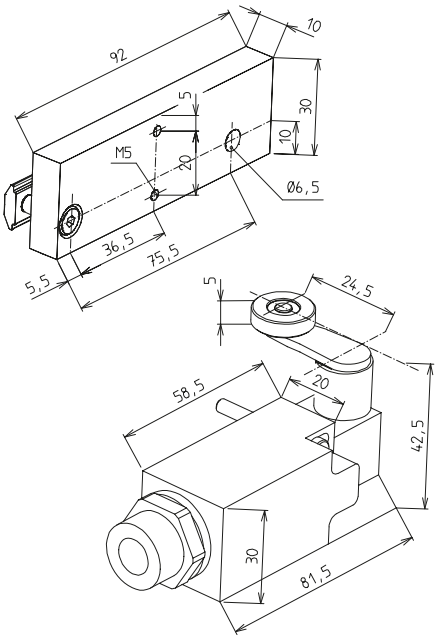

[mm]

Max. voltage	230 V AC
Max. switching current	4 A
Max. starting current	10 A
Operating cycles	Max. 5,000/h
Mechanical lifetime	20 x 10^6 switching cycles
Axis lever adjustment	locking by 360°
Protection class	IP 67
Ambient temperature	-30°C to +80°C

Code No.	Type
92711	Limit switch NC/NO with bracket

Bracket for inductive limit switch

- Fixing in the profile slot of the guide profile
- Function indicator
- Maintenance-free

Material: Limit switch housing made of stainless steel, bracket made of aluminium

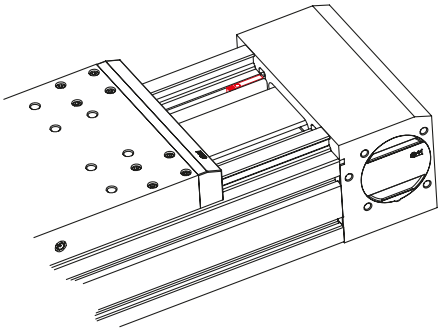

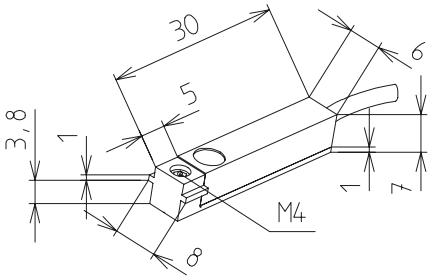

Voltage	10-30 V DC
Max. switching current	10 mA
Max. starting current	100 mA
Operating frequency	Max. 5 kHz
Mechanical lifetime	independent of operating cycles
Operating distance	1.5 mm
Protection class	IP 67
Ambient temperature	-25°C to +70°C

Code No.	Type
92929	Limit switch NC, with bracket